ORD NO.	DATE PASSED	DATE PUBLISHED	"CODE OF '84" PAGES DISTR'D	SUBJECT
1635	12/16/96	12/24/96	N/A	AN ORD. AMENDING THE LEAWOOD DEVELOPMENT ORDINANCE RELATING TO SPECIAL DEVELOPMENT OVERLAY DISTRICT
1636	12/16/96	12/24/96	N/A	AN ORD. AMENDING THE LEAWOOD DEVELOPMENT ORDINANCE RELATING TO SPORT COURTS
1637	12/16/96	12/17/96	N/A	AN ORD. AUTHORIZING AND PROVIDING FOR ACQUISITION PRIVATE PROPERTY FOR STORMWATER MANAGEMENT PROJECT SAGAMORE, HIGH DR., (97th/98th Sts.)
1638	12/16/96	12/24/96	N/A	AN ORD. QUITCLAIMING 3 TRACTS OF LAND LOCATED AT MISSION RD. ALONG INDIAN CREEK NEAR THE INTERSECTION OF COLLEGE BLVD. AND TOMAHAWK CREEK PARKWAY - conveying land to Marshall Long
1639	12/16/96	12/17/96	N/A	AN ORD. VACATING A PORTION OF 115TH ST. BETWEEN ROE AVE. AND ROSEWOOD AVE. AND ADJACENT TO LEAWOOD COUNTRY MANOR, 5TH & 8TH PLATS
1640	1/6/97	1/14/97	N/A	AN ORD. ADOPTING AN AMENDMENT TO THE 1993 MASTER DEVELOPMENT PLAN MAP - to change the term "Planned Business District" to "Special Development District"
1641	1/6/97	1/14/97	N/A	AN ORD. AMENDING SECTION 4-3 OF THE "AMENDMENT TO LEAWOOD DEVELOPMENT ORDINANCE" TO ALLOW FOR REVOCATION OF SPECIAL USE PERMITS
1642	1/6/97	1/14/97	N/A	AN ORD. AMENDING SECTION 3-16 OF THE "LEAWOOD DEVELOPMENT ORDINANCE" TO ALLOW FOR A PLANNED RURAL DENSITY SINGLE FAMILY RESIDENTIAL DISTRICT RP-A5 (in place of RP-A10)
1643	1/6/97	1/14/97	N/A	AN ORD. AMENDING SECTION 7-1 OF THE "LEAWOOD DEVELOPMENT ORDINANCE" TO PROVIDE FOR A CONDITIONAL USE PERMIT FEE
1644	1/6/97	1/14/97	N/A	AN ORD. AMENDING SECTION 2-1 OF THE "LEAWOOD DEVELOPMENT ORDINANCE" TO INCLUDE NEW ZONING DISTRICT DESIGNATION OF RP-A5

ORD. NO.	DATE PASSED	DATE PUBLISHED	"CODE OF '84" PAGES DISTR'D	SUBJECT
1623	11/4/96	11/5/96	N/A	AN ORD. AUTHORIZING TEMPORARY NOTES; PROJECT 131; $400,000; NALL AVE., 119TH-135TH ST.
1624	11/4/96	11/5/96	N/A	AN ORD. AUTHORIZING TEMPORARY NOTES; PROJECT 140, 83RD ST.; $1,600,000
1625	11/4/96	11/5/96	N/A	AN ORD. AUTHORIZING TEMPORARY NOTES; PROJECT 144, MISSION RD., 103RD TO I-435; $700,000
1626	11/4/96	11/5/96	N/A	AN ORD. AUTHORIZING TEMPORARY NOTES; PROJECT 146, TOWN CENTER PLAZA; $3,200,000
1627	11/4/96	11/5/96	N/A	AN ORD. AUTHORIZING TEMPORARY NOTES; PROJECT 147, CITY HALL IMPROVEMENTS; $1,500,000
1628	11/4/96	11/5/96	N/A	AN ORD. AUTHORIZING TEMPORARY NOTES; PROJECT 160, MUNICIPAL POOL COMPLEX IMPROVEMENTS; $500,000
1629 C	11/4/96	11/5/96-eff. 12/1/96	X	AN ORD. ADOPTING THE 1996 EDITION OF THE INTERNATIONAL MECHANICAL CODE
1630 C	11/4/96	11/5/96-eff. 12/1/96	X	AN ORD. ADOPTING THE 1996 EDITION OF THE NATIONAL ELECTRICAL CODE
1631	11/18/96	11/26/96	N/A	AN ORD. ACCEPTING A DEED FROM PEMBROKE COURT HOMES ASSOCIATION, CONVERTING PRIVATE STREETS TO PUBLIC STREETS
1632	11/18/96	11/26/96	N/A	AN ORD. REZONING PROPERTY (COLLINA DE VITA), 145TH & MISSION RD. FROM AG TO RP-A10
1633	11/18/96	11/26/96	N/A	AN ORD. AUTHORIZING AND ORDERING THE CONSTRUCTION OF STORMWATER MANAGEMENT PROJECT IN OXFORD HILLS SUBDIVISION
1634 C	12/2/96	12/10/96	X	AN ORD. AMENDING ARTICLE 10 OF CHAPTER 1 (Administration) OF THE CODE OF THE CITY OF LEAWOOD RELATING TO RECORDS MANAGEMENT

ORD. NO.	DATE PASSED	DATE PUBLISHED	"CODE OF '84" PAGES DISTR'D	SUBJECT
1611	9/16/96	9/17/96	N/A	AN ORD. GRANTING A WEATHER STATION EASEMENT TO OVERLAND PARK FOR THE PURPOSES OF CONSTRUCTING, USING, REPLACING AND MAINTAINING A WEATHER INSTRUMENT ON MISSION ROAD OVER NEGRO CREEK
1612 C	10/7/96	10/8/96	X	AN ORD. ADOPTING THE 1996 EDITION OF THE "STANDARD TRAFFIC ORDINANCE"
1613 C	10/7/96	10/8/96	X	AN ORD. AMENDING SECTION 14-201 OF THE CODE OF THE CITY OF LEAWOOD RELATING TO PENALTIES FOR VIOLATIONS OF LOCAL TRAFFIC REGULATIONS
1614 C	10/7/96	10/8/96	X	AN ORD. ADOPTING THE 1996 EDITION OF THE "UNIFORM PUBLIC OFFENSE CODE FOR KANSAS CITIES"
1615 C	10/7/96	10/8/96	X	AN ORD. AMENDING SECTION 11-201 OF THE CODE OF THE CITY OF LEAWOOD RELATING TO PENALTIES FOR LOCAL PUBLIC OFFENSE VIOLATIONS
1616 C	10/7/96	10/8/96	X	AN ORD. AMENDING SECTION 11-606 OF THE CODE OF THE CITY OF LEAWOOD RELATING TO PENALTIES FOR DRUG OFFENSES
1617	10/21/96	10/22/96	N/A	AN ORD. ADOPTING AN AMENDMENT TO THE 1993 MASTER DEVELOPMENT PLAN MAP - approx. 13 acres at approx. 126th & Nall,McKee Property, from Medium Density Residential-Single Family Attached to Open Space-Public
1618	10/21/96	10/22/96	N/A	AN ORD. ACCEPTING DEEDS FROM THE HIGHLANDS OF LEAWOOD SUBDIVISION, CONVERTING PRIVATE STREETS TO PUBLIC STREETS
1619	11/4/96	11/5/96	N/A	AN ORD. AUTHORIZING TEMPORARY NOTES; PROJECT 108, COLLEGE BLVD.; $3,800,000
1620	11/4/96	11/5/96	N/A	AN ORD. AUTHORIZING TEMPORARY NOTES; PROJECT 124, K-150; $2,500,000
1621	11/4/96	11/5/96	N/A	AN ORD. AUTHORIZING TEMPORARY NOTES; PROJECT 126, MISSION RD., 95TH-103RD ST.; $200,000
1622	11/4/96	11/5/96	N/A	AN ORD. AUTHORIZING TEMPORARY NOTES; PROJECT 128, OLD KENNETH RD.; $600,000

ORD. NO.	DATE PASSED	DATE PUBLISHED	"CODE OF '84" PAGES DISTR'D	SUBJECT
1601	8/19/96	8/20/96	N/A	AN ORD. REZONING PROPERTY (TOMAHAWK CREEK OFFICE PARK), SOUTHWEST CORNER OF COLLEGE BLVD. & TOMAHAWK CREEK PARKWAY, FROM AG TO CP-O
1602	8/19/96	8/20/96	N/A	AN ORD. ADOPTING AN AMENDMENT TO THE LEAWOOD 1993 MASTER DEVELOPMENT PLAN MAP - redesignates 4 acres at southwest corner of College & Tomahawk Creek Parkway (Tomahawk Creek Office Park) from Medium Density Residential-Single Family Attached to Office
1603	8/19/96	8/20/96	N/A	AN ORD. AMENDING THE LEAWOOD DEVELOPMENT ORDINANCE TO PROVIDE FOR A NEW ZONING CLASSIFICATION - PLANNED RURAL DENSITY SINGLE FAMILY RESIDENTIAL DISTR.
1604	8/19/96	8/20/96	N/A	AN ORD. AMENDING SECTION 4-1 OF THE LEAWOOD DEVELOPMENT ORDINANCE, PROVIDING FOR CHANGES IN PROVISIONS FOR SATELLITE DISHES
1605	8/19/96	8/20/96 + 8/27/96	N/A	AN ORD. ESTABLISHING THE 1997 ANNUAL LEAWOOD SEWER SYSTEM ASSESSMENT
1606	9/3/96	9/6/96	N/A	AN ORD. AMENDING SECTION PM302.0 OF THE PROPERTY MAINTENANCE CODE PROVIDING FOR CHANGES IN CODE VIOLATION ENFORCEMENT PROCEDURES
1607	9/16/96	9/17/96	N/A	AN ORD. AMENDING SECTION 4-3 OF THE "AMENDMENT OF THE LEAWOOD DEVELOPMENT ORDINANCE", PROVIDING FOR MOVING STRUCTURES AS A SPECIAL USE
1608	9/16/96	9/17/96	N/A	AN ORD. ADOPTING AN AMENDMENT TO THE 1993 MASTER DEVELOPMENT PLAN MAP - 40 acres, southwest corner of College & Tomahawk Creek Parkway, Gordon Tract, from Medium Density Residential-Single Family Attached to Office
1609	9/16/96	9/17/96	N/A	AN ORD. AMENDING AND DEFERRING ASSESSMENTS PREVIOUSLY IMPOSED BY ORDINANCE NO. 1540 TO PAY THE COST OF IMPROVING STATE LINE ROAD, PHASE II - Stultz & Davis
1610	9/16/96	9/17/96	N/A	AN ORD. ACCEPTING 2 TRAFFIC SIGNAL EASEMENTS FROM SAM WILSON'S/KANSAS, INC., FOR TRAFFIC SIGNALS ON 119TH ST BETWEEN ROE AVE. AND NALL AVE.

ORD. NO.	DATE PASSED	DATE PUBLSIHED	"CODE OF '84" PAGES DISTR'D	SUBJECT
1591	6/17/96	6/18/96	N/A	AN ORD. AUTHORIZING ISSUANCE OF TEMPORARY NOTES: PROJECT 144; MISSION RD., 103RD - I-435; $200,000
1592	6/17/96	6/18/96	N/A	AN ORD. AUTHORIZING ISSUANCE OF TEMPORARY NOTES; PROJECT 146; TOWN CENTER PLAZA; $1,000,000
1593	6/17/96	6/18/96	N/A	AN ORD. AUTHORIZING ISSUANCE OF TEMPORARY NOTES; PROJECT 160; MUNICIPAL POOL COMPLEX IMPROVEMENTS; $700,000
1594	6/17/96	6/18/96 eff. 12:01 am 6/20/96	N/A	AN ORD. ANNEXING LAND ON THE SOUTH SIDE OF 151ST ST., RELATIVE TO THE SUBDIVISION RESERVE AT IRONHORSE
1595	7/1/96	7/2/96	N/A	AN ORD. ACCEPTING TRACTS OF LAND FROM OVERLAND PARK BY QUIT-CLAIM DEED IN ACCORDANCE WITH EXCLUSION/ ANNEXATION AGREEMENT WITH OVERLAND PARK DATED 5/20/96
1596	7/1/96	7/2/96	N/A	AN ORD. ACCEPTING A PERMANENT UTILITY EASEMENT FROM BERNARD AND PAULA O'DONNELL FOR THE PURPOSE OF DELIVERING WATER TO THE EAST REST STATION AT IRONHORSE GOLF CLUB
1597 C	7/15/96	8/6/96	X	AN ORD. AMENDING SECTION 1-208 OF THE CODE RELATING TO COMPENSATION FOR MAYOR & COUNCILMEMBERS
1598	8/5/96	8/6/96	N/A	AN ORD. REZONING PROPERTY (STRAWBERRY HILL) AT APPROX. 148TH & MISSION FROM AG TO R-1
1599	8/5/96	8/6/96	N/A	AN ORD. ACCEPTING LAND FROM HALLMARK FARM ASSOCIATES BY QUIT-CLAIM DEED, LAND NORTH OF COLLEGE BLVD. THRU HALLBROOK FARMS TO BE USED AS AN EXTENSION OF EXISTING LEAWOOD PARK AT 106TH & LEE BLVD.
1600	8/5/96	8/6/96	N/A	AN ORD. WHEREBY CITY GRANTS UNTO ITSELF A PERMANENT DRAINAGE EASEMENT IN THE STONE LEDGE SUBDIVISION AT APPROX. 154TH & NALL TO PROVIDE ACCESS TO UNDERGROUND CITY STORM SEWER SYSTEM THROUGH IRONHORSE GOLF CLUB

ORD.NO.	DATE PASSED	DATE PUBLISHED	"CODE OF '84" PAGES DISTR"D	SUBJECT
1579	5/20/96	5/21/96	N/A	AN ORD. DEFERRING & POSTPONING APPS FOR PREL, REVISED AND FINAL PLATS FOR K-150 CORRIDOR
1580	5/20/96	5/21/96	N/A	AN ORD. AUTHORIZING THE IMPROVEMENT OF CITY HALL & ISSUANCE OF GOB $2,100,000.00
158~~2~~1	~~6/04/96~~ 5/20/96	~~6/04/96~~ 5/21/96	N/A	AN ORD. ACCEPTING DEEDS OF RIGHT-OF-WAY FOR MISSION RD IMPROVEMENTS APPROX. 146-148th STREET
158~~3~~2	6/3/96	6/4/96	N/A	~~AN ORD. AMENDING SECTION 14-104 OF THE CODE RELATING TO TRAFFIC REGULATIONS~~-- AN ORD. ACCEPTING DEED FOR GOLF COURSE LAND APPROX. 151ST AND MISSION RD. - from Rose and Monahan; part of the golf course all along, but there was an error in the orig. survey for the acquisition of land for the golf course.
1583 C	6/3/96	6/4/96	X	AN ORD. AMENDING SECTION 14-104 OF THE CODE RELATING TO TRAFFIC REGULATIONS - TO ADD 14-104(d)
1584	6/17/96	6/18/96	N/A	AN ORD. REZONING PROPERTY (RESERVE AT IRONHORSE) AT 151ST & MISSION FROM AG TO RP-1
1585	6/17/96	6/18/96 / eff. 7/19/96	N/A	AN ORD. AUTHORIZING AND PROVIDING FOR THE VACATION OF UTILITY EASEMENTS SHOWN ON PLAT OF WHITEHORSE, 1ST PLAT
1586	6/17/96	6/18/96	N/A	AN ORD. AUTHORIZING ISSUANCE OF TEMPORARY NOTES; PROJECT 124; K-150; $2,900,000
1587	6/17/96	6/18/96	N/A	AN ORD. AUTHORIZING ISSUANCE OF TEMPORARY NOTES; PROJECT 126; MISSION RD., 95TH/103RD; $100,000
1588	6/17/96	6/18/96	N/A	AN ORD. AUTHORIZING ISSUANCE OF TEMPORARY NOTES; PROJECT 131; NALL AVE., 119TH/135TH; $500,000
1589	6/17/96	6/18/96	N/A	AN ORD. AUTHORIZING ISSUANCE OF TEMPORARY NOTES; PROJECT 137; STATE LINE, PHASE IV; $100,000
1590	6/17/96	6/18/96	N/A	AN ORD. AUTHORIZING ISSUANCE OF TEMPORARY NOTES; PROJECT 140; 83RD ST.; $700,000

ORD. NO.	DATE PASSED	DATE PUBLISHED	"CODE OF '84" PAGES DISTR'D	SUBJECT
1569 C	3/25/96	3/26/96	X	AN ORD. RELATING TO THE ASSISTANT CITY ATTORNEY POSITION
1570	4/1/96	4/2/96	N/A	AN ORD. REZONING PROPERTY (HIGHLANDS RANCH) AT 141ST & KENNETH FROM AG TO RP-1
1571 C	4/1/96	4/2/96	X	AN ORD. RELATING TO URINATING OR DEFECATING IN PUBLIC
1572	4/1/96	4/2/96	N/A	AN ORD. ACCEPTING A QUITCLAIM DEED FOR RIGHT-OF-WAY REQUIRED FOR PHASE 1 OF COLLEGE BOULEVARD IMPROVEMENTS (from Hallbrook Farms Associates, L.P.)
1573	4/1/96	4/2/96	N/A	AN ORD. GRANTING 2 PERMANENT DRAINAGE EASEMENTS TO SECURED INVESTMENT ADVISORS DEVELOPMENT, INC., IN THE AREA OF THE VINTAGE APARTMENTS AT APPROX. 121ST & ROE IN OVERLAND PARK; AND REPEALING ORD. NO. 1555 PASSED BY THE COUNCIL DECEMBER 18, 1995.
1574 C	4/15/96	4/19/96	X	AN ORD.RELATING TO REIMBURSEMENT OF EXPENSES, INCLUDING MILEAGE, OF CITY OFFICIALS AND EMPLOYESS
1575	4/15/96	4/19/95	N/A	AN ORD. GRANTING A RIGHT-OF-WAY EASEMENT FOR SANITARY SEWER LINES ACROSS IRONHORSE GOLF COURSE PROPERTY TO JOHNSON COUNTY WASTEWATER DISTRICT
1576	4/15/96	4/23/96	N/A	AN ORD. WHEREBY THE CITY GRANTS A STORM SEWER EASEMENT UNTO ITSELF ACROSS THE IRONHORSE GOLF COURSE PROPERTY FOR THE CONSTRUCTION OF STORM SEWERS AT THE RESERVE AT IRONHORSE SUBDIVISION
1577	4/15/96	4/23/96	N/A	AN ORD. WHEREBY THE CITY GRANTS UNTO ITSELF A PERMANENT DRAINAGE EASEMENT ACROSS THE IRONHORSE GOLF COURSE PROPERTY FOR CONSTRUCTION OF STORM SEWERS FOR THE RESERVE AT IRONHORSE SUBDIVISION
1578 C	5/6/96	5/7/96	X	AN ORD. AMENDING SECTION 11-307 OF THE CODE RELATING TO THE NUISANCE ALARM APPEALS COMMITTEE (formerly the Property Maintenance Code Appeals Board)

ORD. NO.	DATE PASSED	DATE PUBLISHED	"CODE OF '84" PAGES DISTR'D	SUBJECT
1558	2/20/96	2/23/96	N/A	AN ORD. AUTHORIZING ISSUANCE OF $18,860,000 PRINCIPAL AMOUNT OF GENERAL OBLIGATION REFUNDING AND IMPROVEMENT BONDS, SERIES 1996
1559	2/20/96	2/23/96	N/A	AN ORD. AUTHORIZING ISSUANCE OF TEMPORARY NOTES; PROJECT 108; COLLEGE BLVD.; $3,800,000
1560	2/20/96	2/23/96	N/A	AN ORD. AUTHORIZING ISSUANCE OF TEMPORARY NOTES; PROJECT 124; K-150; $2,000,000
1561	2/20/96	2/23/96	N/A	AN ORD. AUTHORIZING ISSUANCE OF TEMPORARY NOTES; PROJECT 126; MISSION RD., 95TH/103RD; $200,000
1562	2/20/96	2/23/96	N/A	AN ORD. AUTHORIZING ISSUANCE OF TEMPORARY NOTES; PROJECT 128; OLD KENNETH RD.; $600,000
1563	2/20/96	2/23/96	N/A	AN ORD. AUTHORIZING ISSUANCE OF TEMPORARY NOTES; PROJECT 131; NALL AVE., 119TH/135TH; $300,000
1564	2/20/96	2/23/96	N/A	AN ORD. AUTHORIZING ISSUANCE OF TEMPORARY NOTES; PROJECT 140; 83RD STREET; $1,600,000
1565	2/20/96	2/23/96	N/A	AN ORD. AUTHORIZING ISSUANCE OF TEMPORARY NOTES; PROJECT 144; MISSION RD., 103RD/I-435; $200,000
1566	2/20/96	2/23/96	N/A	AN ORD. AUTHORIZING ISSUANCE OF TEMPORARY NOTES; PROJECT 146; TOWN CENTER PLAZA; $3,200,000
1567 C	2/20/96	2/23/96	X	AN ORD. RELATING TO CUTTING OF WEEDS AND VEGETATION (Property Maintenance)
1568	3/4/96	3/5/96	N/A	AN ORD. REZONING PROPERTY (FORREST GREENS) AT APPROX. 151ST & MISSION RD. FROM AG TO RP-1 AND CP-1

ORDINANCE NO. 1644

AN ORDINANCE AMENDING SECTION 2-1 OF THE "LEAWOOD DEVELOPMENT ORDINANCE", TO INCLUDE THE NEW ZONING DESIGNATION OF RP-A5 (PLANNED RURAL DENSITY SINGLE FAMILY RESIDENTIAL); AND REPEALING OF EXISTING SECTION.

Be it ordained by the Governing Body of the City of Leawood:

Section 1. "Leawood Development Ordinance" Amended. That Section 2-1 of the "Leawood Development Ordinance", adopted by reference by Ordinance No. 1189C, is hereby amended to read as follows:

2-1 ESTABLISHMENT OF DISTRICTS

In order to carry out the purposes of this ordinance, the following districts are hereby established:

Residential Districts

RP-A Planned Large Lot Single Family Residential

RP-A5 Planned Rural Density Single Family Residential

R-1 Single Family Residential

RP-1 Planned Single Family Residential

RP-2 Planned Two Family Residential

RP-3 Planned Apartment House Residential

RP-4 Planned Cluster Residential

Commercial Districts

CP-O Planned Office

CP-1 Planned Neighborhood Retail

CP-2 Planned General Retail

Industrial Districts

BP Planned Business Park

PI Planned Industrial

Special Purpose Districts

SD Special Development

AG Agricultural

REC Planned Recreation

FL Flood Hazard Overlay

Section 2. Repeal of Existing Section. That existing Section 2-1 of the "Leawood Development Ordinance" is hereby repealed.

Section 3. Take Effect. That this ordinance shall take effect and be in force from and after its publication in the official City newspaper.

Passed by the Council the 06th day of January, 1997.

Approved by the Mayor the 06th day of January, 1997.

(S.E.A.)

Marcia Rinehart, Mayor

Attest:

Martha Heizer, City Clerk

APPROVED FOR FORM:

R.S. Wetzler, City Attorney

ORD1644

Publication Fees: $28.54

The Legal Record
600 E. Santa Fe, Suite 4
Olathe, KS 66061-3700

CITY OF LEAWOOD
ATTN: MARTHA HEIZER
4800 TOWN CENTER DR
LEAWOOD, KS 66211

Proof of Publication

STATE OF KANSAS, JOHNSON COUNTY, SS;
Tammy Schwien, of lawful age, being first duly sworn, deposes and says that she is Legal Notices Administrator of The Legal Record which is a newspaper printed in the State of Kansas, published in and of general paid circulation on a weekly, monthly or yearly basis in Johnson County, Kansas, is not a trade, religious or fraternal publication, is published at least weekly fifty (50) times a year, has been so published continuously and uninterrupted in said County and State for a period of more than five (5) years prior to the first publication of the notice attached, and has been admitted at the post office as second class matter (now called periodicals class).
That a notice was published in all editions of the regular and entire issue for the following subject matter (also identified by the following case number, if any) for 1 consecutive week(s), as follows:

ORDINANCE NO. 1644--1/14/97

Tammy Schwien
Legal Notices Administrator

Subscribed and sworn to before me on this date:
January 15, 1997

Debra Dziadura
Notary Public

DEBRA DZIADURA
Notary Public - State of Kansas

My appointment expires: August 21, 1999.

$28.54

ORDINANCE NO. 1644

First published in The Legal Record, Tuesday, January 14, 1997.

ORDINANCE NO. 1644

AN ORDINANCE AMENDING SECTION 2-1 OF THE "LEAWOOD DEVELOPMENT ORDINANCE", TO INCLUDE THE NEW ZONING DESIGNATION OF RP-A5 (PLANNED RURAL DENSITY SINGLE FAMILY RESIDENTIAL); AND REPEALING OF EXISTING SECTION.

Be it ordained by the Governing Body of the City of Leawood:

Section 1. "Leawood Development Ordinance" Amended. That Section 2-1 of the "Leawood Development Ordinance", adopted by reference by Ordinance No. 1189C, is hereby amended to read as follows:

2-1 ESTABLISHMENT OF DISTRICTS

In order to carry out the purposes of this ordinance, the following districts are hereby established:

Residential Districts

RP-A Planned Large Lot Single Family Residential

RP-A5 Planned Rural Density Single Family Residential

R-1 Single Family Residential

RP-1 Planned Single Family Residential

RP-2 Planned Two Family Residential

RP-3 Planned Apartment House Residential

RP-4 Planned Cluster Residential

Commercial Districts

CP-O Planned Office

CP-1 Planned Neighborhood Retail

CP-2 Planned General Retail

Industrial Districts

BP Planned Business Park

PI Planned Industrial

Special Purpose Districts

SD Special Development

AG Agricultural

REC Planned Recreation

FL Flood Hazard Overlay

Section 2. Repeal of Existing Section. That existing Section 2-1 of the "Leawood Development Ordinance" is hereby repealed.

Section 3. Take Effect. That this ordinance shall take effect and be in force from and after its publication in the official City newspaper.

Passed by the Council the 06th day of January, 1997.

Approved by the Mayor the 06th day of January, 1997.

(S E A L)

Marcia Rinehart

Marcia Rinehart, Mayor

Attest:

Martha Heizer

Martha Heizer, City Clerk

APPROVED FOR FORM: /s/ R.S. Wetzler

R.S. Wetzler, City Attorney

ORDINANCE NO. 1643

AN ORDINANCE AMENDING SECTION 7-1 OF THE "LEAWOOD DEVELOPMENT ORDINANCE", TO PROVIDE FOR A CONDITIONAL USE PERMIT FEE; AND REPEALING OF EXISTING SECTION.

Be it ordained by the Governing Body of the City of Leawood:

Section 1. "Leawood Development Ordinance" Amended. That Section 7-1 of the "Leawood Development Ordinance", adopted by reference by Ordinance No. 1189C, is hereby amended to read as follows:

7-1 FEE REQUIRED

Any application for the following shall be accompanied by the requisite fee:

1) Variance/Exception;

2) Appeals to the Board of Zoning Appeals;

3) Special use permit, including temporary uses;

4) Zoning reclassifications of property;

5) Planned District proposals;

6) Sign permit;

7) Oil well application;

8) Conditional Use.

Section 2. Repeal of Existing Section. That existing Section 7-1 of the "Leawood Development Ordinance" is hereby repealed.

Section 3. Take Effect. That this ordinance shall take effect and be in force from and after its publication in the official City newspaper.

Passed by the Council the 06th day of January, 1997.

Approved by the Mayor the 06th day of January, 1997.

(SEAL)

Marcia Rinehart

Marcia Rinehart, Mayor

Attest:

Martha Heizer

Martha Heizer, City Clerk

APPROVED FOR FORM:

R.S. Wetzler, City Attorney

ORD1643

Publication Fees: $19.09

The Legal Record
600 E. Santa Fe, Suite 4
Olathe, KS 66061-3700

CITY OF LEAWOOD
ATTN: MARTHA HEIZER
4800 TOWN CENTER DR
LEAWOOD, KS 66211

Proof of Publication

STATE OF KANSAS, JOHNSON COUNTY, SS;
Tammy Schwien, of lawful age, being first duly sworn, deposes and says that she is Legal Notices Administrator of The Legal Record which is a newspaper printed in the State of Kansas, published in and of general paid circulation on a weekly, monthly or yearly basis in Johnson County, Kansas, is not a trade, religious or fraternal publication, is published at least weekly fifty (50) times a year, has been so published continuously and uninterrupted in said County and State for a period of more than five (5) years prior to the first publication of the notice attached, and has been admitted at the post office as second class matter (now called periodicals class).
That a notice was published in all editions of the regular and entire issue for the following subject matter (also identified by the following case number, if any) for 1 consecutive week(s), as follows:

ORDINANCE NO. 1643--1/14/97

Tammy Schwien
Legal Notices Administrator

Subscribed and sworn to before me on this date:
January 15, 1997

Debra Dziadura
Notary Public

DEBRA DZIADURA
Notary Public - State of Kansas

My appointment expires: August 21, 1999.

ORDINANCE NO. 1643

First published in The Legal Record, Tuesday, January 14, 1997.

ORDINANCE NO. 1643

AN ORDINANCE AMENDING SECTION 7-1 OF THE "LEAWOOD DEVELOPMENT ORDINANCE", TO PROVIDE FOR A CONDITIONAL USE PERMIT FEE; AND REPEALING OF EXISTING SECTION.

Be it ordained by the Governing Body of the City of Leawood:

Section 1. "Leawood Development Ordinance" Amended. That Section 7-1 of the "Leawood Development Ordinance", adopted by reference by Ordinance No. 1189C, is hereby amended to read as follows:

7-1 FEE REQUIRED

Any application for the following shall be accompanied by the requisite fee:

1) Variance/Exception;
2) Appeals to the Board of Zoning Appeals;
3) Special use permit, including temporary uses;
4) Zoning reclassifications of property;
5) Planned District proposals;
6) Sign permit;
7) Oil well application;
8) Conditional Use.

Section 2. Repeal of Existing Section. That existing Section 7-1 of the "Leawood Development Ordinance" is hereby repealed.

Section 3. Take Effect. That this ordinance shall take effect and be in force from and after its publication in the official City newspaper.

Passed by the Council the 06th day of January, 1997.

Approved by the Mayor the 06th day of January, 1997.

(SEAL)

Marcia Rinehart
Marcia Rinehart, Mayor

Attest:

Martha Heizer
Martha Heizer, City Clerk

APPROVED FOR FORM: /s/ R.S. Wetzler
R.S. Wetzler, City Attorney

$19.09

ORDINANCE NO. 1642

AN ORDINANCE AMENDING SECTION 3-16 OF THE "LEAWOOD DEVELOPMENT ORDINANCE", TO ALLOW FOR A PLANNED RURAL DENSITY SINGLE FAMILY RESIDENTIAL DISTRICT; AND REPEALING EXISTING SECTION.

Be it ordained by the Governing Body of the City of Leawood:

Section 1. "Leawood Development Ordinance" Amended. That Section 3-16 of the "Leawood Development Ordinance" is hereby amended to read as follows:

3-16 RP-A5 (PLANNED RURAL DENSITY SINGLE FAMILY RESIDENTIAL DISTRICT)

A) General Purpose and Description: Property zoned and developed as RP-A5 Planned Rural Density Single Family Residential shall be to provide for single family detached dwellings and other selected uses which are compatible with low density residential character of this district. Property zoned RP-A5 should be those tracts that correspond to the rural density residential land use category identified in the Master Development Plan.

B) Principal Permitted Uses: In District RP-A5 no building, structure, land or premises shall be used, and no building or structure shall be hereafter erected, constructed, reconstructed, moved, or altered, except for one or more of the following uses:

1) Single Family Residential Dwellings (detached).

2) Group Homes as defined herein.

3) Railroads and public or quasi-public utilities including substations.

4) Noncommercial nurseries and gardens.

5) Oil and gas wells.

C) Accessory Uses: (See Section 4-1 of this ordinance.)

D) Special Uses: (See Section 4-3 of this ordinance.)

E) Temporary Uses: The following use shall be permitted as a temporary use in the RP-A5 District in accordance with Section 2-4.4 of this ordinance.

1) Building or trailer for storage of materials and/or equipment necessary for construction authorized by a valid building permit, provided the location of the building or trailer has been approved by the Director of Planning and Development.

F) Bulk Regulations:

1) Front Setback: 150 feet

2) Side Setback: 35 feet

3) Rear Setback: 100 feet

4) Lot Area: 5 acres per dwelling (gross)

5) Lot Frontage: 150 feet

6) Height Limit: 2 1/2 stories

G) Parking Requirements: Refer to individual parking group in Section 4-4 of this ordinance. No single family residence shall be constructed that does not provide space for fully covered and fully enclosed parking for 2 standard passenger vehicles in an area designated as a garage, attached or integral to the residence and compatible with said residence in construction, materials and color; nor shall any existing single family residence be altered in such away as to incorporate existing garage space into living area unless said alteration shall provide an equivalent area of fully covered, fully enclosed parking in the form of a garage attached to or integral with said residence and compatible in construction, materials and color.

H) Signs: (See Section 4-5 of this ordinance.)

I) Landscaping and Screening Requirements: Single family dwellings shall maintain a minimum of 25% of lot area (exclusive of right-of-way) as a permeable and uncovered surface that contains living material. All land areas which are to remain unpaved and not covered by buildings shall be brought to finish grade and sodded except those areas receiving other landscaping materials. (For additional requirements see Section 4-6 of this ordinance.)

J) Sewage Disposal: Connection to a sanitary sewer system with treatment plant or an acceptable septic tank system approved by Johnson county is required for development in the district.

K) Type of Construction: Exterior walls of all dwellings shall be of brick, stone, wood, stucco, wood shingles, wood shakes, wood siding, wood paneling, wood fiber product paneling, tile or any combination thereof. Windows, doors and louvers shall be of wood or metal and glass.

1) Roofs shall be covered with:

a) Wood Shingles: Number 1 or 2 grade

b) Wood Shakes:

1) Number 1 or 2 grade

2) Minimum 1/2 inch thickness measured at butt

c) Slate

d) Clay Tile

e) Concrete Tile

f) Other Tile

1) Synthetic slate within similar color range of slate, clay or concrete tile.

2) Other tile or roofing materials as specifically authorized by resolution of the Plan Commission and ordinance of the City Council provided that all building code requirements are met.

g) Laminated Composition Shingles:

1) Architectural shingle with shadow lines and or relief imitating a wood shingle or wood shake.

2) Required to be installed with sheet metal valleys and flashings.

3) Required to be installed with pre-formed ridge shingles.

4) Have the appearance and color range of natural weathered cedar shingles or weathered cedar shakes.

5) Must use a minimum of five (5) color blend granules.

6) Required to be placed on solid decking. All existing roofing materials shall be removed down to the stringers and/or 1/4's.

7) Minimum thickness 3/16 inch measured at exposed butt-end of overlap creating the shadow line or individual thickness of the ply of roof material.

8) Required to be U.L. Class A fire rated material.

9) Required to be a minimum of 330 lb./square.

2. Flat roofs or roofs with a pitch of less than 3 inches per foot, in addition to the materials permitted herein, for other roofs, may also be covered with metal, built-up asphalt, or single ply elastomeric membrane.

L) Type of Construction - Residential Design Manufactured Homes: Exterior walls of all residential design manufactured homes shall be of brick, stone, wood, stucco, wood shingles, wood shakes, wood siding, wood paneling, wood fiber product paneling, tile or any combination thereof. Windows, doors and louvers shall be of wood or metal or glass.

1) All residential design manufactured homes shall have a minimum of 1200 square feet of main floor area, excluding any attached garage or porch, and the longest exterior dimension of the body shall be not more than 2 1/2 times the shortest exterior dimension.

2) The exterior siding must be of brick, stone, wood, stucco, wood shingles, wood shakes, wood siding, wood paneling, wood fiber product paneling, tile or any combination thereof. Non-masonry siding material shall extend below the top of the exterior foundation or curtain wall and the joint shall be flashed in accordance with the city building codes.

3) All residential design manufactured homes shall be installed in accordance with the recommended installation procedures of the manufacturer and city building

codes. The running gear, tongue, axles, and wheels shall be removed from the unit at the time of installation A continuous, permanent masonry or concrete foundation, unpierced except for required ventilation and access, shall be installed under the perimeter of the home.

4) The home shall have an attached two car garage.

5) Roofing shall be the same as for single family dwellings as stated in subsection K.

Section 2. Repeal of Existing Section. That existing Section 3-16 of the "Leawood Development Ordinance" is hereby repealed. (Prior law: Ordinance No. 1603)

Section 3. Take Effect. That this ordinance shall take effect and be in force from and after its publication in the official City newspaper.

Passed by the Council the 06th day of January, 1997.

Approved by the Mayor the 06th day of January, 1997.

(S.E.A.L.)

Marcia Rinehart

Marcia Rinehart, Mayor

Attest:

Martha Heizer

Martha Heizer, City Clerk

APPROVED FOR FORM:

R.S. Wetzler, City Attorney

ORD1642

Publication Fees: $78.17

The Legal Record
600 E. Santa Fe, Suite 4
Olathe, KS 66061-3700

CITY OF LEAWOOD
ATTN: MARTHA HEIZER
4800 TOWN CENTER DR
LEAWOOD, KS 66211

Proof of Publication

STATE OF KANSAS, JOHNSON COUNTY, SS;
Tammy Schwien, of lawful age, being first duly sworn, deposes and says that she is Legal Notices Administrator of The Legal Record which is a newspaper printed in the State of Kansas, published in and of general paid circulation on a weekly, monthly or yearly basis in Johnson County, Kansas, is not a trade, religious or fraternal publication, is published at least weekly fifty (50) times a year, has been so published continuously and uninterrupted in said County and State for a period of more than five (5) years prior to the first publication of the notice attached, and has been admitted at the post office as second class matter (now called periodicals class).
That a notice was published in all editions of the regular and entire issue for the following subject matter (also identified by the following case number, if any) for 1 consecutive week(s), as follows:

ORDINANCE NO. 1642--1/14/97

Tammy Schwien
Legal Notices Administrator

Subscribed and sworn to before me on this date:
January 15, 1997

Debra Dziadura
Notary Public

DEBRA DZIADURA
Notary Public - State of Kansas

My appointment expires: August 21, 1999.

$78.17

ORDINANCE NO. 1642

First published in The Legal Record, Tuesday, January 14, 1997.

ORDINANCE NO. 1642

AN ORDINANCE AMENDING SECTION 3-16 OF THE "LEAWOOD DEVELOPMENT ORDINANCE", TO ALLOW FOR A PLANNED RURAL DENSITY SINGLE FAMILY RESIDENTIAL DISTRICT; AND REPEALING EXISTING SECTION.

Be it ordained by the Governing Body of the City of Leawood:

Section 1. "Leawood Development Ordinance" Amended. That Section 3-16 of the "Leawood Development Ordinance" is hereby amended to read as follows:

3-16 RP-A5 (PLANNED RURAL DENSITY SINGLE FAMILY RESIDENTIAL DISTRICT)

A) General Purpose and Description: Property zoned and developed as RP-A5 Planned Rural Density Single Family Residential shall be to provide for single family detached dwellings and other selected uses which are compatible with low density residential character of this district. Property zoned RP-A5 should be those tracts that correspond to the rural density residential land use category identified in the Master Development Plan.

B) Principal Permitted Uses: In District RP-A5 no building, structure, land or premises shall be used, and no building or structure shall be hereafter erected, constructed, reconstructed, moved, or altered, except for one or more of the following uses:

1) Single Family Residential Dwellings (detached).

2) Group Homes as defined herein.

3) Railroads and public or quasi-public utilities including substations.

4) Noncommercial nurseries and gardens.

5) Oil and gas wells.

C) Accessory Uses: (See Section 4-1 of this ordinance.)

D) Special Uses: (See Section 4-3 of this ordinance.)

E) Temporary Uses: The following use shall be permitted as a temporary use in the RP-A5 District in accordance with Section 2-4.4 of this ordinance.

1) Building or trailer for storage of materials and/or equipment necessary for construction authorized by a valid building permit, provided the location of the building or trailer has been approved by the Director of Planning and Development.

F) Bulk Regulations:

1) Front Setback: 150 feet

2) Side Setback: 35 feet

3) Rear Setback: 100 feet

4) Lot Area: 5 acres per dwelling (gross)

5) Lot Frontage: 150 feet

6) Height Limit: 2 1/2 stories

G) Parking Requirements: Refer to individual parking group in Section 4-4 of this ordinance. No single family residence shall be constructed that does not provide space for fully covered and fully enclosed parking for 2 standard passenger vehicles in an area designated as a garage, attached or integral to the residence and compatible with said residence in construction, materials and color; nor shall any existing single family residence be altered in such away as to incorporate existing garage space into living area unless said alteration shall provide an equivalent area of fully covered, fully enclosed parking in the form of a garage attached to or integral with said residence and compatible in construction, materials and color.

H) Signs: (See Section 4-5 of this ordinance.)

I) Landscaping and Screening Requirements: Single family dwellings shall maintain a minimum of 25% of lot area (exclusive of right-of-way) as a permeable and uncovered surface that contains living material. All land areas which are to remain unpaved and not covered by buildings shall be brought to finish grade and sodded except those areas receiving other landscaping materials. (For additional requirements see Section 4-6 of this ordinance.)

J) Sewage Disposal: Connection to a sanitary sewer system with treatment plant or an acceptable septic tank system approved by Johnson county is required for development in the district.

K) Type of Construction: Exterior walls of all dwellings shall be of brick, stone, wood, stucco, wood shingles, wood shakes, wood siding, wood paneling, wood fiber product paneling, tile or any combination thereof. Windows, doors and louvers shall be of wood or metal and glass.

1) Roofs shall be covered with:

a) Wood Shingles: Number 1 or 2 grade

b) Wood Shakes:

1) Number 1 or 2 grade

2) Minimum 1/2 inch thickness measured at butt

c) Slate

d) Clay Tile

e) Concrete Tile

f) Other Tile

1) Synthetic slate within similar color range of slate, clay or concrete tile.

2) Other tile or roofing materials as specifically authorized by resolution of the Plan Commission and ordinance of the City Council provided that all building code requirements are met.

g) Laminated Composition Shingles:

1) Architectural shingle with shadow lines and or relief imitating a wood shingle or wood shake.

2) Required to be installed with sheet metal valleys and flashings.

3) Required to be installed with pre-formed ridge shingles.

4) Have the appearance and color range of natural weathered cedar shingles or weathered cedar shakes.

5) Must use a minimum of five (5) color blend granules.

6) Required to be placed on solid decking. All existing roofing materials shall be removed down to the stringers and/or 1/4's.

7) Minimum thickness 3/16 inch measured at exposed butt-end of overlap creating the shadow line or individual thickness of the ply of roof material.

8) Required to be U.L. Class A fire rated material.

9) Required to be a minimum of 330 lb./square.

2. Flat roofs or roofs with a pitch of less than 3 inches per foot, in addition to the materials permitted herein, for other roofs, may also be covered with metal, built-up asphalt, or single ply elastomeric membrane.

L) Type of Construction - Residential Design Manufactured Homes: Exterior walls of all residential design manufactured homes shall be of brick, stone, wood, stucco, wood shingles, wood shakes, wood siding, wood paneling, wood fiber product paneling, tile or any combination thereof. Windows, doors and louvers shall be of wood or metal or glass.

1) All residential design manufactured homes shall have a minimum of 1200 square feet of main floor area, excluding any attached garage or porch, and the longest exterior dimension of the body shall be not more than 2 1/2 times the shortest exterior dimension.

2) The exterior siding must be of brick, stone, wood, stucco, wood shingles, wood shakes, wood siding, wood paneling, wood fiber product paneling, tile or any combination thereof. Non-masonry siding material shall extend below the top of the exterior foundation or curtain wall and the joint shall be flashed in accordance with the city building codes.

3) All residential design manufactured homes shall be installed in accordance with the recommended installation procedures of the manufacturer and city building

CONTINUED ON PAGE 20

CONTINUED FROM PAGE 19

codes. The running gear, tongue, axles, and wheels shall be removed from the unit at the time of installation A continuous, permanent masonry or concrete foundation, unpierced except for required ventilation and access, shall be installed under the perimeter of the home.

4) The home shall have an attached two car garage.

5) Roofing shall be the same as for single family dwellings as stated in subsection K.

Section 2. Repeal of Existing Section. That existing Section 3-16 of the "Leawood Development Ordinance" is hereby repealed (Prior law: Ordinance No. 1603)

Section 3. Take Effect. That this ordinance shall take effect and be in force from and after its publication in the official City newspaper.

Passed by the Council the 06th day of January, 1997.

Approved by the Mayor the 06th day of January, 1997.

(S E A L)

Marcia Rinehart, Mayor

Attest:

Martha Heizer, City Clerk

APPROVED FOR FORM: /s/ R.S. Wetzler

R.S. Wetzler, City Attorney

ORDINANCE NO. 1641

AN ORDINANCE AMENDING SECTION 4-3 OF THE "AMENDMENT TO LEAWOOD DEVELOPMENT ORDINANCE", TO ALLOW FOR REVOCATION OF SPECIAL USE PERMITS; AND REPEALING EXISTING SECTION.

Be it ordained by the Governing Body of the City of Leawood:

Section 1. "Amendment to Leawood Development Ordinance" Amended. That Section 4-3 of the "Amendment to Leawood Development Ordinance" is hereby amended to read as follows:

4-3 SPECIAL USE PROVISIONS

4-3.1 Special Uses Designated

Any of the following uses may be located in any district by Special Use Permit of the Governing Body after notification of adjacent and abutting property owners, public hearing, and after recommendation of the Plan Commission, under such conditions as to operation, site development, signs, and time limit as may be deemed necessary in order that such use will not seriously injure the appropriate use of the neighboring property, and will conform to the general intent and purpose of this Ordinance and shall comply with the height and area regulations of the district in which they may be located unless a variance is specifically granted by the Board of Zoning Appeals.

1) Amusement parks, privately-owned baseball or athletic fields, race tracks;

2) Aviation fields or airports, under such restrictions as may be imposed to control noise, promote safety, and prevent undue danger to aircraft or to surrounding property;

3) Cemeteries, mausoleums, or crematories for the disposal of the dead;

4) Public and private schools;

5) Churches, synagogues and other places of worship;

6) Clubs, including those where alcoholic beverages are consumed;

7) Drive-in theaters;

8) Golf driving ranges, commercial or illuminated;

9) Gun clubs, skeet shoots, or target ranges;

10) Hospitals; special care facilities for humans; not in include group homes as defined herein.

11) Campgrounds, picnic groves and fishing lakes, including minor and incidental concession facilities for patrons only;

12) Nursery sales office, building greenhouse, or area (wholesale or retail);

13) Nursing and convalescent homes; housing for the elderly; retirement centers and communities; not to include group homes as defined herein.

14) Outdoor poster panels or billboards; off-site promotional signs;

15) Veterinary clinics, dog kennels;

16) Radio, television and microwave towers;

17) Television and amateur radio antennae exceeding district height limitations.

18) Reservoirs, towers, filter beds, or water treatment plants;

19) Riding stables and tracks;

20) Wastewater treatment plant;

21) Motor hotels, motels, hotels, and convention centers;

22) Buildings, structures, and premises for public utility services, or public service corporations;

23) Temporary use of land or building for commercial or industrial purposes, provided that any building or structure constructed thereon which is not otherwise permitted in the District in which such land is situated shall be temporary, and any stored equipment or material shall be removed upon the date of expiration of the special use permit, which permit shall be valid for not more than 2 years but may be renewed after public hearing;

24) Assembly halls, community centers, philanthropic organizations;

25) Child care centers, family day care homes, preschools, nursery schools, Montessori schools, private kindergartens, day care homes and group day care homes; not to include group homes as defined herein.

26) Off-street parking lots or off-street parking structures of a temporary or permanent nature;

27) Group boarding home for minors or adults; not to include group homes as defined herein.

28) Private ambulance service;

29) Bed and breakfast;

30) Horse pasturing on lots of less than 3 acres in residential districts.

31) Temporary self contained health care suites located within an attached garage are intended to provide an "in home" physical care facility as a temporary alternative to a nursing home environment. It is not intended to provide long term care lodging for anyone that would be better served by a more permanent solution. Such permanent alternate solutions may require an alteration to the home, an addition onto the home, or off-site care by a health care institution. Such use is allowed as a special use provided the following conditions are met:

   a) The suites are to be freestanding self contained units including independent heating and air conditioning units and plumbing systems.

   b) Not more than 2 persons shall be housed in such suite provided said housing is necessitated by a physical impairment or health care need of one or both persons and said health care need is being met by occupant or occupants of the existing home. Said person(s) residing in such health care suite shall be either an occupant or a relative of the occupant of the home except in cases when an overnight health care provider is required.

   c) A letter from a licensed doctor of medicine or osteopathy shall be submitted, along with the application for special use, verifying the need for such health care suite by the applicant or prospective resident of said suite.

   d) Health care suites shall be limited to a maximum of 2 years duration. Such use may only be continued for 1 additional year and only after

review and approval by the Plan Commission and City Council. Any amount of time beyond 3 years will require a permanent solution to be specified at the time the additional year is requested. Such solution shall be made a condition of approval if granted. At the end of the special use, the unit shall be removed and the garage restored to its former condition.

e) Any exterior modification of the home necessitated by the suite, such as the temporary removal of the garage door(s) to facilitate a private entry, windows, or heating or cooling units, shall be replaced with materials of an architectural likeness to the existing home. Samples of materials proposed to be used shall be submitted with the application for approval by the Plan Commission.

f) Additional written notification shall be required to the applicant's homes association and to all property owners within 200 feet of the applicant's property.

g) Because the installation of such health care suite temporarily removes the enclosed off-street parking spaces required by ordinance, the applicant shall submit an interim plan for dealing with off-street parking for the duration of the special use.

32) The Director of Planning may upon application by the proponent issue an Administrative Special Use Permit for the use of a specified parcel of land for such temporary short-term uses as trade shows, street fairs, expositions, promotional ventures, entertainment, seasonal sales, balloons, search lights, and tents, provided the following conditions are met:

a) The applicant shall submit in written form a complete description of the proposed use, including estimated accumulation of automobiles and persons, hours of operation, and other characteristics and effects on the neighborhood.

b) The applicant shall submit a site plan showing the location of any proposed structure.

c) The short-term special use shall not be operated longer than 10 consecutive days.

d) No more than 3 special event permits per calendar year shall be issued administratively at any location. Any additional permits may be granted by the Governing Body.

e) Upon the cessation of the short-term special use, all materials and equipment shall be promptly removed and the property restored to its normal condition.

f) Any structure used in conjunction with the special event shall be the subject of a valid building permit or tent permit.

g) The special event shall not cause undue traffic congestion or accident potential given anticipated attendance and the design of adjacent streets, intersections, and traffic controls.

h) The activity shall not cause the overcrowding of parking facilities given anticipated attendance and the possible reduction in the number of available spaces used by the event itself.

i) The special event shall not impair the usefulness, enjoyment or value of adjacent property due to the generation of excessive noise, smoke, odor, glare, litter or visual pollution.

j) If, after giving full consideration to the effect of the requested special use on the neighborhood and the community, the Director of Planning deems the special use reasonable, the special use permit for the short-term use may be approved. Conditions of operation, provision for surety bond, and other reasonable safeguards may be written into the special use permit. Such permit may be approved in any zoning district.

k) Any applicant denied an Administrative Special Use Permit shall be notified in writing of the reasons for the denial and of the opportunity to appeal the denial to the Governing Body.

4-3.2 Revocation of special use permits

1) Basis for Revocation

Any special use permit granted under the authority of this chapter is subject to revocation for any or all of the following reasons:

a) Non-compliance with any applicable requirement set forth in Section 4-3.1.

b) Non-compliance with any special conditions imposed at the time of approval of the special use permit.

c) Violation of any provisions of the Code pertaining to the use of the land, construction or uses of buildings or structures or activities conducted on the premises by the applicant or agents of the applicant.

d) Violation of any other applicable Code provisions or any state or federal law or regulation by the applicant or agents of the applicant, provided that such violations relate to the conduct or activity authorized by the special use permit or the qualifications of the applicant or its agents to engage in such conduct or activity.

2) Procedure for revocation

a) Revocation proceedings may be initiated by a majority vote of the Governing Body.

b) Unless the applicant and landowner agree in writing that the permit may be revoked, the Governing Body shall hold a public hearing to consider the revocation of the special use permit.

c) The City shall give the applicant and landowner certified mail notice, return receipt requested, of the scheduled revocation hearing at least five days prior to the date scheduled for such hearing. Notice must be published in the official newspaper a minimum of 5 days but not greater than 20 days prior to the hearing.

d) No special use permit shall be revoked unless a majority of the governing Body is satisfied by a preponderance of the evidence that grounds for revocation exist. Any motion of the revocation must clearly state the grounds

for revocation. Adoption of any motion to revoke a special use permit may be made subject to subsequent adoption of written findings of fact and conclusions of law, at the discretion of the Governing Body.

e) An appeal of any decision of the Governing Body to revoke a special use permit may be filed in the District Court of Johnson County, Kansas. Any appeal taken shall not suspend the order of revocation during the pending appeal unless so ordered by the District Court.

Section 2. Repeal of Existing Section. That existing Section 4-3 of the "Amendment to Leawood Development Ordinance" is hereby repealed. (Prior law: Ordinance No. 1636)

Section 3. Take Effect. That this ordinance shall take effect and be in force from and after its publication in the official City newspaper.

Passed by the Council the 06th day of January, 1997.

Approved by the Mayor the 6th day of January, 1997.

(SEAL)

Marcia Rinehart, Mayor

Attest:

Martha Heizer, City Clerk

APPROVED FOR FORM:

R.S. Wetzler, City Attorney

ORD1641

Publication Fees: $112.53

The Legal Record
600 E. Santa Fe, Suite 4
Olathe, KS 66061-3700

CITY OF LEAWOOD
ATTN: MARTHA HEIZER
4800 TOWN CENTER DR
LEAWOOD, KS 66211

Proof of Publication

STATE OF KANSAS, JOHNSON COUNTY, SS;
Tammy Schwien, of lawful age, being first duly sworn, deposes and says that she is Legal Notices Administrator of The Legal Record which is a newspaper printed in the State of Kansas, published in and of general paid circulation on a weekly, monthly or yearly basis in Johnson County, Kansas, is not a trade, religious or fraternal publication, is published at least weekly fifty (50) times a year, has been so published continuously and uninterrupted in said County and State for a period of more than five (5) years prior to the first publication of the notice attached, and has been admitted at the post office as second class matter (now called periodicals class).
That a notice was published in all editions of the regular and entire issue for the following subject matter (also identified by the following case number, if any) for 1 consecutive week(s), as follows:

ORDINANCE NO. 1641--1/14/97

Tammy Schwien
Legal Notices Administrator

Subscribed and sworn to before me on this date:
January 15, 1997

Debra Dziadura
Notary Public

DEBRA DZIADURA
Notary Public - State of Kansas

My appointment expires: August 21, 1999.

$112.53

ORDINANCE NO. 1641

First published in The Legal Record, Tuesday, January 14, 1997.

ORDINANCE NO. 1641

AN ORDINANCE AMENDING SECTION 4-3 OF THE "AMENDMENT TO LEAWOOD DEVELOPMENT ORDINANCE", TO ALLOW FOR REVOCATION OF SPECIAL USE PERMITS; AND REPEALING EXISTING SECTION.

Be it ordained by the Governing Body of the City of Leawood:

Section 1 "Amendment to Leawood Development Ordinance" Amended. That Section 4-3 of the "Amendment to Leawood Development Ordinance" is hereby amended to read as follows:

4-3 SPECIAL USE PROVISIONS

4-3.1 Special Uses Designated

Any of the following uses may be located in any district by Special Use Permit of the Governing Body after notification of adjacent and abutting property owners, public hearing, and after recommendation of the Plan Commission, under such conditions as to operation, site development, signs, and time limit as may be deemed necessary in order that such use will not seriously injure the appropriate use of the neighboring property, and will conform to the general intent and purpose of this Ordinance and shall comply with the height and area regulations of the district in which they may be located unless a variance is specifically granted by the Board of Zoning Appeals.

1) Amusement parks, privately-owned baseball or athletic fields, race tracks;

2) Aviation fields or airports, under such restrictions as may be imposed to control noise, promote safety, and prevent undue danger to aircraft or to surrounding property;

3) Cemeteries, mausoleums, or crematories for the disposal of the dead;

4) Public and private schools;

5) Churches, synagogues and other places of worship;

6) Clubs, including those where alcoholic beverages are consumed;

7) Drive-in theaters;

8) Golf driving ranges, commercial or illuminated;

9) Gun clubs, skeet shoots, or target ranges;

10) Hospitals; special care facilities for humans; not in include group homes as defined herein.

11) Campgrounds, picnic groves and fishing lakes, including minor and incidental concession facilities for patrons only;

12) Nursery sales office, building greenhouse, or area (wholesale or retail);

13) Nursing and convalescent homes; housing for the elderly; retirement centers and communities; not to include group homes as defined herein.

14) Outdoor poster panels or billboards; off-site promotional signs;

15) Veterinary clinics, dog kennels;

16) Radio, television and microwave towers;

17) Television and amateur radio antennae exceeding district height limitations.

18) Reservoirs, towers, filter beds, or water treatment plants;

19) Riding stables and tracks;

20) Wastewater treatment plant;

21) Motor hotels, motels, hotels, and convention centers;

22) Buildings, structures, and premises for public utility services, or public service corporations;

23) Temporary use of land or building for commercial or industrial purposes, provided that any building or structure constructed thereon which is not otherwise permitted in the District in which such land is situated shall be temporary, and any stored equipment or material shall be removed upon the date of expiration of the special use permit, which permit shall be valid for not more than 2 years but may be renewed after public hearing;

24) Assembly halls, community centers, philanthropic organizations;

25) Child care centers, family day care homes, preschools, nursery schools, Montessori schools, private kindergartens, day care homes and group day care homes; not to include group homes as defined herein

26) Off-street parking lots or off-street parking structures of a temporary or permanent nature;

27) Group boarding home for minors or adults; not to include group homes as defined herein.

28) Private ambulance service;

29) Bed and breakfast;

30) Horse pasturing on lots of less than 3 acres in residential districts.

31) Temporary self contained health care suites located within an attached garage are intended to provide an "in home" physical care facility as a temporary alternative to a nursing home environment. It is not intended to provide long term care lodging for anyone that would be better served by a more permanent solution. Such permanent alternate solutions may require an alteration to the home, an addition onto the home, or off-site care by a health care institution. Such use is allowed as a special use provided the following conditions are met:

a) The suites are to be freestanding self contained units including independent heating and air conditioning units and plumbing systems.

b) Not more than 2 persons shall be housed in such suite provided said housing is necessitated by a physical impairment or health care need of one or both persons and said health care need is being met by occupant or occupants of the existing home. Said person(s) residing in such health care suite shall be either an occupant or a relative of the occupant of the home except in cases when an overnight health care provider is required.

c) A letter from a licensed doctor of medicine or osteopathy shall be submitted, along with the application for special use, verifying the need for such health care suite by the applicant or prospective resident of said suite.

d) Health care suites shall be limited to a maximum of 2 years duration. Such use may only be continued for 1 additional year and only after review and approval by the Plan Commission and City Council. Any amount of time beyond 3 years will require a permanent solution to be specified at the time the additional year is requested. Such solution shall be made a condition of approval if granted. At the end of the special use, the unit shall be removed and the garage restored to its former condition.

e) Any exterior modification of the home necessitated by the suite, such as the temporary removal of the garage door(s) to facilitate a private entry, windows, or heating or cooling units, shall be replaced with materials of an architectural likeness to the existing home. Samples of materials proposed to be used shall be submitted with the application for approval by the Plan Commission.

f) Additional written notification shall be required to the applicant's homes association and to all property owners within 200 feet of the applicant's property.

g) Because the installation of such health care suite temporarily removes the enclosed off-street parking spaces required by ordinance, the applicant shall submit an interim plan for dealing with off-street parking for the duration of the special use.

32) The Director of Planning may upon application by the proponent issue an Administrative Special Use Permit for the use of a specified parcel of land for such temporary short-term uses as trade shows, street fairs, expositions, promotional ventures, entertainment, seasonal sales, balloons, search lights, and tents, provided the following conditions are met:

a) The applicant shall submit in written form a complete description of the proposed use, including estimated accumulation of automobiles and persons, hours of operation, and other characteristics and effects on the neighborhood.

b) The applicant shall submit a site plan showing the location of any proposed structure.

CONTINUED ON PAGE 18

CONTINUED FROM PAGE 17

c) The short-term special use shall not be operated longer than 10 consecutive days.

d) No more than 3 special event permits per calendar year shall be issued administratively at any location. Any additional permits may be granted by the Governing Body.

e) Upon the cessation of the short-term special use, all materials and equipment shall be promptly removed and the property restored to its normal condition.

f) Any structure used in conjunction with the special event shall be the subject of a valid building permit or tent permit.

g) The special event shall not cause undue traffic congestion or accident potential given anticipated attendance and the design of adjacent streets, intersections, and traffic controls.

h) The activity shall not cause the overcrowding of parking facilities given anticipated attendance and the possible reduction in the number of available spaces used by the event itself.

i) The special event shall not impair the usefulness, enjoyment or value of adjacent property due to the generation of excessive noise, smoke, odor, glare, litter or visual pollution.

j) If, after giving full consideration to the effect of the requested special use on the neighborhood and the community, the Director of Planning deems the special use reasonable, the special use permit for the short-term use may be approved. Conditions of operation, provision for surety bond, and other reasonable safeguards may be written into the special use permit. Such permit may be approved in any zoning district.

k) Any applicant denied an Administrative Special Use Permit shall be notified in writing of the reasons for the denial and of the opportunity to appeal the denial to the Governing Body.

4-3.2 Revocation of special use permits

1) Basis for Revocation

Any special use permit granted under the authority of this chapter is subject to revocation for any or all of the following reasons:

a) Non-compliance with any applicable requirement set forth in Section 4-3.1.

b) Non-compliance with any special conditions imposed at the time of approval of the special use permit.

c) Violation of any provisions of the Code pertaining to the use of the land, construction or uses of buildings or structures or activities conducted on the premises by the applicant or agents of the applicant.

d) Violation of any other applicable Code provisions or any state or federal law or regulation by the applicant or agents of the applicant, provided that such violations relate to the conduct or activity authorized by the special use permit or the qualifications of the applicant or its agents to engage in such conduct or activity.

2) Procedure for revocation

a) Revocation proceedings may be initiated by a majority vote of the Governing Body.

b) Unless the applicant and landowner agree in writing that the permit may be revoked, the Governing Body shall hold a public hearing to consider the revocation of the special use permit.

c) The City shall give the applicant and landowner certified mail notice, return receipt requested, of the scheduled revocation hearing at least five days prior to the date scheduled for such hearing. Notice must be published in the official newspaper a minimum of 5 days but not greater than 20 days prior to the hearing.

d) No special use permit shall be revoked unless a majority of the governing Body is satisfied by a preponderance of the evidence that grounds for revocation exist. Any motion of the revocation must clearly state the grounds for revocation. Adoption of any motion to revoke a special use permit may be made subject to subsequent adoption of written findings of fact and conclusions of law, at the discretion of the Governing Body.

e) An appeal of any decision of the Governing Body to revoke a special use permit may be filed in the District Court of Johnson County, Kansas. Any appeal taken shall not suspend the order of revocation during the pending appeal unless so ordered by the District Court.

Section 2. Repeal of Existing Section. That existing Section 4-3 of the "Amendment to Leawoo Development Ordinance" is hereby repealed. (Prior law: Ordinance No. 1636)

Section 3. Take Effect. That this ordinance shall take effect and be in force from and after its publicatio in the official City newspaper.

Passed by the Council the 06th day of January, 1997.

Approved by the Mayor the 6th day of January, 1997.

(SEAL)

Marcia Rinehart, Mayor

Attest:

Marilna Heizer, City Clerk

APPROVED FOR FORM: /s/ R.S. Wetzler

R.S. Wetzler, City Attorney

ORDINANCE NO. 1640

AN ORDINANCE ADOPTING AN AMENDMENT TO THE LEAWOOD, KANSAS, 1993 MASTER DEVELOPMENT PLAN MAP.

WHEREAS, the Plan Commission of the City of Leawood has previously adopted the Master Development Plan Map for the City pursuant to the authority granted by Kansas Statutes; and

WHEREAS, a certified copy of the Master Development Plan Map, adopted by the Plan Commission, was adopted by the Governing Body December 21, 1992; and

WHEREAS, pursuant to K.S.A. 12-747, the Master Development Plan Map adopted by the Plan Commission and any current amendments must be adopted by the Governing Body prior to its becoming effective; and

WHEREAS, a certified copy of the Amendment to the 1993 Master Development Plan Map as adopted by the Plan Commission on December 06, 1996, together with written summary of the Public Hearing thereon, have been submitted to the Governing Body;

NOW, THEREFORE, BE IT ORDAINED BY THE GOVERNING BODY OF THE CITY OF LEAWOOD:

Section 1. That the Governing Body of the City of Leawood, Kansas, hereby adopts Amendment to the 1993 Master Development Plan Map. The adopted amendment to the 1993 Master Development Plan Map modifies the Plan Map by changing a term, from "Planned Business District" to "Special Development District".

Section 2. That there is hereby incorporated by reference the above-described amendment to the 1993 Master Development Plan Map, adopted by the Plan Commission of the City of Leawood on December 06, 1996, and adopted by the Governing Body on January 06, 1997, as set forth in Section 1 of this ordinance, such incorporation by reference being authorized by K.S.A. 12-3009 to and including 12-3012. Not less than three (3) copies of the Ordinance, to each of which shall be attached a copy of the Master Development Plan Map, 1993 Amendment, as adopted January 06, 1997, marked as or stamped "Official copy", shall be filed with the City clerk to be open to inspection and available to the public at all reasonable business hours.

term change only

Section 3. That this ordinance shall take effect and be in force from and after its publication in the official City newspaper.

Passed by the Council the 6th day of January, 1997.

Approved by the Mayor the 6th day of January, 1997.

(SEAL)

Marcia Rinehart
Marcia Rinehart Mayor

Attest:

Martha Heizer
Martha Heizer City Clerk

APPROVED FOR FORM:
R. S. Wetzler City Attorney

ORD1640

Publication Fees: $21.63

The Legal Record
600 E. Santa Fe, Suite 4
Olathe, KS 66061-3700

CITY OF LEAWOOD
ATTN: MARTHA HEIZER
4800 TOWN CENTER DR
LEAWOOD, KS 66211

Proof of Publication

STATE OF KANSAS, JOHNSON COUNTY, SS:
Tammy Schwien, of lawful age, being first duly sworn, deposes and says that she is Legal Notices Administrator of The Legal Record which is a newspaper printed in the State of Kansas, published in and of general paid circulation on a weekly, monthly or yearly basis in Johnson County, Kansas, is not a trade, religious or fraternal publication, is published at least weekly fifty (50) times a year, has been so published continuously and uninterrupted in said County and State for a period of more than five (5) years prior to the first publication of the notice attached, and has been admitted at the post office as second class matter (now called periodicals class).
That a notice was published in all editions of the regular and entire issue for the following subject matter (also identified by the following case number, if any) for 1 consecutive week(s), as follows:

ORDINANCE NO. 1640--1/14/97

Tammy Schwien
Legal Notices Administrator

Subscribed and sworn to before me on this date:
January 15, 1997

Debra Dziadura
Notary Public

DEBRA DZIADURA
Notary Public - State of Kansas

My appointment expires: August 21, 1999.

$21.63

ORDINANCE NO. 1640

First published in The Legal Record, Tuesday, January 14, 1997.

ORDINANCE NO. 1640

AN ORDINANCE ADOPTING AN AMENDMENT TO THE LEAWOOD, KANSAS, 1993 MASTER DEVELOPMENT PLAN MAP.

WHEREAS, the Plan Commission of the City of Leawood has previously adopted the Master Development Plan Map for the City pursuant to the authority granted by Kansas Statutes; and

WHEREAS, a certified copy of the Master Development Plan Map, adopted by the Plan Commission, was adopted by the Governing Body December 21, 1992; and

WHEREAS, pursuant to K.S.A. 12-747, the Master Development Plan Map adopted by the Plan Commission and any current amendments must be adopted by the Governing Body prior to its becoming effective; and

WHEREAS, a certified copy of the Amendment to the 1993 Master Development Plan Map as adopted by the Plan Commission on December 06, 1996, together with written summary of the Public Hearing thereon, have been submitted to the Governing Body:

NOW, THEREFORE, BE IT ORDAINED BY THE GOVERNING BODY OF THE CITY OF LEAWOOD:

Section 1. That the Governing Body of the City of Leawood, Kansas, hereby adopts Amendment to the 1993 Master Development Plan Map. The adopted amendment to the 1993 Master Development Plan Map modifies the Plan Map by changing a term, from "Planned Business District" to "Special Development District".

Section 2. That there is hereby incorporated by reference the above-described amendment to the 1993 Master Development Plan Map, adopted by the Plan Commission of the City of Leawood on December 06, 1996, and adopted by the Governing Body on January 06, 1997, as set forth in Section 1 of this ordinance, such incorporation by reference being authorized by K.S.A. 12-3009 to and including 12-3012. Not less than three (3) copies of the Ordinance, to each of which shall be attached a copy of the Master Development Plan Map, 1993 Amendment, as adopted January 06, 1997, marked as or stamped "Official copy", shall be filed with the City clerk to be open to inspection and available to the public at all reasonable business hours.

Section 3. That this ordinance shall take effect and be in force from and after its publication in the official City newspaper.

Passed by the Council the 6th day of January, 1997.

Approved by the Mayor the 6th day of January, 1997.

(SEAL)

Marcia Rinehart — Mayor

Attest:

Martha Heizer — City Clerk

APPROVED FOR FORM: /s/ R.S. Wetzler

R. S. Wetzler — City Attorney

ORDINANCE NO. 1639

AN ORDINANCE VACATING A PART OF THE RIGHT-OF-WAY LOCATED AT 115TH STREET, BETWEEN ROE AVENUE AND ROSEWOOD AVENUE AND ADJACENT TO LEAWOOD COUNTRY MANOR, FIFTH PLAT, AND LEAWOOD COUNTRY MANOR, EIGHTH PLAT, CITY OF LEAWOOD, JOHNSON COUNTY, KANSAS.

WHEREAS, the Governing Body of the City of Leawood, Kansas, has determined that it is necessary and expedient to vacate that portion of the right-of-way located at 115th Street between Roe Avenue and Rosewood Avenue (the "Right-of-Way"); and

WHEREAS, the City of Leawood is the owner of the Right-of-Way located between the subdivisions of Leawood Country Manor and Edgewood; and

WHEREAS, the City of Leawood no longer has any need or use for said Right-of-Way and desires to vacate the Right-of-Way; and

WHEREAS, pursuant to K.S.A. 14-423, a right of way, as vacated, is to revert to the owners of real estate thereto adjacent on each side in proportion to the frontage of such real estate; and

WHEREAS, it is the desire of the City of Leawood, by this Ordinance, to vacate the Right-of-Way conveyed to the City of Leawood in connection with the platting of Leawood County Manor as 115th Street between Roe Avenue and Rosewood Avenue and return it to the adjacent lots of real estate in proportion from which it came; and

WHEREAS, Lot 14-A, Block 8, of Leawood Country Manor shall revert to the owner of Lot 14, Block 8, of Leawood Country Manor; Lot 15-A, Block 8, of Leawood Country Manor shall revert to the owner of Lot 15, Block 8, of Leawood Country Manor; Lot 16-A, Block 8, of Leawood Country Manor shall revert to the owner of Lot 16, Block 8, of Leawood Country Manor; Lot 13-A, Block 9, of Leawood Country Manor shall revert to the owner of Lot 13, Block 9, of Leawood Country Manor; Lot 14-A, Block 9, of Leawood Country Manor shall revert to the owner of Lot 14, Block 9, of Leawood Country Manor; Lot 15-A, Block 9, of Leawood Country Manor shall revert to the owner of Lot 15, Block 9, of Leawood Country Manor; Lot 16-A, Block 9, of Leawood Country Manor shall revert to the owner of Lot 16, Block 9, of Leawood Country Manor; Lot 17-A, Block 9, of Leawood Country Manor shall revert to the owner of Lot 17, Block 9, of Leawood Country Manor; Lot 18-A, Block 9, of Leawood Country Manor shall revert to the owner of Lot 18, Block 9, of Leawood Country Manor; Lot 19-A, Block 9, of Leawood Country Manor shall revert to the owner of Lot 19, Block 9, of Leawood Country Manor; and Tract B-A of Leawood Country Manor shall revert

to the owner of Tract B of Leawood Country Manor, all as shown on the Plat of Leawood Country Manor, Tenth Plat, City of Leawood, County of Johnson, State of Kansas.

NOW THERFORE, BE IT ORDAINED BY THE GOVERNING BODY OF THE CITY OF LEAWOOD:

Section I:

That vacation of the Right-of-Way located at 115th Street between Roe Avenue and Rosewood Avenue and legally described as:

Lots 14-A, 15-A and 16-A of Block 8; Lots 13-A, 14-A, 15-A, 16-A, 17-A, 18-A and 19-A of Block 9; and Tract B-A, all as shown on the Plat of Leawood Country Manor, Tenth Plat, as recorded with the Johnson County, Kansas Register of Deeds on November 30, 1993, as Document number 2328946, in Book 85 at Page 43; situated in the City of Leawood, County of Johnson, State of Kansas.

is necessary and expedient and that such Right-of-Way should be vacated and that the same should revert to the owners of the land adjacent thereto as prescribed by law.

Section II

This ordinance shall take effect within 30 days of its publication as provided by law, unless written protest is filed within said 30 days with the City Clerk of the City of Leawood, Kansas.

Passed by the Council the 16th day of December, 1996.

Approved by the Mayor the 16th day of December, 1996.

ATTEST: (S E A L)

Marcia Rinehart
MARCIA RINEHART, Mayor

Martha Heizer
MARTHA HEIZER, City Clerk

APPROVED AS TO FORM:

RICHARD S. WETZLER, City Attorney

City of Leawood

4800 Town Center Drive • Leawood, Kansas 66211 • (913) 339-6700
(913) 339- 6781 Fax
(913) 339-6225 TDD

January 17, 1997

TO: Beverly Baker, County Clerk
~~Sara~~ Ullmann, Register of Deeds

FROM: Martha Heizer, City Clerk

Please file the enclosed certified copy of Ordinance No. 1639 in your office in accordance with state statute.

Thank you.

Martha Heizer

2670615

STATE OF KANSAS }
COUNTY OF JOHNSON } SS
FILED FOR RECORD

no chg

1997 JAN 21 P 3: 19 .7

SARA F. ULLMANN
REGISTER OF DEEDS

ORDINANCE NO. 1639

AN ORDINANCE VACATING A PART OF THE RIGHT-OF-WAY LOCATED AT 115TH STREET, BETWEEN ROE AVENUE AND ROSEWOOD AVENUE AND ADJACENT TO LEAWOOD COUNTRY MANOR, FIFTH PLAT, AND LEAWOOD COUNTRY MANOR, EIGHTH PLAT, CITY OF LEAWOOD, JOHNSON COUNTY, KANSAS.

WHEREAS, the Governing Body of the City of Leawood, Kansas, has determined that it is necessary and expedient to vacate that portion of the right-of-way located at 115th Street between Roe Avenue and Rosewood Avenue (the "Right-of-Way"); and

WHEREAS, the City of Leawood is the owner of the Right-of-Way located between the subdivisions of Leawood Country Manor and Edgewood; and

WHEREAS, the City of Leawood no longer has any need or use for said Right-of-Way and desires to vacate the Right-of-Way; and

WHEREAS, pursuant to K.S.A. 14-423, a right of way, as vacated, is to revert to the owners of real estate thereto adjacent on each side in proportion to the frontage of such real estate; and

WHEREAS, it is the desire of the City of Leawood, by this Ordinance, to vacate the Right-of-Way conveyed to the City of Leawood in connection with the platting of Leawood County Manor as 115th Street between Roe Avenue and Rosewood Avenue and return it to the adjacent lots of real estate in proportion from which it came; and

WHEREAS, Lot 14-A, Block 8, of Leawood Country Manor shall revert to the owner of Lot 14, Block 8, of Leawood Country Manor; Lot 15-A, Block 8, of Leawood Country Manor shall revert to the owner of Lot 15, Block 8, of Leawood Country Manor; Lot 16-A, Block 8, of Leawood Country Manor shall revert to the owner of Lot 16, Block 8, of Leawood Country Manor; Lot 13-A, Block 9, of Leawood Country Manor shall revert to the owner of Lot 13, Block 9, of Leawood Country Manor; Lot 14-A, Block 9, of Leawood Country Manor shall revert to the owner of Lot 14, Block 9, of Leawood Country Manor; Lot 15-A, Block 9, of Leawood Country Manor shall revert to the owner of Lot 15, Block 9, of Leawood Country Manor; Lot 16-A, Block 9, of Leawood Country Manor shall revert to the owner of Lot 16, Block 9, of Leawood Country Manor; Lot 17-A, Block 9, of Leawood Country Manor shall revert to the owner of Lot 17, Block 9, of Leawood Country Manor; Lot 18-A, Block 9, of Leawood Country Manor shall revert to the owner of Lot 18, Block 9, of Leawood Country Manor; Lot 19-A, Block 9, of Leawood Country Manor shall revert to the owner of Lot 19, Block 9, of Leawood Country Manor; and Tract B-A of Leawood Country Manor shall revert

no chg

to the owner of Tract B of Leawood Country Manor, all as shown on the Plat of Leawood Country Manor, Tenth Plat, City of Leawood, County of Johnson, State of Kansas.

NOW THERFORE, BE IT ORDAINED BY THE GOVERNING BODY OF THE CITY OF LEAWOOD:

Section I:

That vacation of the Right-of-Way located at 115th Street between Roe Avenue and Rosewood Avenue and legally described as:

Lots 14-A, 15-A and 16-A of Block 8; Lots 13-A, 14-A, 15-A, 16-A, 17-A, 18-A and 19-A of Block 9; and Tract B-A, all as shown on the Plat of Leawood Country Manor, Tenth Plat, as recorded with the Johnson County, Kansas Register of Deeds on November 30, 1993, as Document number 2328946, in Book 85 at Page 43; situated in the City of Leawood, County of Johnson, State of Kansas.

is necessary and expedient and that such Right-of-Way should be vacated and that the same should revert to the owners of the land adjacent thereto as prescribed by law.

Section II

This ordinance shall take effect within 30 days of its publication as provided by law, unless written protest is filed within said 30 days with the City Clerk of the City of Leawood, Kansas.

Passed by the Council the 16th day of December, 1996.

Approved by the Mayor the 16th day of December, 1996.

ATTEST: (S E A L)

Marcia Rinehart
MARCIA RINEHART, Mayor

Martha Heizer
MARTHA HEIZER, City Clerk

APPROVED AS TO FORM:

RICHARD S. WETZLER, City Attorney

CERTIFICATE

State of Kansas
County of Johnson
City of Leawood

I, Martha Heizer, City Clerk of the City of Leawood, Kansas, hereby certify that the attached is a true and correct copy of Ordinance No. 1639 as the same appears in my office.

In testimony whereof, I have hereunto signed my name and affixed the seal of said city this 17th day of January, 1997.

(S E A L)

Martha Heizer

Martha Heizer, City Clerk

ORD1639

Publication Fees: $15.63

The Legal Record
600 E. Santa Fe, Suite 4
Olathe, KS 66061-3700

CITY OF LEAWOOD
ATTN: MARTHA HEIZER
4800 TOWN CENTER DR
LEAWOOD, KS 66211

Proof of Publication

STATE OF KANSAS, JOHNSON COUNTY, SS;
Tammy Schwien, of lawful age, being first duly sworn, deposes and says that she is Legal Notices Administrator of The Legal Record which is a newspaper printed in the State of Kansas, published in and of general paid circulation on a weekly, monthly or yearly basis in Johnson County, Kansas, is not a trade, religious or fraternal publication, is published at least weekly fifty (50) times a year, has been so published continuously and uninterrupted in said County and State for a period of more than five (5) years prior to the first publication of the notice attached, and has been admitted at the post office as second class matter (now called periodicals class).
That a notice was published in all editions of the regular and entire issue for the following subject matter (also identified by the following case number, if any) for 1 consecutive week(s), as follows:

ORDINANCE NO. 1639--12/17/96

Tammy Schwien
Legal Notices Administrator

Subscribed and sworn to before me on this date:
December 18, 1996

Debra Dziadura
Notary Public

DEBRA DZIADURA
Notary Public - State of Kansas

My appointment expires: August 21, 1999.

$15.63

ORDINANCE NO. 1639

First published in The Legal Record, Tuesday, December 17, 1996.

ORDINANCE NO. 1639

AN ORDINANCE VACATING A PART OF THE RIGHT-OF-WAY LOCATED AT 115TH STREET, BETWEEN ROE AVENUE AND ROSEWOOD AVENUE AND ADJACENT TO LEAWOOD COUNTRY MANOR, FIFTH PLAT, AND LEAWOOD COUNTRY MANOR, EIGHTH PLAT, CITY OF LEAWOOD, JOHNSON COUNTY, KANSAS.

WHEREAS, the Governing Body of the City of Leawood, Kansas, has determined that it is necessary and expedient to vacate that portion of the right-of-way located at 115th Street between Roe Avenue and Rosewood Avenue (the "Right-of-Way"); and

WHEREAS, the City of Leawood is the owner of the Right-of-Way located between the subdivisions of Leawood Country Manor and Edgewood; and

WHEREAS, the City of Leawood no longer has any need or use for said Right-of-Way and desires to vacate the Right-of-Way; and

WHEREAS, pursuant to K.S.A. 14-423, a right of way, as vacated, is to revert to the owners of real estate thereto adjacent on each side in proportion to the frontage of such real estate; and

WHEREAS, it is the desire of the City of Leawood, by this Ordinance, to vacate the Right-of-Way conveyed to the City of Leawood in connection with the platting of Leawood County Manor as 115th Street between Roe Avenue and Rosewood Avenue and return it to the adjacent lots of real estate in proportion from which it came; and

WHEREAS, Lot 14-A, Block 8, of Leawood Country Manor shall revert to the owner of Lot 14, Block 8, of Leawood Country Manor; Lot 15-A, Block 8, of Leawood Country Manor shall revert to the owner of Lot 15, Block 8, of Leawood Country Manor; Lot 16-A, Block 8, of Leawood Country Manor shall revert to the owner of Lot 16, Block 8, of Leawood Country Manor; Lot 13-A, Block 9, of Leawood Country Manor shall revert to the owner of Lot 13, Block 9, of Leawood Country Manor; Lot 14-A, Block 9, of Leawood Country Manor shall revert to the owner of Lot 14, Block 9, of Leawood Country Manor; Lot 15-A, Block 9, of Leawood Country Manor shall revert to the owner of Lot 15, Block 9, of Leawood Country Manor; Lot 16-A, Block 9, of Leawood Country Manor shall revert to the owner of Lot 16, Block 9, of Leawood Country Manor; Lot 17-A, Block 9, of Leawood Country Manor shall revert to the owner of Lot 17, Block 9, of Leawood Country Manor; Lot 18-A, Block 9, of Leawood Country Manor shall revert to the owner of Lot 18, Block 9, of Leawood Country Manor; Lot 19-A, Block 9, of Leawood Country Manor shall revert to the owner of Lot 19, Block 9, of Leawood Country Manor; and Tract B-A of Leawood Country Manor shall revert to the owner of Tract B of Leawood Country Manor, all as shown on the Plat of Leawood Country Manor, Tenth Plat, City of Leawood, County of Johnson, State of Kansas.

NOW THERFORE, BE IT ORDAINED BY THE GOVERNING BODY OF THE CITY OF LEAWOOD:

Section I:

That vacation of the Right-of-Way located at 115th Street between Roe Avenue and Rosewood Avenue and legally described as:

Lots 14-A, 15-A and 16-A of Block 8; Lots 13-A, 14-A, 15-A, 16-A, 17-A, 18-A and 19-A of Block 9; and Tract B-A, all as shown on the Plat of Leawood Country Manor, Tenth Plat, as recorded with the Johnson County, Kansas Register of Deeds on November 30, 1993, as Document number 2328946, in Book 85 at Page 43; situated in the City of Leawood, County of Johnson, State of Kansas.

is necessary and expedient and that such Right-of-Way should be vacated and that the same should revert to the owners of the land adjacent thereto as prescribed by law.

Section II

This ordinance shall take effect within 30 days of its publication as provided by law, unless written protest is filed within said 30 days with the City Clerk of the City of Leawood, Kansas.

Passed by the Council the 16th day of December, 1996.

Approved by the Mayor the 16th day of December, 1996.

ATTEST: (S E A L)

Marcia Rinehart
MARCIA RINEHART, Mayor

Martha Heizer
MARTHA HEIZER, City Clerk

APPROVED AS TO FORM:

RICHARD S. WETZLER, City Attorney

ORDINANCE NO. 1638

AN ORDINANCE QUIT CLAIMING THREE TRACTS OF REAL ESTATE LOCATED AT MISSION ROAD ALONG INDIAN CREEK NEAR THE INTERSECTION OF COLLEGE BOULEVARD AND TOMAHAWK CREEK PARKWAY

WHEREAS, the Governing Body of the City of Leawood, Kansas (the "City"), has determined that it is necessary and expedient to grant to Marshall Long and Betty Clark Long (the "Longs") by Quit Claim Deed three small tracts of real estate located at Mission Road along Indian Creek near the intersection of College Boulevard and Tomahawk Creek Parkway (the "Property"); and

WHEREAS, the City is the current owner of the Property; and

WHEREAS, the Longs own real estate adjoining the Property; and

WHEREAS, the City and the Longs did make an agreement on or about February 6, 1995 where the City and the Longs exchange certain proeprty interests; and

WHEREAS, the Longs conveyed a temporary construction easement to the City and in exchange for the conveyance of the temporary construction easement the City agreed to convey the Property to the Longs; and

WHEREAS, the City of Leawood no longer has any need or use for said Property and desires to quit claim the Property to the Longs; and

WHEREAS, it is the desire of the City of Leawood, by this Ordinance, to convey the Property to the Longs in accordance with their agreement; and

NOW THEREFORE, BE IT ORDAINED BY THE GOVERNING BODY OF THE CITY OF LEAWOOD:

Section 1

The Governing Body of the City does authorize the Mayor to execute a Quit Claim Deed from the City of Leawood granting to Marshall Long and Betty Clark Long the Property legally described on Exhibits A, B and C, and depicted on Exhibit D as Tract A, Tract C and Tract E, City of Leawood, Johnson County, Kansas.

Section 2

This ordinance shall take effect and be in force from and after its publication in the official city newspaper.

PASSED AND APPROVED BY THE COUNCIL THIS 16th DAY OF DECEMBER, 1996.

APPROVED BY THE MAYOR THIS 16th DAY OF DECEMBER, 1996.

(S E A L)

MARCIA RINEHART, Mayor

ATTEST:

MARTHA HEIZER, City Clerk

APPROVED AS TO FORM:

RICHARD S. WETZLER, City Attorney

EXHIBIT A

LEGAL DESCRIPTION FOR
PART OF MISSION ROAD RIGHT-OF-WAY LYING WITHIN SW ¼
SECTION 10-13-25
(TRACT "A")
CITY OF LEAWOOD
JOHNSON COUNTY, KANSAS

All that part of Mission Road right-of-way, lying within the SE ¼ of the SW ¼ of Section 10, Township 13, Range 25, now in the City of Leawood, Johnson County, Kansas, more particularly described as follows: Commencing at the Southwest corner of the SW ¼ of said Section 10; thence N 87°50'04" E, along the South line of the SW ¼ of the SW ¼ of said Section 10, a distance of 1324.51 feet, to the Southeast corner thereof, said point also being the Southwest corner of the SE ¼ of the SW ¼ of said Section 10, said point also being the true point of beginning of subject tract; thence N 1°55'24" W, along the West line of the SE ¼ of the SW ¼ of said Section 10, a distance of 269.70 feet; thence Southeasterly, along a curve to the right, having a radius of 210 feet, a central angle of 26°59'19", and whose initial tangent bearing is S 52°25'47" E, a distance of 98.92 feet, to a point 59 feet East of the West line of the SE ¼ of the SW ¼ of said Section 10; thence S 1°55'24" E, along a line 59 feet East of and parallel to the West line of the SE ¼ of the SW ¼ of said Section 10, a distance of 191.19 feet, to a point on the South line thereof; thence S 87°50'04" W, along the South line of the SE ¼ of the SW ¼ of said Section 10, a distance of 59 feet, to the true point of beginning of subject tract, all subject to that part thereof dedicated for College Boulevard right-of-way.

EXHIBIT B

PART OF MISSION ROAD RIGHT-OF-WAY LYING WITHIN SW ¼
SECTION 10-13-25
(TRACT "C")
CITY OF LEAWOOD
JOHNSON COUNTY, KANSAS

All that part of Mission Road right-of-way, lying within the SW ¼ of the SW ¼ of Section 10, Township 13, Range 25, now in the City of Leawood, Johnson County, Kansas, more particularly described as follows: Commencing at the Southwest corner of the SW ¼ of said Section 10; thence N 87°50'04" E, along the South line of the SW ¼ of the SW ¼ of said Section 10, a distance of 1324.51 feet, to the Southeast corner thereof, thence N 1°55'24" W, along the East line of the SW ¼ of the SW ¼ of said Section 10, a distance of 284.06 feet, to a point on the Southerly right-of-way line of Mission road, as now established; thence

Northwesterly, along the Southerly right-of-way line of said Mission Road, said line being on a curve to the left, having a radius of 245.17 feet, a central angle of 0°12'19", and whose initial tangent bearing is N 72°57'37" W, a distance of 0.88 feet, to a point of tangency; thence N 73°09'56" W, along the Southerly right-of-way line of said Mission Road, a distance of 164.18 feet, to a point 337.80 feet North of the South line of the SW ¼ of the SW ¼ of said Section 10, said point also being the true point of beginning of subject tract; thence S 87° 50'04" W, along the Southerly right-of-way line of said Mission Road, a distance of 103.70 feet, to a point 260 feet West of the East line of the SW ¼ of the SW ¼ of said Section 10; thence N 1°55'24" W, along the Southerly right-of-way line of said Mission Road, and along a line 260 feet West of and parallel to the East line of the SW ¼ of the SW ¼ of said Section 10, a distance of 35.66 feet; thence S 73°09'56" E, a distance of 109.53 feet, to the true point of beginning of subject tract.

EXHIBIT C

LEGAL DESCRIPTION FOR
PART OF MISSION ROAD RIGHT-OF-WAY LYING WITHIN SW ¼
SECTION 10-13-25
(TRACT "E")
CITY OF LEAWOOD
JOHNSON COUNTY, KANSAS

That part of the SW ¼ of Section 10, Township 13, Section 25, consisting of Mission Road adjacent to and abutting to the East of Lots 42 through 45, inclusive, LONGWOOD FOREST, a subdivision in the City of Leawood, Johnson County, Kansas, according to the recorded plat thereof and as said Mission Road is shown on said plat.

EXHIBIT D

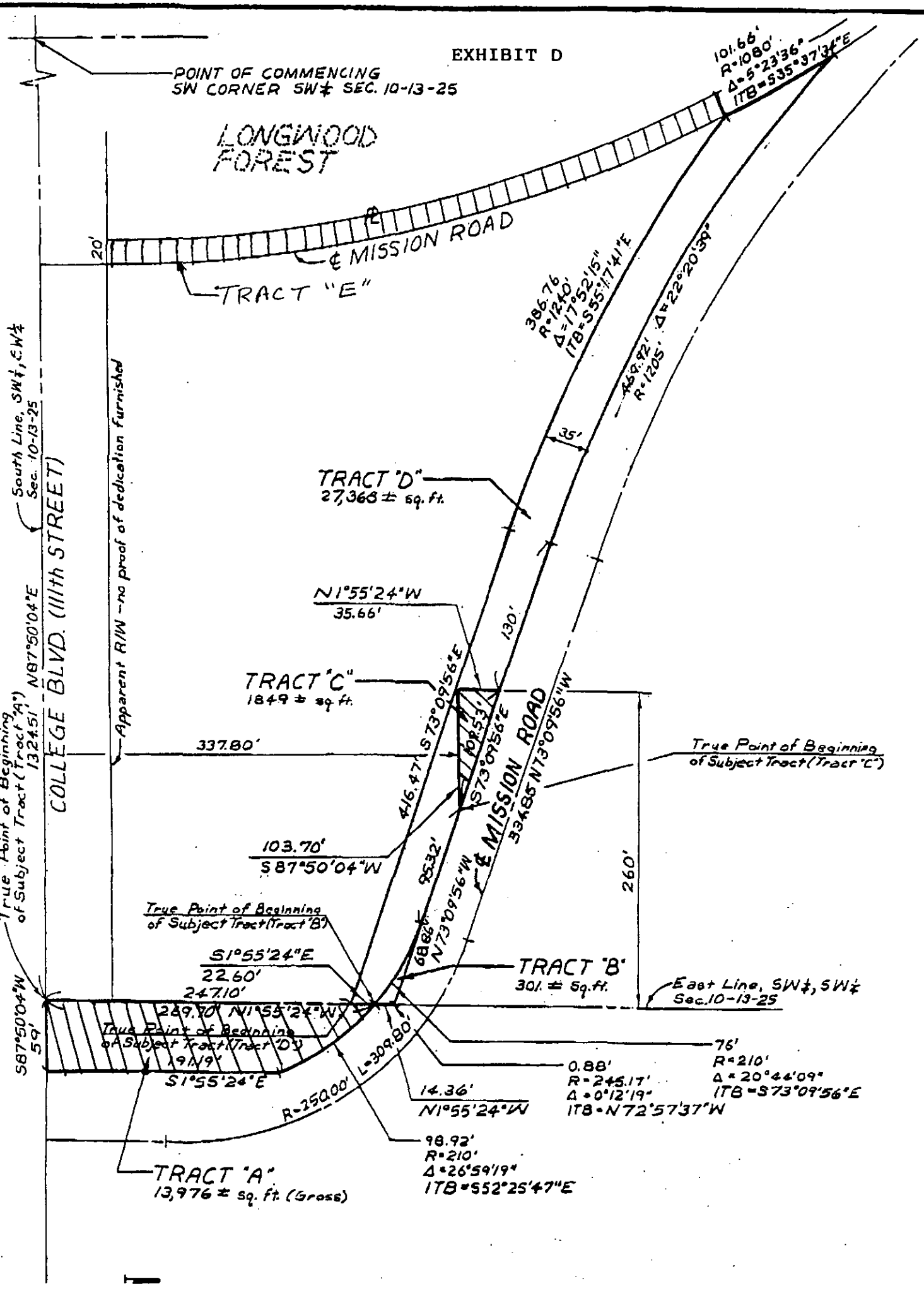
POINT OF COMMENCING
SW CORNER SW¼ SEC. 10-13-25
LONGWOOD FOREST
℄ MISSION ROAD
TRACT "E"
20'
101.66'
R=1080'
Δ=5°23'36"
ITB=S35°37'34"E
386.76
R=1240'
Δ=17°52'15"
ITB=S55°17'41"E
469.92'
R=1205'
Δ=22°20'39"
35'
South Line, SW¼, SW¼
Sec. 10-13-25
COLLEGE BLVD. (111th STREET)
Apparent R/W - no proof of dedication furnished
TRACT "D"
27,368 ± sq. ft.
N1°55'24"W
35.66'
130'
TRACT "C"
1849 ± sq. ft.
S73°09'56"E
108.53'
S73°09'56"E
N87°50'04"E
1324.51'
True Point of Beginning of Subject Tract (Tract "A")
337.80'
446.47'
℄ MISSION ROAD
334.85 N73°09'56"W
True Point of Beginning of Subject Tract (Tract "C")
103.70'
S87°50'04"W
95.32'
260'
True Point of Beginning of Subject Tract (Tract "B")
S1°55'24"E
22.60'
68.86'
N73°09'56"W
TRACT "B"
301. ± sq. ft.
East Line, SW¼, SW¼
Sec. 10-13-25
247.10'
289.70' N1°55'24"W
True Point of Beginning of Subject Tract (Tract "D")
S87°50'04"W
59'
191.19'
S1°55'24"E
L=309.80'
R=250.00'
76'
R=210'
Δ=20°44'09"
ITB=S73°09'56"E
0.88'
R=245.17'
Δ=0°12'19"
ITB=N72°57'37"W
14.36'
N1°55'24"W
98.92'
R=210'
Δ=26°59'19"
ITB=S52°25'47"E
TRACT "A"
13,976 ± sq. ft. (Gross)

ORD1638

Publication Fees: $79.26

The Legal Record
600 E. Santa Fe, Suite 4
Olathe, KS 66061-3700

CITY OF LEAWOOD
ATTN: MARTHA HEIZER
4800 TOWN CENTER DR
LEAWOOD, KS 66211

Proof of Publication

STATE OF KANSAS, JOHNSON COUNTY, SS;
Tammy Schwien, of lawful age, being first duly sworn, deposes and says that she is Legal Notices Administrator of The Legal Record which is a newspaper printed in the State of Kansas, published in and of general paid circulation on a weekly, monthly or yearly basis in Johnson County, Kansas, is not a trade, religious or fraternal publication, is published at least weekly fifty (50) times a year, has been so published continuously and uninterrupted in said County and State for a period of more than five (5) years prior to the first publication of the notice attached, and has been admitted at the post office as second class matter (now called periodicals class).
That a notice was published in all editions of the regular and entire issue for the following subject matter (also identified by the following case number, if any) for 1 consecutive week(s), as follows:

ORDINANCE NO. 1638--12/24/96

Tammy Schwien
Legal Notices Administrator

Subscribed and sworn to before me on this date:
December 24, 1996

Debra Dziadura
Notary Public

DEBRA DZIADURA
Notary Public - State of Kansas

My appointment expires: August 21, 1999.

$79.26

ORDINANCE NO. 1638

First published in The Legal Record, Tuesday, December 24, 1996.

ORDINANCE NO. 1638

AN ORDINANCE QUIT CLAIMING THREE TRACTS OF REAL ESTATE LOCATED AT MISSION ROAD ALONG INDIAN CREEK NEAR THE INTERSECTION OF COLLEGE BOULEVARD AND TOMAHAWK CREEK PARKWAY

WHEREAS, the Governing Body of the City of Leawood, Kansas (the "City"), has determined that it is necessary and expedient to grant to Marshall Long and Betty Clark Long (the "Longs") by Quit Claim Deed three small tracts of real estate located at Mission Road along Indian Creek near the intersection of College Boulevard and Tomahawk Creek Parkway (the "Property"); and

WHEREAS, the City is the current owner of the Property; and

WHEREAS, the Longs own real estate adjoining the Property; and

WHEREAS, the City and the Longs did make an agreement on or about February 6, 1995 where the City and the Longs exchange certain proeprty interests; and

WHEREAS, the Longs conveyed a temporary construction easement to the City and in exchange for the conveyance of the temporary construction easement the City agreed to convey the Property to the Longs; and

WHEREAS, the City of Leawood no longer has any need or use for said Property and desires to quit claim the Property to the Longs; and

WHEREAS, it is the desire of the City of Leawood, by this Ordinance, to convey the Property to the Longs in accordance with their agreement; and

NOW THEREFORE, BE IT ORDAINED BY THE GOVERNING BODY OF THE CITY OF LEAWOOD:

Section 1

The Governing Body of the City does authorize the Mayor to execute a Quit Claim Deed from the City of Leawood granting to Marshall Long and Betty Clark Long the Property legally described on Exhibits A, B and C, and depicted on Exhibit D as Tract A, Tract C and Tract E, City of Leawood, Johnson County, Kansas.

Section 2

This ordinance shall take effect and be in force from and after its publication in the official city newspaper.

PASSED AND APPROVED BY THE COUNCIL THIS 16th DAY OF DECEMBER, 1996.

APPROVED BY THE MAYOR THIS 16th DAY OF DECEMBER, 1996.

(S E A L)

Marcia Rinehart

MARCIA RINEHART, Mayor

ATTEST:

Martha Heizer

MARTHA HEIZER, City Clerk

APPROVED AS TO FORM:

RICHARD S. WETZLER, City Attorney

EXHIBIT A

LEGAL DESCRIPTION FOR
PART OF MISSION ROAD RIGHT-OF-WAY LYING WITHIN SW ¼
SECTION 10-13-25
(TRACT "A")
CITY OF LEAWOOD
JOHNSON COUNTY, KANSAS

CONTINUED ON PAGE 27

CONTINUED FROM PAGE 26

All that part of Mission Road right-of-way, lying within the SE ¼ of the SW ¼ of Section 10, Township 13, Range 25, now in the City of Leawood, Johnson County, Kansas, more particularly described as follows: Commencing at the Southwest corner of the SW ¼ of said Section 10; thence N 87°50'04" E, along the South line of the SW ¼ of the SW ¼ of said Section 10, a distance of 1324.51 feet, to the Southeast corner thereof, said point also being the Southwest corner of the SE ¼ of the SW ¼ of said Section 10, said point also being the true point of beginning of subject tract; thence N 1°55'24" W, along the West line of the SE ¼ of the SW ¼ of said Section 10, a distance of 269.70 feet; thence Southeasterly, along a curve to the right, having a radius of 210 feet, a central angle of 26°59'19", and whose initial tangent bearing is S 52°25'47" E, a distance of 98.92 feet, to a point 59 feet East of the West line of the SE ¼ of the SW ¼ of said Section 10; thence S 1°55'24" E, along a line 59 feet East of and parallel to the West line of the SE ¼ of the SW ¼ of said Section 10, a distance of 191.19 feet, to a point on the South line thereof; thence S 87°50'04" W, along the South line of the SE ¼ of the SW ¼ of said Section 10, a distance of 59 feet, to the true point of beginning of subject tract, all subject to that part thereof dedicated for College Boulevard right-of-way.

EXHIBIT B

PART OF MISSION ROAD RIGHT-OF-WAY LYING WITHIN SW ¼
SECTION 10-13-25
(TRACT "C")
CITY OF LEAWOOD
JOHNSON COUNTY, KANSAS

All that part of Mission Road right-of-way, lying within the SW ¼ of the SW ¼ of Section 10, Township 13, Range 25, now in the City of Leawood, Johnson County, Kansas, more particularly described as follows: Commencing at the Southwest corner of the SW ¼ of said Section 10; thence N 87°50'04" E, along the South line of the SW ¼ of the SW ¼ of said Section 10, a distance of 1324.51 feet, to the Southeast corner thereof, thence N 1°55'24" W, along the East line of the SW ¼ of the SW ¼ of said Section 10, a distance of 284.06 feet, to a point on the Southerly right-of-way line of Mission road, as now established; thence

Northwesterly, along the Southerly right-of-way line of said Mission Road, said line being on a curve to the left, having a radius of 245.17 feet, a central angle of 0°12'19", and whose initial tangent bearing is N 72°57'37" W, a distance of 0.88 feet, to a point of tangency; thence N 73°09'56" W, along the Southerly right-of-way line of said Mission Road, a distance of 164.18 feet, to a point 337.80 feet North of the South line of the SW ¼ of the SW ¼ of said Section 10, said point also being the true point of beginning of subject tract; thence S 87° 50'04" W, along the Southerly right-of-way line of said Mission Road, a distance of 103.70 feet, to a point 260 feet West of the East line of the SW ¼ of the SW ¼ of said Section 10; thence N 1°55'24" W, along the Southerly right-of-way line of said Mission Road, and along a line 260 feet West of and parallel to the East line of the SW ¼ of the SW ¼ of said Section 10, a distance of 35.66 feet; thence S 73°09'56" E, a distance of 109.53 feet, to the true point of beginning of subject tract.

EXHIBIT C

LEGAL DESCRIPTION FOR
PART OF MISSION ROAD RIGHT-OF-WAY LYING WITHIN SW ¼
SECTION 10-13-25
(TRACT "E")
CITY OF LEAWOOD
JOHNSON COUNTY, KANSAS

That part of the SW ¼ of Section 10, Township 13, Section 25, consisting of Mission Road adjacent to and abutting to the East of Lots 42 through 45, inclusive, LONGWOOD FOREST, a subdivision in the City of Leawood, Johnson County, Kansas, according to the recorded plat thereof and as said Mission Road is shown on said plat.

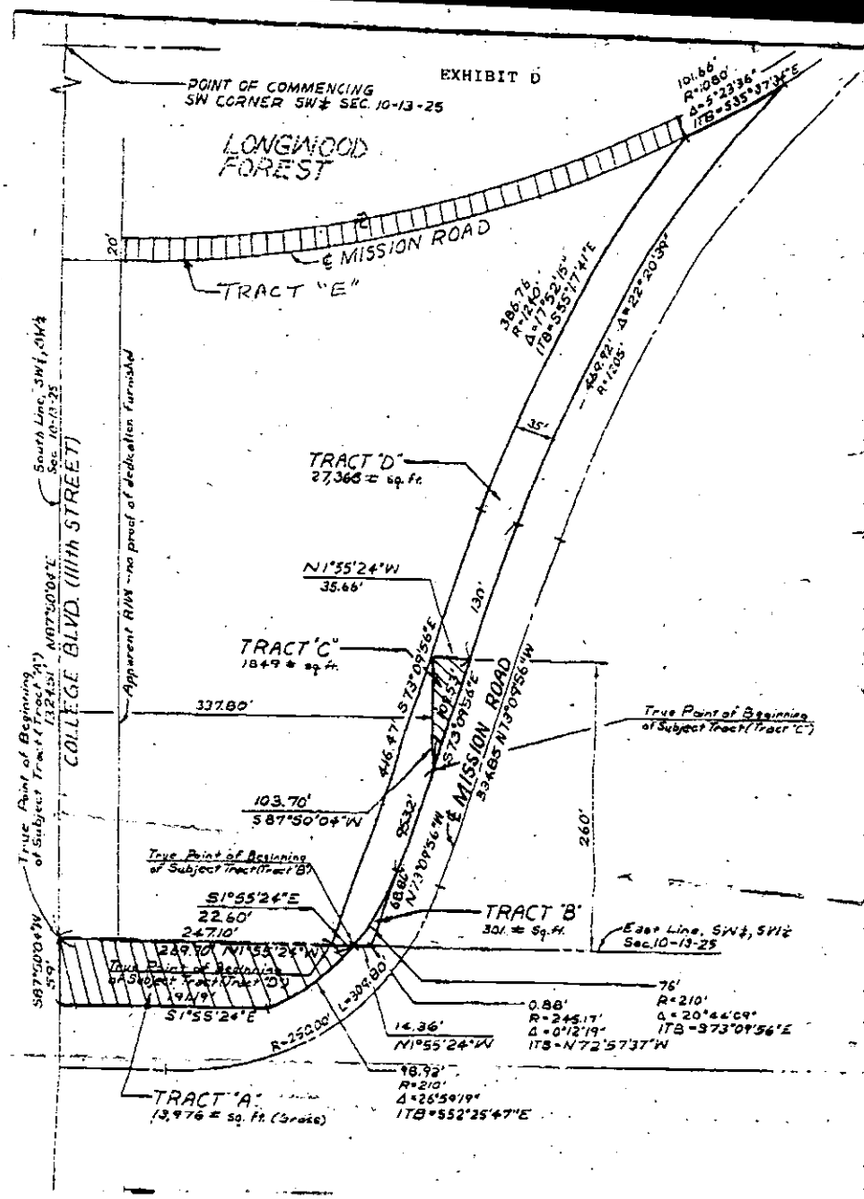

ORDINANCE NO. 1637

AN ORDINANCE AUTHORIZING AND PROVIDING FOR ACQUISITION OF PRIVATE PROPERTY FOR THE USE OF THE CITY AND AUTHORIZING SURVEY AND DESCRIPTION OF THE LAND AND INTEREST TO BE CONDEMNED.

WHEREAS, the Governing Body of the City of Leawood did by resolution approve on December 16, 1996, and declare the necessity of appropriating certain private property for the use of the City; and

WHEREAS, the Governing Body has previously authorized a survey and description of the land and interest to be condemned to be made by some competent engineer and filed with the City Clerk; and

WHEREAS, a survey and description of the land and interest to be condemned has been made by a competent engineer and filed with the City Clerk.

NOW THEREFORE, BE IT ORDAINED BY THE GOVERNING BODY OF THE CITY OF LEAWOOD, KANSAS:

Section 1. The City Attorney is hereby authorized and directed to institute eminent domain proceedings to acquire the property and interests described by survey filed with the City Clerk which property and interests have been determined by the Governing Body to be necessary for the purpose of construction of storm water improvements and re-improvements to the City of Leawood, Johnson County, Kansas. Specifically, the City Attorney is authorized and directed to institute eminent domain proceedings to acquire fee simple title to the following described property:

PERMANENT DRAINAGE EASEMENT

The West 10 feet of Lot 186 of Leawood Estates, a subdivision in the City of Leawood, Johnson County, Kansas and containing 1,150 square feet, more or less.

The West 10 feet of Lot 318 of Leawood Estates, a subdivision in the City of Leawood, Johnson County, Kansas and containing 1,071 square feet, more or less.

and to acquire a temporary easement to the following described property:

TEMPORARY CONSTRUCTION EASEMENT

The North 11 feet of the West 43 feet and the West 15 feet of Lot 186 in Leawood Estates, a subdivision in the City of Leawood, Johnson County, Kansas, and containing 3,623 square feet, more or less.

The West 15 feet of Lot 318 of Leawood Estates, a subdivision in the City of Leawood, Johnson County, Kansas and containing 1,611 square feet, more or less.

Section 2. This Ordinance shall take effect and be enforced from and after its passage, approval and publication as provided by law.

PASSED by the Council the 16th day of December, 1996.

APPROVED by the Mayor the 16th day of December, 1996.

Marcia Rinehart

Marcia Rinehart, Mayor

(S E A L)

ATTEST:

Martha Heizer

Martha Heizer
City Clerk

APPROVED AS TO FORM:

Richard S. Wetzler
City Attorney

ORD1637

Publication Fees: $15.27

The Legal Record
600 E. Santa Fe, Suite 4
Olathe, KS 66061-3700

CITY OF LEAWOOD
ATTN: MARTHA HEIZER
4800 TOWN CENTER DR
LEAWOOD, KS 66211

Proof of Publication

STATE OF KANSAS, JOHNSON COUNTY, SS;
Tammy Schwien, of lawful age, being first duly sworn, deposes and says that she is Legal Notices Administrator of The Legal Record which is a newspaper printed in the State of Kansas, published in and of general paid circulation on a weekly, monthly or yearly basis in Johnson County, Kansas, is not a trade, religious or fraternal publication, is published at least weekly fifty (50) times a year, has been so published *continuously and uninterrupted in said County and State for a* period of more than five (5) years prior to the first publication of the notice attached, and has been admitted at the post office as second class matter (now called periodicals class).
That a notice was published in all editions of the regular and entire issue for the following subject matter (also identified by the following case number, if any) for 1 consecutive week(s), as follows:

ORDINANCE NO. 1637--12/17/96

Tammy Schwien
Legal Notices Administrator

Subscribed and sworn to before me on this date:
December 18, 1996

Debra Dziadura
Notary Public

DEBRA DZIADURA
Notary Public - State of Kansas

My appointment expires: August 21, 1999.

$15.27

ORDINANCE NO. 1637

First published in The Legal Record, Tuesday, December 17, 1996.

ORDINANCE NO. 1637

AN ORDINANCE AUTHORIZING AND PROVIDING FOR ACQUISITION OF PRIVATE PROPERTY FOR THE USE OF THE CITY AND AUTHORIZING SURVEY AND DESCRIPTION OF THE LAND AND INTEREST TO BE CONDEMNED.

WHEREAS, the Governing Body of the City of Leawood did by resolution approve on December 16, 1996, and declare the necessity of appropriating certain private property for the use of the City; and

WHEREAS, the Governing Body has previously authorized a survey and description of the land and interest to be condemned to be made by some competent engineer and filed with the City Clerk; and

WHEREAS, a survey and description of the land and interest to be condemned has been made by a competent engineer and filed with the City Clerk.

NOW THEREFORE, BE IT ORDAINED BY THE GOVERNING BODY OF THE CITY OF LEAWOOD, KANSAS:

Section 1. The City Attorney is hereby authorized and directed to institute eminent domain proceedings to acquire the property and interests described by survey filed with the City Clerk which property and interests have been determined by the Governing Body to be necessary for the purpose of construction of storm water improvements and re-improvements to the City of Leawood, Johnson County, Kansas. Specifically, the City Attorney is authorized and directed to institute eminent domain proceedings to acquire fee simple title to the following described property:

PERMANENT DRAINAGE EASEMENT

The West 10 feet of Lot 186 of Leawood Estates, a subdivision in the City of Leawood, Johnson County, Kansas and containing 1,150 square feet, more or less.

The West 10 feet of Lot 318 of Leawood Estates, a subdivision in the City of Leawood, Johnson County, Kansas and containing 1,071 square feet, more or less.

and to acquire a temporary easement to the following described property:

TEMPORARY CONSTRUCTION EASEMENT

The North 11 feet of the West 43 feet and the West 15 feet of Lot 186 in Leawood Estates, a subdivision in the City of Leawood, Johnson County, Kansas, and containing 3,623 square feet, more or less.

The West 15 feet of Lot 318 of Leawood Estates, a subdivision in the City of Leawood, Johnson County, Kansas and containing 1,611 square feet, more or less.

Section 2. This Ordinance shall take effect and be enforced from and after its passage, approval and publication as provided by law.

PASSED by the Council the 16th day of December, 1996.

APPROVED by the Mayor the 16th day of December, 1996.

(S E A L)

Marcia Rinehart, Mayor

ATTEST:

Martha Heizer
City Clerk

APPROVED AS TO FORM:

Richard S. Wetzler
City Attorney

~~Repealed by:~~ ~~ORDINANCE NO~~ ~~Adopted:~~ ~~Effective:~~ repealed by Ord. 1641 1/6/97

ORDINANCE NO. 1636

AN ORDINANCE AMENDING SECTION 4-3 (SPECIAL USE PROVISIONS) OF THE "AMENDMENT OF THE LEAWOOD DEVELOPMENT ORDINANCE", PROVIDING SPORT COURTS AS A SPECIAL USE, AND REPEALING EXISTING SECTION.

Be it ordained by the Governing Body of the City of Leawood:

Section 1. "Amendment of Leawood Development Ordinance" Amended. That Section 4-3 of the supplement known as "Amendment of Leawood Development Ordinance" dated December 16, 1991, is hereby amended to read as follows:

4-3 SPECIAL USE PROVISIONS

4-3.1 Special Uses Designated

Any of the following uses may be located in any district by Special Use Permit of the Governing Body after notification of adjacent and abutting property owners, public hearing, and after recommendation of the Plan Commission, under such conditions as to operation, site development, signs, and time limit as may be deemed necessary in order that such use will not seriously injure the appropriate use of the neighboring property, and will conform to the general intent and purpose of this Ordinance and shall comply with the height and area regulations of the district in which they may be located unless a variance is specifically granted by the Board of Zoning Appeals.

1) Amusement parks, privately-owned baseball or athletic fields, race tracks;

2) Aviation fields or airports, under such restrictions as may be imposed to control noise, promote safety, and prevent undue danger to aircraft or to surrounding property;

3) Cemeteries, mausoleums, or crematories for the disposal of the dead;

4) Public and private schools;

5) Churches, synagogues and other places of worship;

6) Clubs, including those where alcoholic beverages are consumed;

7) Drive-in theaters;

8) Golf driving ranges, commercial or illuminated;

9) Gun clubs, skeet shoots, or target ranges;

10) Tennis courts and paved play areas, commonly referred to as "Sport Courts", hereinafter referred to as courts, may be approved as a special use. In order to prevent a negative influence on the neighborhood and creation of a potential nuisance use the following conditions shall be considered minimum requirements to be met.

a) Courts will only be considered as a special use if said court is accessory to the principal use it is intended to serve. Courts on separate lots will not be considered as stand alone structures.

b) Plans shall be submitted for approval and shall be based upon compliance with the following standards: 1) The need for screening to protect the privacy of adjoining properties, including noise and lighting, if proposed, and 2) surface runoff. These standards are to be considered minimums and other factors may be considerations for approval by the Plan Commission and/or Governing Body.

c) Courts shall not be constructed within a required front yard and shall be located a minimum of 10 feet from any rear or side lot line. Screen plantings of a height necessary to muffle noise and block lights may be required as a condition to the special use approval.

d) Fences for courts may be up to 12 feet in height and shall be of a green or black PVC coated chain link fabric. Said fences shall be located a minimum of 10 feet from any rear or interior side lot line.

e) Courts shall be designed so that the surface water will be carried to the street or storm drainage system on the owner's property, or by underground pipe to the public street or storm drainage system, or if across other ownership's, easements must be obtained. A statement along with a detailed drawing from a professional engineer, P.E., shall be submitted showing and stating that these drainage requirements have been or will be met.

f) All court lighting shall be subject to approval as a special use either in conjunction with the application for a sport court or separately as an addition at a later date. Existing courts requesting lighting must apply for same as a separate special use. A lighting plan shall be submitted which indicates the lumins (footcandles) at the property line and distance to the nearest structures. Footcandles shall not exceed 1.5 measured anywhere along the adjacent property lines. Illumination levels shall be measured with a photoelectric photometer having a spectral *response similar to that of the human eye, following the standard spectral* luminous efficiency curve adopted by the International Commission on Illumination. A lighted court may be required to have additional screening in order to mitigate the affect of lighting on any adjoining properties.

g) No court lighting shall be permitted between the hours of 10:00 p.m. and 7:00 a.m.

h) A landscape plan shall be submitted at time of application for special use indicating plant material, size, location and spacing proposed.

i) All courts shall require a building permit prior to grading and/or installation.

11) Hospitals; special care facilities for humans; not in include group homes as defined herein.

12) Campgrounds, picnic groves and fishing lakes, including minor and incidental concession facilities for patrons only;

13) Nursery sales office, building greenhouse, or area (wholesale or retail);

14) Nursing and convalescent homes; housing for the elderly; retirement centers and communities; not to include group homes as defined herein.

15) Outdoor poster panels or billboards; off-site promotional signs;

16) Veterinary clinics, dog kennels;

17) Radio, television and microwave towers;

18) Television and amateur radio antennae exceeding district height limitations.

19) Reservoirs, towers, filter beds, or water treatment plants;

20) Riding stables and tracks;

21) Wastewater treatment plant;

22) Motor hotels, motels, hotels, and convention centers;

23) Buildings, structures, and premises for public utility services, or public service corporations;

24) Temporary use of land or building for commercial or industrial purposes, provided that any building or structure constructed thereon which is not otherwise permitted in the District in which such land is situated shall be temporary, and any stored equipment or material shall be removed upon the date of expiration of the special use permit, which permit shall be valid for not more than 2 years but may be renewed after public hearing;

25) Assembly halls, community centers, philanthropic organizations;

26) Child care centers, family day care homes, preschools, nursery schools, Montessori schools, private kindergartens, day care homes and group day care homes; not to include group homes as defined herein.

27) Off-street parking lots or off-street parking structures of a temporary or permanent nature;

28) Group boarding home for minors or adults; not to include group homes as defined herein.

29) Private ambulance service;

30) Bed and breakfast;

31) Horse pasturing on lots of less than 3 acres in residential districts.

32) Temporary self contained health care suites located within an attached garage are intended to provide an "in home" physical care facility as a temporary alternative to a nursing home environment. It is not intended to provide long term care lodging for anyone that would be better served by a more permanent solution. Such permanent alternate solutions may require an alteration to the home, an addition onto the home, or off-site care by a health care institution. Such use is allowed as a special use provided the following conditions are met:

a) The suites are to be freestanding self contained units including independent heating and air conditioning units and plumbing systems.

b) Not more than 2 persons shall be housed in such suite provided said housing is necessitated by a physical impairment or health care need of one or both persons and said health care need is being met by occupant or occupants of the existing home. Said person(s) residing in such health care suite shall be either an occupant or a relative of the occupant of the home except in cases when an overnight health care provider is required.

c) A letter from a licensed doctor of medicine or osteopathy shall be submitted, along with the application for special use, verifying the need for such health care suite by the applicant or prospective resident of said suite.

d) Health care suites shall be limited to a maximum of 2 years duration. Such use may only be continued for 1 additional year and only after review and approval by the Plan Commission and City Council. Any amount of time beyond 3 years will require a permanent solution to be specified at the time the additional year is requested. Such solution shall be made a condition of approval if granted. At the end of the special use, the unit shall be removed and the garage restored to its former condition.

e) Any exterior modification of the home necessitated by the suite, such as the temporary removal of the garage door(s) to facilitate a private entry, windows, or heating or cooling units, shall be replaced with materials of an architectural likeness to the existing home. Samples of materials proposed to be used shall be submitted with the application for approval by the Plan Commission.

f) Additional written notification shall be required to the applicant's homes association and to all property owners within 200 feet of the applicant's property.

g) Because the installation of such health care suite temporarily removes the enclosed off-street parking spaces required by ordinance, the applicant shall submit an interim plan for dealing with off-street parking for the duration of the special use.

33) The Director of Planning may upon application by the proponent issue an Administrative Special Use Permit for the use of a specified parcel of land for such *temporary short-term uses as trade shows, street fairs, expositions, promotional* ventures, entertainment, seasonal sales, balloons, search lights, and tents, provided the following conditions are met:

a) The applicant shall submit in written form a complete description of the proposed use, including estimated accumulation of automobiles and persons, hours of operation, and other characteristics and effects on the neighborhood.

b) The applicant shall submit a site plan showing the location of any proposed structure.

c) The short-term special use shall not be operated longer than 10 consecutive days.

d) No more than 3 special event permits per calendar year shall be issued administratively at any location. Any additional permits may be granted by the Governing Body.

e) Upon the cessation of the short-term special use, all materials and equipment shall be promptly removed and the property restored to its normal condition.

f) Any structure used in conjunction with the special event shall be the subject of a valid building permit or tent permit.

g) The special event shall not cause undue traffic congestion or accident potential given anticipated attendance and the design of adjacent streets, intersections, and traffic controls.

h) The activity shall not cause the overcrowding of parking facilities given anticipated attendance and the possible reduction in the number of available spaces used by the event itself.

i) The special event shall not impair the usefulness, enjoyment or value of adjacent property due to the generation of excessive noise, smoke, odor, glare, litter or visual pollution.

j) If, after giving full consideration to the effect of the requested special use on the neighborhood and the community, the Director of Planning deems the special use reasonable, the special use permit for the short-term use may be approved. Conditions of operation, provision for surety bond, and other reasonable safeguards may be written into the special use permit. Such permit may be approved in any zoning district.

k) Any applicant denied an Administrative Special Use Permit shall be notified in writing of the reasons for the denial and of the opportunity to appeal the denial to the Governing Body.

Section 2. Repeal of Existing Section. That existing Section 4-3 of the "Amendment of the Leawood Development Ordinance" is hereby repealed. (Prior law: Ord. No. 1607)

Section 3. Take Effect. That this ordinance shall take effect and be in force from and after its publication in the official City newspaper.

Passed by the Council the 16th day of December, 1996.

Approved by the Mayor the 16th day of December, 1996.

Márcia Rinehart, Mayor

Attest:

Martha Heizer, City Clerk

Approved for form:

R.S. Wetzler

The Legal Record
600 E. Santa Fe, Suite 4
Olathe, KS 66061-3700

ORD1636

Publication Fees: $89.99

CITY OF LEAWOOD
ATTN: MARTHA HEIZER
4800 TOWN CENTER DR
LEAWOOD, KS 66211

Proof of Publication

STATE OF KANSAS, JOHNSON COUNTY, SS:
Tammy Schwien, of lawful age, being first duly sworn, deposes and says that she is Legal Notices Administrator of The Legal Record which is a newspaper printed in the State of Kansas, published in and of general paid circulation on a weekly, monthly or yearly basis in Johnson County, Kansas, is not a trade, religious or fraternal publication, is published at least weekly fifty (50) times a year, has been so published continuously and uninterrupted in said County and State for a period of more than five (5) years prior to the first publication of the notice attached, and has been admitted at the post office as second class matter (now called periodicals class).
That a notice was published in all editions of the regular and entire issue for the following subject matter (also identified by the following case number, if any) for 1 consecutive week(s), as follows:

ORDINANCE NO. 1636--12/24/96

Tammy Schwien
Legal Notices Administrator

Subscribed and sworn to before me on this date:
December 24, 1996

Debra Dziadura
Notary Public

DEBRA DZIADURA
Notary Public - State of Kansas

My appointment expires: August 21, 1999.

$89.99

ORDINANCE NO. 1636

First published in The Legal Record, Tuesday, December 24, 1996.

ORDINANCE NO. 1636

AN ORDINANCE AMENDING SECTION 4-3 (SPECIAL USE PROVISIONS) OF THE "AMENDMENT OF THE LEAWOOD DEVELOPMENT ORDINANCE", PROVIDING SPORT COURTS AS A SPECIAL USE, AND REPEALING EXISTING SECTION.

Be it ordained by the Governing Body of the City of Leawood:

Section 1 "Amendment of Leawood Development Ordinance" Amended. That Section 4-3 of the supplement known as "Amendment of Leawood Development Ordinance" dated December 16, 1991, is hereby amended to read as follows:

4-3 SPECIAL USE PROVISIONS

4-3.1 Special Uses Designated

Any of the following uses may be located in any district by Special Use Permit of the Governing Body after notification of adjacent and abutting property owners, public hearing, and after recommendation of the Plan Commission, under such conditions as to operation, site development, signs, and time limit as may be deemed necessary in order that such use will not seriously injure the appropriate use of the neighboring property, and will conform to the general intent and purpose of this Ordinance and shall comply with the height and area regulations of the district in which they may be located unless a variance is specifically granted by the Board of Zoning Appeals.

1) Amusement parks, privately-owned baseball or athletic fields, race tracks;

2) Aviation fields or airports, under such restrictions as may be imposed to control noise, promote safety, and prevent undue danger to aircraft or to surrounding property;

3) Cemeteries, mausoleums, or crematories for the disposal of the dead;

4) Public and private schools;

5) Churches, synagogues and other places of worship;

6) Clubs, including those where alcoholic beverages are consumed;

7) Drive-in theaters;

8) Golf driving ranges, commercial or illuminated;

9) Gun clubs, skeet shoots, or target ranges;

10) Tennis courts and paved play areas, commonly referred to as "Sport Courts", hereinafter referred to as courts, may be approved as a special use. In order to prevent a negative influence on the neighborhood and creation of a potential nuisance use the following conditions shall be considered minimum requirements to be met.

a) Courts will only be considered as a special use if said court is accessory to the principal use it is intended to serve. Courts on separate lots will not be considered as stand alone structures.

b) Plans shall be submitted for approval and shall be based upon compliance with the following standards: 1) The need for screening to protect the privacy of adjoining properties, including noise and lighting, if proposed, and 2) surface runoff. These standards are to be considered minimums and other factors may be considerations for approval by the Plan Commission and/or Governing Body.

c) Courts shall not be constructed within a required front yard and shall be located a minimum of 10 feet from any rear or side lot line. Screen plantings of a height necessary to muffle noise and block lights may be required as a condition to the special use approval.

d) Fences for courts may be up to 12 feet in height and shall be of a green or black PVC coated chain link fabric. Said fences shall be located a minimum of 10 feet from any rear or interior side lot line.

e) Courts shall be designed so that the surface water will be carried to the street or storm drainage system on the owner's property, or by underground pipe to the public street or storm drainage system, or if across other ownership's, easements must be obtained. A statement along with a detailed drawing from a professional engineer, P.E., shall be submitted showing and stating that these drainage requirements have been or will be met.

f) All court lighting shall be subject to approval as a special use either in conjunction with the application for a sport court or separately as an addition at a later date. Existing courts requesting lighting must apply for same as a separate special use. A lighting plan shall be submitted which indicates the lumins (footcandles) at the property line and distance to the nearest structures. Footcandles shall not exceed 1.5 measured anywhere along the adjacent property lines. Illumination levels shall be measured with a photoelectric photometer having a spectral response similar to that of the human eye, following the standard spectral luminous efficiency curve adopted by the International Commission on Illumination. A lighted court may be required to have additional screening in order to mitigate the affect of lighting on any adjoining properties.

g) No court lighting shall be permitted between the hours of 10:00 p.m. and 7:00 a.m.

h) A landscape plan shall be submitted at time of application for special use indicating plant material, size, location and spacing proposed.

i) All courts shall require a building permit prior to grading and/or installation.

11) Hospitals; special care facilities for humans; not in include group homes as defined herein.

12) Campgrounds, picnic groves and fishing lakes, including minor and incidental concession facilities for patrons only;

13) Nursery sales office, building greenhouse, or area (wholesale or retail);

14) Nursing and convalescent homes; housing for the elderly; retirement centers and communities; not to include group homes as defined herein.

15) Outdoor poster panels or billboards; off-site promotional signs;

16) Veterinary clinics, dog kennels;

17) Radio, television and microwave towers;

18) Television and amateur radio antennae exceeding district height limitations.

19) Reservoirs, towers, filter beds, or water treatment plants;

20) Riding stables and tracks;

21) Wastewater treatment plant;

22) Motor hotels, motels, hotels, and convention centers;

23) Buildings, structures, and premises for public utility services, or public service corporations;

24) Temporary use of land or building for commercial or industrial purposes, provided that any building or structure constructed thereon which is not otherwise permitted in the District in which such land is situated shall be temporary, and any stored equipment or material shall be removed upon the date of expiration of the special use permit, which permit shall be valid for not more than 2 years but may be renewed after public hearing;

25) Assembly halls, community centers, philanthropic organizations;

CONTINUED ON PAGE 21

CONTINUED FROM PAGE 20

26) Child care centers, family day care homes, preschools, nursery schools, Montessori schools, private kindergartens, day care homes and group day care homes; not to include group homes as defined herein.

27) Off-street parking lots or off-street parking structures of a temporary or permanent nature;

28) Group boarding home for minors or adults; not to include group homes as defined herein.

29) Private ambulance service;

30) Bed and breakfast;

31) Horse pasturing on lots of less than 3 acres in residential districts.

32) Temporary self contained health care suites located within an attached garage are intended to provide an "in home" physical care facility as a temporary alternative to a nursing home environment. It is not intended to provide long term care lodging for anyone that would be better served by a more permanent solution. Such permanent alternate solutions may require an alteration to the home, an addition onto the home, or off-site care by a health care institution. Such use is allowed as a special use provided the following conditions are met:

a) The suites are to be freestanding self contained units including independent heating and air conditioning units and plumbing systems.

b) Not more than 2 persons shall be housed in such suite provided said housing is necessitated by a physical impairment or health care need of one or both persons and said health care need is being met by occupant or occupants of the existing home. Said person(s) residing in such health care suite shall be either an occupant or a relative of the occupant of the home except in cases when an overnight health care provider is required.

c) A letter from a licensed doctor of medicine or osteopathy shall be submitted, along with the application for special use, verifying the need for such health care suite by the applicant or prospective resident of said suite.

d) Health care suites shall be limited to a maximum of 2 years duration. Such use may only be continued for 1 additional year and only after review and approval by the Plan Commission and City Council. Any amount of time beyond 3 years will require a permanent solution to be specified at the time the additional year is requested. Such solution shall be made a condition of approval if granted. At the end of the special use, the unit shall be removed and the garage restored to its former condition.

e) Any exterior modification of the home necessitated by the suite, such as the temporary removal of the garage door(s) to facilitate a private entry, windows, or heating or cooling units, shall be replaced with materials of an architectural likeness to the existing home. Samples of materials proposed to be used shall be submitted with the application for approval by the Plan Commission.

f) Additional written notification shall be required to the applicant's homes association and to all property owners within 200 feet of the applicant's property.

g) Because the installation of such health care suite temporarily removes the enclosed off-street parking spaces required by ordinance, the applicant shall submit an interim plan for dealing with off-street parking for the duration of the special use.

33) The Director of Planning may upon application by the proponent issue an Administrative Special Use Permit for the use of a specified parcel of land for such temporary short-term uses as trade shows, street fairs, expositions, promotional ventures, entertainment, seasonal sales, balloons, search lights, and tents, provided the following conditions are met:

a) The applicant shall submit in written form a complete description of the proposed use, including estimated accumulation of automobiles and persons, hours of operation, and other characteristics and effects on the neighborhood.

b) The applicant shall submit a site plan showing the location of any proposed structure.

c) The short-term special use shall not be operated longer than 10 consecutive days.

d) No more than 3 special event permits per calendar year shall be issued administratively at any location. Any additional permits may be granted by the Governing Body.

e) Upon the cessation of the short-term special use, all materials and equipment shall be promptly removed and the property restored to its normal condition.

f) Any structure used in conjunction with the special event shall be the subject of a valid building permit or tent permit.

g) The special event shall not cause undue traffic congestion or accident potential given anticipated attendance and the design of adjacent streets, intersections, and traffic controls.

h) The activity shall not cause the overcrowding of parking facilities given anticipated attendance and the possible reduction in the number of available spaces used by the event itself.

i) The special event shall not impair the usefulness, enjoyment or value of adjacent property due to the generation of excessive noise, smoke, odor, glare, litter or visual pollution.

j) If, after giving full consideration to the effect of the requested special use on the neighborhood and the community, the Director of Planning deems the special use reasonable, the special use permit for the short-term use may be approved. Conditions of operation, provision for surety bond, and other reasonable safeguards may be written into the special use permit.

k) Any applicant denied an Administrative Special Use Permit shall be notified in writing of the reasons for the denial and of the opportunity to appeal the denial to the Governing Body.

Section 2. Repeal of Existing Section. That existing Section 4-3 of the "Amendment of the Leawood Development Ordinance" is hereby repealed. (Prior law: Ord. No. 1607)

Section 3. Take Effect. That this ordinance shall take effect and be in force from and after its publication in the official City newspaper.

Passed by the Council the 16th day of December, 1996.

Approved by the Mayor the 16th day of December, 1996.

(SEAL)

Marcia Rinehart, Mayor

Attest:

Martha Heizer, City Clerk

Approved for form: /s/ R.S. Wetzler

R.S. Wetzler

ORDINANCE NO. 1635

AN ORDINANCE AMENDING SECTION 3-12 (SPECIAL DEVELOPMENT DISTRICT) OF THE LEAWOOD DEVELOPMENT ORDINANCE, AND REPEALING EXISTING SECTION.

Be it ordained by the Governing Body of the City of Leawood:

Section 1. Leawood Development Ordinance Amended. That Section 3-12 of the Leawood Development Ordinance is hereby amended to read as follows:

3-12 SD (SPECIAL DEVELOPMENT OVERLAY DISTRICT)

A) Statement of Objectives

1) Purpose: The City of Leawood recognizes that certain large land areas, because of their prominent location, thoroughfare exposure, parcel size, and their potential impact upon surrounding residential neighborhoods, require special consideration in their approval. Therefore, the SD, Special Development "Overlay" District has been created to identify and further establish such "special" areas of development in accordance with those areas indicated as SD, Special Development, on the Master Development Plan Map.

2) "Overlay" Defined: "Overlay" means a broad zoning category to which special land use categories (subdistricts) can be attached. For purposes of this section the SD district is the overlay zoning category to which the special land use categories (subdistricts) established in (4) below are to be attached.

3) Intent: The Special Development Overlay District is intended to:

a) Encourage a selected mix of high quality residential and non-residential development of particular land areas to expand the City's tax base and promote economic development.

b) Provide for appropriate design guidelines and development standards and conditions to protect the public health, safety and welfare.

c) Provide for necessary commercial facilities and employment centers conveniently located to housing particularly in the southern part of the City.

d) Encourage and require orderly development at a quality level equal to or exceeding that found in projects developed under planned zoning.

e) Permit certain deviations from the normal and established development techniques as provided herein when such deviation will result in a higher quality project.

f) Encourage a mix of selected residential, office and retail large scale developments.

g) Provide for innovative and imaginative site planning.

h) *Encourage conservation of natural resources.*

i) Encourage development of groupings of buildings or building sites that are planned as an integrated unit or clustered on property under unified control or ownership.

j) Provide for control of vehicular access.

k) Provide for control of architectural quality, landscaping and signage in order to soften any impact of such mixed use developments on nearby residential neighborhoods.

l) Minimize the effects of such development on the street system and other city provided services.

4) Sub-districts: For purposes of regulating the use and development of land within the Special Development Overlay District the following sub-districts have been established:

a) Sub-district (O): Office,

b) Sub-district (OH): Office - High Rise

c) Sub-district (NCR): Neighborhood Commercial Retail-Mixed Use

d) Sub-district (CR): Commercial-Retail

Application for one or more of the subdistricts as established above shall be requested at the time of rezoning to an SD district and preliminary development plan approval or a revised preliminary development plan approval. Any substantial change requested to an approved preliminary or final development plan or request for change to a different subdistrict shall be considered a revised preliminary plan and shall be subject to the same notice and public hearing requirements and protest provisions as the original zoning application request.

5) Substantial Change - A substantial change for purposes of this section shall include any proposed:

a) Increase in F.A.R. Floor Area Ratio

b) Increase in building square footage over 5%

c) Increase in building height

d) Decrease in landscape open space ratio

e) Building relocation

f) Increase in outparcel size or their relocation

B) District Uses:

In District SD, no building, structure, land or premises shall be used and no building or structure shall be hereafter erected, constructed, reconstructed, moved or altered except for one or more of the permitted uses, conditionally permitted uses or accessory uses set forth under the appropriate sub-district in Table 3-12A.

All such uses are further subject to conformance with the other provisions of this section.

C) Permitted Uses: With respect to the applicable subdistrict "Permitted Uses" are those uses listed as such in Table 3-12A.

D) Accessory Uses: Those uses specifically listed as "Accessory Uses" in Table 3-12A.

1) The total square footage devoted to all accessory uses within a given building or an integrated group of buildings shall not exceed 25% of the total square footage of the building or the grouping of buildings.

2) (Reserved).

E) Conditional Uses: Those uses specifically listed as "Conditional Use" in Table 3-12A.

1) Requests for a conditional use as listed under a specific sub-district shown in Table 3-12A may be made as part of an application for preliminary or final development plan approval or may be made independently at anytime after zoning and sub-district are in place provided notice and hearing requirements have been met pursuant to Section 6-3 of this ordinance. If the proposed use is not a conditional use in the applicable sub-district, or if the application or site plan is determined to be incomplete, the Planning Director shall notify the applicant within 10 working days of the date of filing. Thereafter, the applicant may resubmit the application and site plan and the Planning Director shall treat the application and site plan as a new matter. If it is again rejected by the Planning Director, the applicant may file an appeal of such determination to the Plan Commission within 10 days of receipt of the Planning Director's decision. Failure of the Planning Director to act within 10 working days as set forth above shall constitute a determination that the proposed use is not permitted in the applicable sub-district or that the application or site plan is incomplete. The application and site plan **shall not** be "deemed approved" by a failure to act within the time period specified.

2) The Plan Commission shall consider an application for a conditional use as part of its consideration of any preliminary or final development plan. If the proposed use conforms with the general standards and specific requirements of this section, the Plan Commission shall make the appropriate findings, and approve the application for conditional use permit and site plan. Any such approval shall be conditioned upon approval of same by the Governing Body. If the proposed use does not conform with one or more of the general standards or specific requirements of this section , the findings of the Plan Commission shall so state, and the Plan Commission may either disapprove the application for conditional use or approve with stipulations so as to make the conditional use conform to the requirements. If disapproved the applicant may appeal such decision to the Governing Body by filing a request for appeal to the city clerk within 10 days of the date of disapproval by the Plan Commission.

F) Findings of Fact

1) The Plan Commission shall make the following findings of fact prior to approval of any application for rezoning to a Special Development Overlay District (SD) classification, request for change from one subdistrict to another, preliminary or revised preliminary development plan approval, and/or application for a conditional use:

a) That the proposed development/conditional use is in harmony with the general purpose, goals, objectives and standards of the SD Statement of Objectives, Master Development Plan and other adopted planning policies.

b) That the proposed development/conditional use will not be detrimental to existing adjacent uses or to other permitted uses in the sub-district.

c) That the proposed development/conditional use will not generate volumes and/or types of vehicular traffic that will be hazardous to or conflict with the existing or anticipated traffic in the sub-district or surrounding area.

d) That the proposed development/conditional use meets the height, area and design standards for the sub-district.

e) That the site plan for the proposed development/conditional use promotes a project design which will be compatible with permitted uses in the sub-district.

f) That the proposed development/conditional use will not result in an over concentration of such uses within the sub-district or surrounding area.

2) If the Plan Commission is unable to make one or more of the findings listed in the previous subsection, the Plan Commission may either recommend denial of the site plan application and/or conditional use request or recommend the attachment of specific conditions to the application for site plan approval and/or conditional use approval to ameliorate the adverse impact of the proposed use on the sub-district. Such conditions may include, but are not necessarily limited to, the following:

a) A time limit on the duration of a conditional use within the sub-district.

b) Mitigation of adverse impacts by additional on-site buffer, landscaping, setback or open space requirements.

c) Mitigation of adverse impacts by restrictions on density, floor area ratio, building or structure height or percentage of lot coverage.

d) Mitigation of adverse impacts by the provision of off-site public facilities or improvements.

e) Limitations on hours of operation of the proposed use.

f) Limitations on noise, odor, vibration, glare or particulate matter emanating from the proposed use.

g) Limitations on the number of employees of the proposed use.

h) Limitations on the materials stored or used on the site.

i) Requirements for a larger minimum lot area.

G) Temporary Uses: See Section 4-3, (32), Administrative Special Use Permit, of this ordinance.

H) Height and Area Regulations: In District SD, the minimum lot size, minimum building setback from residentially zoned/planned property, minimum yard dimensions (front, side and rear), maximum building height, minimum landscaped open space ratio and maximum floor area ratio shall be as set forth in Table 3-12B, except as may be otherwise permitted by Section 3-12 (I) (4)of this ordinance.

I) Standards of Development

1) The preliminary development plan shall designate the applicable subdistrict for each lot or tract shown on the plan. The uses for each lot or tract shall be those designated for the applicable subdistrict in Table 3-12A. Except as may be otherwise provided in Section 3-12 (I) (4) of this ordinance, the height and area regulations shall be as set forth for the applicable subdistrict in Table 3-12B.

2) Performance Criteria:

a) General:

1) All operations shall be conducted within a fully enclosed building; however, normal outdoor loading and unloading of materials is permitted.

2) Loading docks and service areas are not permitted on a street side of a building unless completely landscaped and totally screened from view and approved as a part of the development plan by the Plan Commission. Any loading dock or loading area shall be completely screened from public streets by a solid wall, fence or evergreen plantings. Hours of loading and unloading may be limited, depending upon location and surrounding property use.

3) All utility distribution lines shall be installed underground within the project.

4) All storage of materials, products or equipment shall be within a fully enclosed building except as specifically authorized by the Plan Commission and Governing Body, i.e. drive up windows, or sales requiring outdoor areas such as auto dealers, etc.

5) Drive in restaurants where food is normally served to customers in parked vehicles or where food is consumed outside a building are not permitted unless specifically authorized by the Plan Commission.

6) No use shall create noise in excess of that of normal daily traffic measured at the lot lines of the premises. In no case shall the noise level exceed 60 dB at repeated intervals or for a sustained length of time, measured at any point along the property line.

7) Architectural quality of the buildings must be equal on all sides of the structure such that all sides of the building are "finished".

8) No wholesale sales shall be conducted.

9) A proposed development shall contain not less than 10 acres and shall be developed by a single entity. Lots may be sold to separate users but the sale of lots must be accompanied by restrictive covenants assuring a high level of architecture, site improvements and their continued maintenance. Covenants shall include at a minimum, property owners' association, maintenance of individual sites and common areas, standards for finishing of buildings, and design standards for signs. Such standards shall be submitted with the preliminary site plan.

10) All trash must be stored inside of a structure that is compatible with the building design. The structure must be of materials that are comparable to the materials used in the buildings in the development. The design of the trash enclosures must be shown on the preliminary and final site plan.

11) All public sidewalks, where required or otherwise provided, shall be a minimum of 5 feet wide. Sidewalks at store fronts shall be a minimum of 10 feet wide.

12) No use shall create dust, dirt, particulate matter, smoke, noxious odor, radiation, noxious gases, heat, unscreened glare, vibration or concussion which is perceptible without special instruments at the lot lines of the premises.

13) All lights, other than publicly installed street lights, shall be located and installed to reflect the light away from abutting properties in an area zoned for or developed with residential structures.

b) 135th Street Corridor Additional Performance Standards/Criteria.

3) Additional Studies: The Plan Commission or Governing Body may, at any time in the process of approving preliminary development plans, revised preliminary development plans or conditional uses within district SD and its related subdistricts, require additional studies to be completed. Such studies may include but are not limited to the following:

a) Traffic Impact (Existing and Projected)

b) Noise

c) Lighting

d) Economic Impact

4) The Plan Commission or Governing Body may, in the process of approving preliminary or final development plans, approve deviations from the minimum standards set forth in Table 3-12B or other applicable provisions, provided that any deviation so approved shall be in keeping with accepted land planning principles and must be clearly set out in the minutes as well as on exhibits in the record, in accordance with the following limitations:

a) Deviations from minimum lot areas may be granted where buildings are clustered so long as the overall density of the development does not exceed applicable floor area ratios for the entire parcel. Any common open space resulting from the variance of such density standard shall be set aside for the use and benefit of the occupants of such development.

b) Floor area ratio FAR bonuses may be awarded only for developments in sub-districts (O) and (OH) as follows:

1) projects with landscaped open space ratios significantly in excess of the required minimum -- up to 10% increase in the applicable maximum FAR;

2) projects with a landscaping plan demonstrating quantities and qualities of landscaping significantly superior to that of other developments in the City -- up to 10% increase in the applicable maximum FAR;

3) projects with architecturally significant fountains, statuary and other decorative features -- up to 10% increase in the applicable maximum FAR;

4) projects with pedestrian plazas and linkages, street furniture and other features designed to encourage pedestrian circulation and usage-- up to 10% increase in the applicable maximum FAR;

5) projects containing lakes or ponds -- up to 10% increase in the applicable maximum FAR; and

6) projects incorporating and demonstrating transportation management systems i.e., ride sharing, van pooling, flextime or other measures designed to significantly decrease peak hour vehicular trip generation -- up to 10% increase in the applicable maximum FAR.

7) projects incorporating parking structures resulting in significant increases in landscaped open space - up to 20% increase in the applicable maximum FAR.

The determination of the satisfaction of the bonus criteria, and the amount of any bonus to be awarded, shall be at the sole discretion of the Governing Body. The total FAR, including all bonuses, shall not exceed an FAR of .35 for sub-district (O) or.45 for subdistrict (OH). All approved bonus increases are to be added together before being applied to the base FAR of the subdistrict for calculation.

J) Open Space: (See Section M.)

K) Building Coverage: (See Table 3-12B)

L) Parking and Loading Requirements:

1) Except as otherwise provided herein, the provisions of Section 4-4, Off-Street Parking, Storage, Loading Regulations and Parking Lot Design Standards, shall apply to all developments in district SD.

2) Where specific parking requirements are established for land uses in Section 4-4, those standards shall apply in this district. For buildings or portions of buildings for uses which are not listed in Section 4-4, the following general parking ratios shall be applied:

   Subdistrict (O), (OH), (CR) and (NCR) -- 5 spaces for each 1,000 square feet of gross floor area.

3) Shared Parking.

   a) In mixed use buildings or developments where several buildings containing different uses share common parking areas, the applicant may be permitted to reduce the total number of parking spaces otherwise required by utilizing shared parking. For purposes of this subsection, shared parking is defined as parking spaces that can be used to serve 2 or more individual land uses without conflict or encroachment. Shared parking may result from either variations in the peak accumulation of parked vehicles due to time differences in the activity patterns of adjacent or nearby land uses (by hour, by day or by season) or as a result of relationships among land use activities that result in people being attracted to 2 or more land uses in a given area or development using a single vehicle trip. A shared parking study may be required by the Plan commission, Governing Body or Staff in order to determine the feasibility of its application in the proposed development. When required it shall be prepared by a professional traffic engineer acceptable to the City.

   b) Shared parking studies submitted pursuant to this subsection shall, at a minimum, include the following information:

      1) project analysis -- involving the sizing and functional relationship of project land uses based upon market research, site constraints and other considerations;

      2) peak parking factor adjustments -- involving the selection of appropriate peak parking accumulation factors for each land use, and the adjustment of each factor to reflect site-specific factors such as transit use, ride sharing, flextime and captive markets;

      3) accumulation analysis -- involving the hourly, daily and seasonal estimation of parking accumulation for each component land use;

      4) shared parking estimation -- involving the hourly, daily and seasonal estimation of parking accumulation for the entire project.

   c) Where a reduction in the number of required parking spaces for a project occurs as a result of a shared parking study, approval of the reduced number of parking spaces shall be conditioned upon a land use mix within

the parameters of the uses described in the shared parking study. Changes in uses within the project may require compliance with the parking requirements otherwise applicable under this section or a revision of the shared parking study establishing different parking requirements.

4) Except as may be otherwise permitted by Section 3-12(l), paved parking areas shall be set back a minimum of 30 feet from any street right-of-way or perimeter property line.

M) Landscaping and Screening

1) In addition to any other requirement for landscaping and screening imposed pursuant to Section 4-6 of this ordinance, an application for final development plan shall be accompanied by a landscaping and screening plan complying with the provisions of this section.

2) Except to the extent that the requirements of this section are more stringent, the provisions of Section 4-6 shall also apply.

3) All landscaping plans shall be prepared and sealed by a Kansas or Missouri registered landscape architect and shall include the following information:

a) North point and scale.

b) Topographic information and final grading adequate to identify and properly specify planting for areas needing slope protection.

c) The location and size of all structures and parking areas.

d) The location, size and type of all above-ground and underground utilities and structures with proper notation, where appropriate, as to any safety hazards to avoid during installation of landscaping.

e) The location, size, type and quantity of all proposed landscaping materials, along with common and botanical names of all plant species. The size, grading and condition shall be specified according to American Association of Nurserymen standards.

f) The location, size and common name of all existing plant materials to be retained on the site.

g) Mature sizes of plant materials shall be drawn to scale and called out on the plan by a common name or appropriate key.

h) Location of hose connections and other watering sources.

i) The location of all trees, 12 inch caliper or larger, measured at 4-1/2 feet above ground level, that are proposed for removal.

j) All screening required by this section.

4) Plantings within landscaped open space areas, trees and shrubs shall be provided in accordance with the following minimum requirements:

a) 1 tree shall be provided for each 30 feet of public or private street frontage within the landscaped setback abutting said street frontage. Such trees may be clustered or arranged within the setback if approved as part of the landscape plan In addition to the street trees, 1 shrub shall be provided for each 5 feet of public or private street frontage, or portion thereof, within the landscaped setback abutting such frontage. Such shrubs may be clustered or arranged within the setback.

b) A landscaped setback/buffer area is required along all property lines on the periphery of the area covered by the plan, other than street frontages. Notwithstanding any other provisions relating to yard requirements, such landscaped setback/buffer area shall be at least 30 feet. Within such landscaped setback/buffer area, 1 tree shall be provided for every 20 lineal feet along the property line, and one shrub shall be provided for each 10 feet along the property line. Such trees and shrubs may be clustered or arranged within the setback.

c) In addition to the trees required based upon street frontage, additional trees shall be required at a ratio of 1 tree for every 3,000 square feet of landscaped open space.

d) Existing trees saved on the site during construction may be credited toward the minimum number of trees required provided that such trees are a minimum 4 inch caliper as measured 4 1/2 feet above ground for medium and large deciduous species or 3 feet in height for ornamental and evergreen species. All existing plant material saved shall be healthy and free of mechanical injury.

e) All landscape areas shall be irrigated.

5) Parking areas shall be screened and landscaped in accordance with the following minimum requirements.

a) Parking Area Screening.

1) The perimeter area of all on-site, open parking areas shall be screened from the view of adjacent properties and streets at the time of planting to a minimum height of 3 feet by the use of berms, walls or plantings.

2) Parking lot screening shall be designed so as to avoid obstructing visibility at intersections from both vehicles in the parking lot and on adjacent streets. A clear sight distance triangle of 25 feet from an intersection shall be established to ensure visibility and safety.

3) 100% of the affected street frontage or property boundary, excluding intersecting driveways, must have the required screening.

4) Structures such as decorative walls or fences may be approved if:

a) The structure avoids a blank and monotonous appearance by such means as architectural articulation and/or the planting of vines, shrubs or trees; or

b) The total use of berms or plantings is not physically feasible; or

c) The structures complement the use of berms or plantings.

5) The reference elevation for the base of the required screen shall be the surface of the parking area that is to be screened.

6) The following maximum grades shall be permitted in the parking lot screen area:

a) Sodded Grass berms shall be 3 feet horizontal for each 1 foot vertical rise; and

b) Planting beds shall be 2 feet horizontal for each 1 foot vertical rise.

7) Where a parking lot is located adjacent to or come in direct contact with any landscaped setback/buffer area required pursuant to subsection 4 above, the landscaped setback/buffer area requirement shall apply and the above parking area screening requirements shall be waived.

b) Parking Area Landscaping:

1) Not less than 6% of the interior of a parking area shall be landscaped. The interior of a parking area shall be calculated by multiplying the number of parking spaces by 280 square feet. Plantings required along the perimeter of the parking area for screening shall not be considered as part of the interior landscaping requirement.

2) Landscaping and planting areas shall be reasonably dispersed throughout the parking area.

3) The interior dimensions of any planting area or planting median shall be sufficient to protect the landscaping materials planted therein and to ensure proper growth; in no event shall any such area be less than 60 square feet in area or 8 feet in width. Each area shall be protected by Portland cement concrete vertical curbs or similar structures.

4) The primary landscaping materials used in parking lots shall be trees which provide shade or are capable of providing shade at maturity. Shrubbery, hedges and other planting materials may be used to complement the tree landscaping, but shall not be the sole means of landscaping. Effective use of earth berms and existing topography is also encouraged as a component of the landscape plan.

5) In those instances where plant materials exist on a parking area site prior to its development, such materials may be used if approved as meeting the requirements in subsection 6 below.

6) Minimum planting requirements shall be as follows:

   a) Medium and large deciduous shade trees – 2 1/2 inch caliper as measured 6 inches above ground.

   b) Small deciduous or ornamental trees -- 8 feet in height,

   c) Conifers – 6 to 8 feet in height.

   d) Upright evergreen trees -- 8 feet in height,

   e) Shrubs shall be a minimum container size of 5 gallons with a minimum mature height of 4 to 6 feet in height. The size of spreader and globe tree form shall be determined by the applicant.

   f) Ground cover plants, whether in the form of crowns, plugs or containers, shall be planted in a number as appropriate by species to provide 50% surface coverage after two growing seasons.

   g) Seeding for turf and native grass shall be as appropriate to provide complete coverage within the first growing season.

   h) Sod shall be used where required or where necessary to provide coverage and soil stabilization.

   i) Landscaped open space shall consist of a minimum of 60% living materials; the remaining area may consist of non-living materials such as bark, wood chips, decorative rock or stone or other similar materials.

7) All required landscaping materials, both living and non-living, shall be in place prior to the time of issuance of a final Certificate of Occupancy, weather permitting. In periods of adverse weather conditions, a temporary Certificate of Occupancy may be issued, subject to all landscaping be installed prior to the final Certificate of Occupancy being issued.

8) All landscaping shall be maintained in accordance with the following requirements:

   a) All landscaping materials depicted on landscaping plans approved by the City shall be considered to be elements of the project in the same manner as parking, building materials and other details. The developer, its successor and/or subsequent owners and their agents shall be responsible for maintenance of landscaping on the property on a continuing basis for the life of the development. Plant materials which exhibit evidence of insect

pests, disease or damage shall be appropriately treated, and dead plants promptly removed and replaced within the next planting season after installation. All landscaping will be subject to periodic inspection by the City. Should landscaping not be installed, maintained and replaced as needed to comply with the approved plan, the owner and its agent or agents shall be considered to be in violation of the terms of the Certificate of Occupancy. The Director of Planning and Development is empowered to enforce the terms of this section.

b) (Reserved)

9) Landscaping and screening plans shall include a detailed drawing of enclosure and screening methods as provided hereinafter:

a) Trash enclosures shall be screened from public view on at least 3 sides with a 6 foot solid fence constructed of cedar, redwood, masonry or other compatible building material, and shall be appropriately landscaped.

b) Exterior ground-mounted or building-mounted equipment including, but not limited to, mechanical equipment, utilities and meter banks, shall be screened from public view with landscaping or with an architectural treatment compatible with the building structure.

c) All rooftop equipment shall be screened from the public view with an architectural treatment which is compatible with the building architecture.

d) For purposes of this subsection, the phrase screened from public view," means not visible at eye level from an adjoining property line or any street right-of-way.

N) Signage:

1) Sign criteria for each development or each phase of the development shall be submitted for review by the Staff prior to filing an application for final development plan approval. The sign criteria shall address all aspects of signage within the development, or phase of the development, including numbers, types, sizes, shapes and colors of signs to be permitted in the development. The Staff shall make its recommendation concerning the sign criteria to the Plan Commission at the time of consideration of the final development plan. Once the sign criteria has been approved as part of the final development plan, the requirements of the sign criteria shall be enforced by the City in the same manner that it enforces any other sign regulation contained in this ordinance.

2) As a guide for preparing sign criteria for SD developments, the developer should generally refer to sign requirements for the most analogous zoning district in determining the number, types and sizes of signs to be permitted in any sub-

district. For purposes of this subsection, the "most analogous zoning district" for each SD sub-district shall be as follows:

a) Sub-district (O), (OH) -- District CP-O.

b) Sub-districts (NCR) -- District CP-1.

c) Sub-districts (CR) --District CP-2.

3) Except as altered above, the provisions of Section 4-5 of this ordinance shall apply to all SD developments.

O) Procedures for Rezoning to SD and Approval of Development Plans

1) Except to the extent modified by Section 3-12, rezoning to the SD district shall follow the same procedure of other zoning reclassifications as set forth in Article 6 of this ordinance.

2) Preliminary, revised preliminary and final development plans shall be considered and acted upon as set forth in Section 6-2 of this ordinance.

3) Applications for conditional uses, and site plans in support thereof, may be considered as part of the Plan Commission's consideration of any preliminary, revised preliminary or final development plan. Where publication notice and notice to surrounding property owners pursuant to Section 6-3 of this ordinance is required for consideration of any such plan, the publication notice and notice to surrounding property owners shall include a statement that specified conditionally permitted use(s) are being requested. Applications for conditional uses to be considered separately shall also require a public hearing, pursuant to Section 6-3 of this ordinance Any conditional use approved for a lot or tract covered by a plan shall be so designated on the plan.

P) Planned Zoning Procedures: Except to the extent modified by this Section, the provisions of Section 6-2 pertaining to planned zoning districts shall be applicable to district SD.

Q) 135th Street Corridor Supplemental Provisions (Reserved for future addition/135th Street Study)

1) Purpose Statement (Reserved)

2) Design Guidelines (Reserved)

R) FAR (Floor Area Ratio) Calculations (See Definition and Corresponding Diagram)

S) Definitions: The following definitions are to be used in conjunction with Article 8 of this ordinance. If overlapping of definitions occur the ones specifically included below shall govern in the SD District.

Animal Care, Limited means a use providing animal care, boarding and veterinary services for household pets, with no outside animal runs. See also "Kennel".

Assisted Living means multi-family dwelling units used or designed to be used by older persons, persons with disabilities or other persons needing or desiring assistance with day-to-day living matters, but not including group homes, group housing, hospitals or

convalescent care facilities. Typical uses include retirement communities in which housekeeping services, common dining facilities and recreational and social activities are offered to residents.

Communication Tower means commercial AM/FM radio, television, microwave and cellular telephone transmission towers and accessory equipment and buildings.

Convalescent Care means an establishment providing bed care and inpatient services for persons needing regular medical attention, but excluding facilities for the care and treatment of mental illness, alcoholism, narcotics addiction, emergency medical services or communicable disease. Typical uses include nursing homes.

Cultural Service *means a facility providing cultural and educational services to the public.* Typical uses include museums, art museums, observatories, planetariums, botanical gardens, arboretums, zoos and aquariums.

Day Care, Commercial means a day care establishment that provides care, protection and supervision for 11 or more individuals at any one time, including those under the supervision or custody of the day care provider.

Day Care, General means a day care center that provides care, protection and supervision for seven to ten individuals at any one time, including those under the supervision or custody of the day care provider.

Day Care, Limited means a day care center that provides care, protection and supervision for six or fewer individuals at any one time, including those under the supervision or custody of the day care provider.

Day Care means an establishment that provides care, protection and supervision for individuals on a regular basis away from their primary residence for less than 24 hours per day. The term includes kindergartens, nursery schools and other similar programs regardless of auspices.

Floor Area Ratio (FAR) means the total square foot of floor area on a zoning lot, divided by the total square feet of lot area of that zoning lot. *Floor area ratio (FAR) is used to impose limits on commercial development intensity. An FAR of 1 allows one square foot of building for each square foot of land use, while an FAR of 4 allows four square feet of building for each square foot of land area. A commercial zone with FAR requirements may also have bulk requirements, such as a 50-percent limit on lot coverage, which would mean that a building in a zone with an FAR of 1 may be a two-story building on half the lot.*-**The Practice of Local Government Planning**.

Floor area ratio is the total floor area on a zoning lot, divided by the lot area of that zoning lot.

$$\text{FAR} = \frac{\text{total floor area}}{\text{total lot area}}$$

1 story building
100% cover, FAR = 1.0

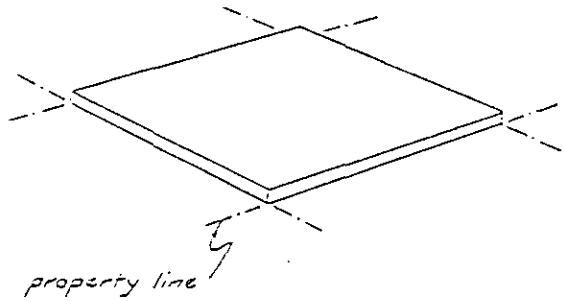

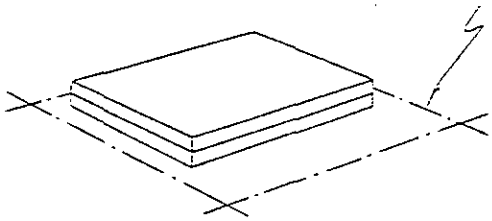

2 story building
50% cover, FAR = 1.0

5 story building
20% cover, FAR = 1.0

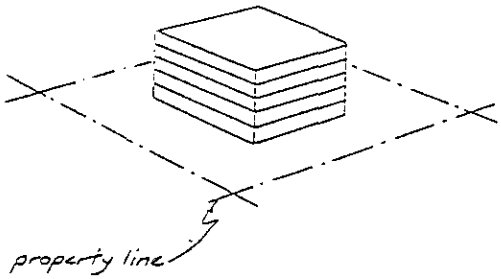

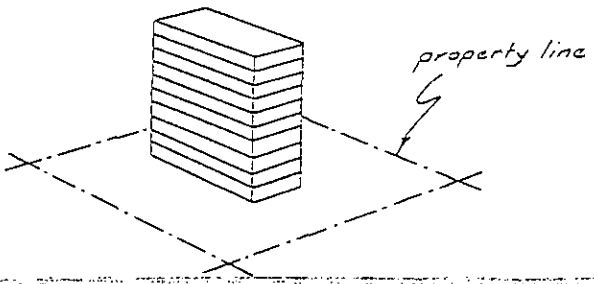

10 story building
10% cover, FAR = 1.0

Funeral Home means an establishment engaged in preparing the human deceased for burial or cremation and arranging and managing funerals.

Golf Course means a facility providing private or public golf recreation services and support facilities. This definition shall exclude miniature golf courses and golf driving ranges except those that are clearly accessory uses. See "Recreation and Entertainment, Outdoor."

Government Service means buildings or facilities owned or operated by a government entity and providing services for the public, excluding utilities and park and recreation services. Typical uses include administrative offices of government agencies and utility billing offices.

Health Club means a facility where members or nonmembers use equipment or space for the purpose of physical exercise.

Heliport or Helipad means an area, either on the ground or on a building, used as a landing pad for helicopters to pick up or discharge passengers or cargo.

Kennel means boarding, breeding or training facilities for three or more dogs that are more than six months of age, including dogs owned by the occupants of the property. See also "Animal Care, Limited".

Library means a publicly-operated establishment housing a collection of books, magazines, audio and video tapes and other material for borrowing and use by the public.

Medical Service means an establishment providing therapeutic, preventive, or corrective personal treatment services on an outpatient basis by physicians, dentists, and other practitioners of the medical or healing arts, and the provision of medical testing and analysis services. Typical uses include clinics and offices for doctors of medicine, dentists, chiropractors, osteopaths, optometrists, blood banks and medical laboratories.

Office, General means an establishment providing executive, management, administrative or professional services, but not medical or dental services or the sale of merchandise, except as incidental to a permitted use. Typical uses include real estate, insurance, property management, investment, employment, travel, advertising, law, architecture, design, engineering, accounting and similar offices.

Parks and Recreation means a park, playground or community facility, owned by or under the control of a public agency or homeowners' association, that provides opportunities for active or passive recreational activities.

Post Office means a facility used for the collection, sorting and distribution of U.S. mail among several zip code areas and having limited retail services for the public, such as the sale of stamps, postcards and postal insurance.

Printing and Publication means the production of books, magazines, newspapers and other printed matter, and record pressing and publishing, engraving and photoengraving, but excluding businesses involved solely in retail photocopying, reproduction, photo developing or blueprinting services. See "Retail Sales and Services."

Recreation and Entertainment, Indoor means an establishment offering recreation, entertainment or games of skill to the public for a fee or charge and that is wholly enclosed in a building. Typical uses include bowling alleys, indoor theatres, bingo parlors, pool halls, billiard parlors and video game arcades.

Recreation and Entertainment, Outdoor means an establishment offering recreation, entertainment or games of skill to the public for a fee or charge, wherein any portion of the activity takes place in the open. Typical uses include archery ranges, batting cages, golf driving ranges, drive-in theaters and miniature golf courses.

Religious Assembly means a site used by a religious group primarily or exclusively for religious worship and related religious services, including a place of worship, retreat site or religious camp.

Repair Service means an establishment primarily engaged in the provision of repair services to individuals and households but excluding "Vehicle Repair" services. Typical uses include appliance repair shops.

Research Services means an establishment engaged in conducting basic and applied research, including production of prototype products when limited to the minimum scale necessary for full investigation of the merits of a product, excluding production o products used primarily or customarily for sale or for use in non-prototype production operations.

Retail Sales and Service means an establishment engaged in the sale or rental of goods and services, excluding uses more specifically defined.

Safety Service means a facility for conduct of public safety and emergency services, including fire and police protection services and emergency medical and ambulance services.

School Elementary, Middle or High means the use of a site for instructional purposes on an elementary or secondary level.

Studio, Television or Film means an establishment primarily engaged in the provision of recording or broadcasting services accomplished through the use of electronic mechanisms.

Vocational School means a use providing education or training in business, commercial trades, language, arts or other similar activity or occupational pursuit, and not otherwise defined as a "College or University" or "School."

Table 3-12A

TABLE OF USES

(Uses)	Special Development Sub-Districts		
	(O), (OH)	(CR)	(NCR)
Residential			
Assisted Living	C	C	C
Medium Density Single Family Residential	C	C	C
Multi-family	C	C	C
Public/Quasi-Public and Commercial			
Adult Entertainment	X	X	X
Animal Care, Limited	X	P	P
Bank or Financial Institution	C	P	P
Bed and Breakfast	C	C	C
Club, Private	C	C	C
College or University	C	C	C
Communication Tower	C	C	X
Convalescent Care	C	P	P
Cultural Service	C	C	C
Delivery Services (Not to include freight transfer, i.e. semi-tractor trailers)	C	P	P
Day Care, Limited (1-6)	A	A	A
Day Care, General (7-10)	C	P	P
Day Care, Commercial (11+)	C	C	C
Funeral Home	C	P	C
Golf Course	C	C	C
Government Service	P	P	P
Health Club	C	P	P
Heliport or Helipad	C	C	X
Hospital	C	C	X
Hotel/Motel	C	C	X
Kennel, Indoor (no outside exercise area or dog run)	X	C	X
Library	P	P	P
Medical Service	C	P	P
Office, General	P	P	P
Parks and Recreation	C	C	C
Personal Services	P	P	P
Post Office	C	P	C
Printing and Publishing	C	P	C
Recreation and Entertainment, Indoor (excludes uses in retail Sales and Services)	C	C	C
Recreation and Entertainment, Outdoor	C	C	X
Religious Assembly	C	C	C
Repair Service	X	P	C
Research Service	X	C	C
Retail Sales and Service			
*Appliance Sales/Service	X	P	P
*Art Gallery/Commercial	X	P	P
*Auto Parts supply	X	C	C
*Auto Service Centers/TBA (Tire, Battery & Accessories)	X	C	C
*Bakery(Retail only)	X	P	P
*Bar/Tavern	X	C	C
*Barber/Beauty Shop	A	P	P
*Boat Sales/Service	X	C	C
*Bicycle Shop	X	P	P
*Book/Stationary/Gift Shop	X	P	P

P = Permitted Use **C= Conditional Use** **A= Accessory Use** **X= Prohibited Use**

Table 3-12A Continued

TABLE OF USES

(Uses)	Special Development Sub-Districts		
	(O), (OH)	(CR)	(NCR)
Retail Sales and Service continued...			
*Bowling Alley/Center	X	C	C
*Business Services	X	P	P
*Building Materials Sales, Indoor/Totally Enclosed	X	C	X
*Camera Shop/Photographic Studio	X	P	P
*Catalog Center	X	P	P
*Car Wash, Full Service/Totally Enclosed	X	C	X
*Clothing/Accessory Store	X	P	P
*Computer Sales and Service	X	P	P
*Construction Sales and Service, Indoor/Totally Enclosed	X	C	X
*Convenience Store	X	C	C
*Department Store	X	P	C
*Dry Cleaner	X	P	P
*Drug Store/Health Care Supply	X	P	P
*Electronic Sales and Service	X	P	P
*Flower Shop/Garden Store	X	P	P
*Food Stores, Specialty	X	P	P
*Furniture/Home Furnishings	X	P	C
*Gas Station	X	C	C
*Grocery Store/Supermarket	X	P	C
*Hardware Store	X	P	P
*Home Accessory Shop/Boutique	X	P	P
*Home Remodeling and Light construction Supply/Sales	X	C	C
*Jewelry Store	X	P	P
*Movie Rental/Sales	X	P	P
*Movie Theater/Indoor	X	P	X
*Music Store	X	P	P
*Office Supply	X	P	P
*Packaged Liquor Sales	X	C	X
*Pet Shop	X	P	P
*Restaurant, Fast Food with Drive Through	X	C	X
*Restaurant, Fast Food, Dine In/Carry Out	X	C	P
*Restaurant, General	X	P	P
*Sewing/Fabric Store	X	P	P
*Shoe Store/Repair	X	P	P
*Shopping Center	X	P	C
*Sporting Goods Sales/Rental	X	P	P
*Tailoring/Alterations	X	P	P
*Toy/Hobby Shop	X	P	P
*Vehicle and Equipment Sales and Service	X	C	X
**BIG BOX RETAIL (OVER 60,000 SQ.FT.)*	*X*	*C*	*X*
Public/Quasi-Public and Commercial continued...			
Safety Services	C	P	C
School, Public and Private, Elementary, Middle or High	C	C	C
Studio, Television or Film	C	P	P
Transitional Living Facility	C	P	C
Veterinarian	X	P	P
Vocational School	C	P	C

P = Permitted Use **C = Conditional Use** **A = Accessory Use** **X = Prohibited Use**

Table 3-12B

TABLE OF REGULATIONS

Applicable Regulations	Special Development Sub-Districts			
	(O)	(CR)	(NCR)	(OH)
Minimum lot size	10 acres minimum are required for SD district establishment.	10 acres minimum are required for SD district establishment	10 acres minimum are required for SD district establishment	10 acres minimum are required for SD district establishment
Building setback from residential master planned or zoned property	75 ft. or applicable yard requirement whichever is greater	75 ft. or applicable yard requirement whichever is greater	125 ft. or applicable yard requirement whichever is greater	Same as (O)
Maximum height	6 Stories	50 ft.	40 ft.	none
Maximum floor area ratio without bonuses (with bonuses)	.25 (.35)	.25	.20	.35 (.45)
Minimum landscaped open space ratio	.25	.25	.35	.25
Minimum front yard	40 ft. or height of building whichever is greater up to maximum of 150 ft.	40 ft. or height of building whichever is greater	40 ft.	Same as (O)
Minimum side yard	40 ft. plus 1 ft. for each 1 ft. of building height in excess of 75 ft., up to maximum of 150 ft.	40 ft.	40 ft.	Same as (O)
Minimum rear yard	40 ft. plus 1 ft. for each 1 ft. of building height in excess of 75 ft., up to maximum of 150 ft.	40 ft.	40 ft.	Same as (O)

Section 2. Repeal of Existing Section. That existing Section 3-12 of the Leawood Development Ordinance is hereby repealed.

Section 3. Take Effect. That this ordinance shall take effect and be in force from and after its publication in the official City newspaper.

Passed by the Council the 16th day of December, 1996.

Approved by the Mayor the 16th day of December, 1996.

(S E A L)

Marcia Rinehart

Marcia Rinehart, Mayor

ATTEST:

Martha Heizer

Martha Heizer, City Clerk

APPROVED FOR FORM:

R.S. Wetzler, City Attorney

ORD1635

Publication Fees: $350.69

The Legal Record
600 E. Santa Fe, Suite 4
Olathe, KS 66061-3700

CITY OF LEAWOOD
ATTN: MARTHA HEIZER
4800 TOWN CENTER DR
LEAWOOD, KS 66211

Proof of Publication

STATE OF KANSAS, JOHNSON COUNTY, SS;
Tammy Schwien, of lawful age, being first duly sworn, deposes and says that she is Legal Notices Administrator of The Legal Record which is a newspaper printed in the State of Kansas, published in and of general paid circulation on a weekly, monthly or yearly basis in Johnson County, Kansas, is not a trade, religious or fraternal publication, is published at least weekly fifty (50) times a year, has been so published continuously and uninterrupted in said County and State for a period of more than five (5) years prior to the first publication of the notice attached, and has been admitted at the post office as second class matter (now called periodicals class).
That a notice was published in all editions of the regular and entire issue for the following subject matter (also identified by the following case number, if any) for 1 consecutive week(s), as follows:

ORDINANCE NO. 1635--12/24/96

Tammy Schwien
Legal Notices Administrator

Subscribed and sworn to before me on this date:
December 24, 1996

Debra Dziadura
Notary Public

DEBRA DZIADURA
Notary Public - State of Kansas

My appointment expires: August 21, 1999.

$350.69

ORDINANCE NO. 1635

First published in The Legal Record, Tuesday, December 24, 1996.

ORDINANCE NO. 1635

AN ORDINANCE AMENDING SECTION 3-12 (SPECIAL DEVELOPMENT DISTRICT) OF THE LEAWOOD DEVELOPMENT ORDINANCE, AND REPEALING EXISTING SECTION.

Be it ordained by the Governing Body of the City of Leawood:

Section 1. Leawood Development Ordinance Amended. That Section 3-12 of the Leawood Development Ordinance is hereby amended to read as follows:

3-12 SD (SPECIAL DEVELOPMENT OVERLAY DISTRICT)

A) Statement of Objectives

1) Purpose: The City of Leawood recognizes that certain large land areas, because of their prominent location, thoroughfare exposure, parcel size, and their potential impact upon surrounding residential neighborhoods, require special consideration in their approval. Therefore, the SD, Special Development "Overlay" District has been created to identify and further establish such "special" areas of development in accordance with those areas indicated as SD, Special Development, on the Master Development Plan Map.

2) "Overlay" Defined: "Overlay" means a broad zoning category to which special land use categories (subdistricts) can be attached. For purposes of this section the SD district is the overlay zoning category to which the special land use categories (subdistricts) established in (4) below are to be attached.

3) Intent: The Special Development Overlay District is intended to:

a) Encourage a selected mix of high quality residential and non-residential development of particular land areas to expand the City's tax base and promote economic development.

b) Provide for appropriate design guidelines and development standards and conditions to protect the public health, safety and welfare.

c) Provide for necessary commercial facilities and employment centers conveniently located to housing particularly in the southern part of the City.

d) Encourage and require orderly development at a quality level equal to or exceeding that found in projects developed under planned zoning.

e) Permit certain deviations from the normal and established development techniques as provided herein when such deviation will result in a higher quality project.

f) Encourage a mix of selected residential, office and retail large scale developments.

g) Provide for innovative and imaginative site planning.

h) Encourage conservation of natural resources.

i) Encourage development of groupings of buildings or building sites that are planned as an integrated unit or clustered on property under unified control or ownership.

j) Provide for control of vehicular access.

k) Provide for control of architectural quality, landscaping and signage in order to soften any impact of such mixed use developments on nearby residential neighborhoods.

l) Minimize the effects of such development on the street system and other city provided services.

4) Sub-districts: For purposes of regulating the use and development of land within the Special Development Overlay District the following sub-districts have been established:

a) Sub-district (O): Office.

b) *Sub-district (OH): Office - High Rise*

CONTINUED ON PAGE 22

CONTINUED FROM PAGE 21

c) Sub-district (NCR): Neighborhood Commercial Retail-Mixed Use

d) Sub-district (CR): Commercial-Retail

Application for one or more of the subdistricts as established above shall be requested at the time of rezoning to an SD district and preliminary development plan approval or a revised preliminary development plan approval. Any substantial change requested to an approved preliminary or final development plan or request for change to a different subdistrict shall be considered a revised preliminary plan and shall be subject to the same notice and public hearing requirements and protest provisions as the original zoning application request.

5) Substantial Change - A substantial change for purposes of this section shall include any proposed:

a) Increase in F.A.R. Floor Area Ratio

b) Increase in building square footage over 5%

c) Increase in building height

d) Decrease in landscape open space ratio

e) Building relocation

f) Increase in outparcel size or their relocation

B) District Uses:

In District SD, no building, structure, land or premises shall be used and no building or structure shall be hereafter erected, constructed, reconstructed, moved or altered except for one or more of the permitted uses, conditionally permitted uses or accessory uses set forth under the appropriate sub-district in Table 3-12A.

All such uses are further subject to conformance with the other provisions of this section.

C) Permitted Uses: With respect to the applicable subdistrict "Permitted Uses" are those uses listed as such in Table 3-12A.

D) Accessory Uses: Those uses specifically listed as "Accessory Uses" in Table 3-12A.

1) The total square footage devoted to all accessory uses within a given building or an integrated group of buildings shall not exceed 25% of the total square footage of the building or the grouping of buildings.

2) (Reserved).

E) Conditional Uses: Those uses specifically listed as "Conditional Use" in Table 3-12A.

1) Requests for a conditional use as listed under a specific sub-district shown in Table 3-12A may be made as part of an application for preliminary or final development plan approval or may be made independently at anytime after zoning and sub-district are in place provided notice and hearing requirements have been met pursuant to Section 6-3 of this ordinance. If the proposed use is not a conditional use in the applicable sub-district, or if the application or site plan is determined to be incomplete, the Planning Director shall notify the applicant within 10 working days of the date of filing. Thereafter, the applicant may resubmit the application and site plan and the Planning Director shall treat the application and site plan as a new matter. If it is again rejected by the Planning Director, the applicant may file an appeal of such determination to the Plan Commission within 10 days of receipt of the Planning Director's decision. Failure of the Planning Director to act within 10 working days as set forth above shall constitute a determination that the proposed use is not permitted in the applicable sub-district or that the application or site plan is incomplete. The application and site plan **shall not** be "deemed approved" by a failure to act within the time period specified.

2) The Plan Commission shall consider an application for a conditional use as part of its consideration of any preliminary or final development plan. If the proposed use conforms with the general standards and specific requirements of this section, the Plan Commission shall make the appropriate findings, and approve the application for conditional use permit and site plan. Any such approval shall be conditioned upon approval of same by the Governing Body. If the proposed use does not conform with one or more of the general standards or specific requirements of this section, the findings of the Plan Commission shall so state, and the Plan Commission may either disapprove the application for conditional use or approve with stipulations so as to make the conditional use conform to the requirements. If disapproved the applicant may appeal such decision to the Governing Body by filing a request for appeal to the city clerk within 10 days of the date of disapproval by the Plan Commission.

F) Findings of Fact

1) The Plan Commission shall make the following findings of fact prior to approval of any application for rezoning to a Special Development Overlay District (SD) classification, request for change from one subdistrict to another, preliminary or revised preliminary development plan approval, and/or application for a conditional use:

a) That the proposed development/conditional use is in harmony with the general purpose, goals, objectives and standards of the SD Statement of Objectives, Master Development Plan and other adopted planning policies.

b) That the proposed development/conditional use will not be detrimental to existing adjacent uses or to other permitted uses in the sub-district.

c) That the proposed development/conditional use will not generate volumes and/or types of vehicular traffic that will be hazardous to or conflict with the existing or anticipated traffic in the sub-district or surrounding area.

d) That the proposed development/conditional use meets the height, area and design standards for the sub-district.

e) That the site plan for the proposed development/conditional use promotes a project design which will be compatible with permitted uses in the sub-district.

f) That the proposed development/conditional use will not result in an over concentration of such uses within the sub-district or surrounding area.

2) If the Plan Commission is unable to make one or more of the findings listed in the previous subsection, the Plan Commission may either recommend denial of the site plan application and/or conditional use request or recommend the attachment of specific conditions to the application for site plan approval and/or conditional use approval to ameliorate the adverse impact of the proposed use on the sub-district. Such conditions may include, but are not necessarily limited to, the following:

a) A time limit on the duration of a conditional use within the sub-district.

b) Mitigation of adverse impacts by additional on-site buffer, landscaping, setback or open space requirements.

c) Mitigation of adverse impacts by restrictions on density, floor area ratio, building or structure height or percentage of lot coverage.

d) Mitigation of adverse impacts by the provision of off-site public facilities or improvements.

e) Limitations on hours of operation of the proposed use.

f) Limitations on noise, odor, vibration, glare or particulate matter emanating from the proposed use.

g) Limitations on the number of employees of the proposed use.

h) Limitations on the materials stored or used on the site.

i) Requirements for a larger minimum lot area.

G) Temporary Uses: See Section 4-3, (32), Administrative Special Use Permit, of this ordinance.

H) Height and Area Regulations: In District SD, the minimum lot size, minimum building setback from residentially zoned/planned property, minimum yard dimensions (front, side and rear), maximum building height, minimum landscaped open space ratio and maximum floor area ratio shall be as set forth in Table 3-12B, except as may be otherwise permitted by Section 3-12 (I) (4)of this ordinance.

I) Standards of Development

1) The preliminary development plan shall designate the applicable subdistrict for each lot or tract shown on the plan. The uses for each lot or tract shall be those designated for the applicable subdistrict in Table 3-12A. Except as may be otherwise provided in Section 3-12 (I) (4) of this ordinance, the height and area regulations shall be as set forth for the applicable subdistrict in Table 3-12B.

2) Performance Criteria:

a) General:

1) All operations shall be conducted within a fully enclosed building; however, normal outdoor loading and unloading of materials is permitted.

2) Loading docks and service areas are not permitted on a street side of a building unless completely landscaped and totally screened from view and approved as a part of the development plan by the Plan Commission. Any loading dock or loading area shall be completely screened from public streets by a solid wall, fence or evergreen plantings. Hours of loading and unloading may be limited, depending upon location and surrounding property use.

3) All utility distribution lines shall be installed underground within the project.

4) All storage of materials, products or equipment shall be within a fully enclosed building except as specifically authorized by the Plan Commission and Governing Body, i.e. drive up windows, or sales requiring outdoor areas such as auto dealers, etc.

5) Drive in restaurants where food is normally served to customers in parked vehicles or where food is consumed outside a building are not permitted unless specifically authorized by the Plan Commission.

6) No use shall create noise in excess of that of normal daily traffic measured at the lot lines of the premises. In no case shall the noise level exceed 60 dB at repeated intervals or for a sustained length of time, measured at any point along the property line.

7) Architectural quality of the buildings must be equal on all sides of the structure such that all sides of the building are "finished".

8) No wholesale sales shall be conducted.

9) A proposed development shall contain not less than 10 acres and shall be developed by a single entity. Lots may be sold to separate users but the sale of lots must be accompanied by restrictive covenants assuring a high level of architecture, site improvements and their continued maintenance. Covenants shall include at a minimum, property owners' association, maintenance of individual sites and common areas, standards for finishing of buildings, and design standards for signs. Such standards shall be submitted with the preliminary site plan.

10) All trash must be stored inside of a structure that is compatible with the building design. The structure must be of materials that are comparable to the materials used in the buildings in the development. The design of the trash enclosures must be shown on the preliminary and final site plan.

11) All public sidewalks, where required or otherwise provided, shall be a minimum of 5 feet wide. Sidewalks at store fronts shall be a minimum of 10 feet wide.

12) No use shall create dust, dirt, particulate matter, smoke, noxious odor, radiation, noxious gases, heat, unscreened glare, vibration or concussion which is perceptible without special instruments at the lot lines of the premises.

13) All lights, other than publicly installed street lights, shall be located and installed to reflect the light away from abutting properties in an area zoned for or developed with residential structures.

b) 135th Street Corridor Additional Performance Standards/Criteria.

3) Additional Studies: The Plan Commission or Governing Body may, at any time in the process of approving preliminary development plans, revised

CONTINUED ON PAGE 23

CONTINUED FROM PAGE 22

preliminary development plans or conditional uses within district SD and its related subdistricts, require additional studies to be completed. Such studies may include but are not limited to the following:

a) Traffic Impact (Existing and Projected)

b) Noise

c) Lighting

d) Economic Impact

4) The Plan Commission or Governing Body may, in the process of approving preliminary or final development plans, approve deviations from the minimum standards set forth in Table 3-12B or other applicable provisions, provided that any deviation so approved shall be in keeping with accepted land planning principles and must be clearly set out in the minutes as well as on exhibits in the record, in accordance with the following limitations:

a) Deviations from minimum lot areas may be granted where buildings are clustered so long as the overall density of the development does not exceed applicable floor area ratios for the entire parcel. Any common open space resulting from the variance of such density standard shall be set aside for the use and benefit of the occupants of such development.

b) Floor area ratio FAR bonuses may be awarded only for developments in sub-districts (O) and (OH) as follows:

1) projects with landscaped open space ratios significantly in excess of the required minimum – up to 10% increase in the applicable maximum FAR;

2) projects with a landscaping plan demonstrating quantities and qualities of landscaping significantly superior to that of other developments in the City – up to 10% increase in the applicable maximum FAR;

3) projects with architecturally significant fountains, statuary and other decorative features – up to 10% increase in the applicable maximum FAR;

4) projects with pedestrian plazas and linkages, street furniture and other features designed to encourage pedestrian circulation and usage– up to 10% increase in the applicable maximum FAR;

5) projects containing lakes or ponds – up to 10% increase in the applicable maximum FAR; and

6) projects incorporating and demonstrating transportation management systems i.e., ride sharing, van pooling, flextime or other measures designed to significantly decrease peak hour vehicular trip generation – up to 10% increase in the applicable maximum FAR.

7) projects incorporating parking structures resulting in significant increases in landscaped open space - up to 20% increase in the applicable maximum FAR.

The determination of the satisfaction of the bonus criteria, and the amount of any bonus to be awarded, shall be at the sole discretion of the Governing Body. The total FAR, including all bonuses, shall not exceed an FAR of .35 for sub-district (O) or .45 for subdistrict (OH). All approved bonus increases are to be added together before being applied to the base FAR of the subdistrict for calculation.

J) Open Space: (See Section M.)

K) Building Coverage: (See Table 3-12B)

L) Parking and Loading Requirements:

1) Except as otherwise provided herein, the provisions of Section 4-4, Off-Street Parking, Storage, Loading Regulations and Parking Lot Design Standards, shall apply to all developments in district SD.

2) Where specific parking requirements are established for land uses in Section 4-4, those standards shall apply in this district. For buildings or portions of buildings for uses which are not listed in Section 4-4, the following general parking ratios shall be applied:

Subdistrict (O), (OH), (CR) and (NCR) – 5 spaces for each 1,000 square feet of gross floor area.

3) Shared Parking.

a) In mixed use buildings or developments where several buildings containing different uses share common parking areas, the applicant may be permitted to reduce the total number of parking spaces otherwise required by utilizing shared parking. For purposes of this subsection, shared parking is defined as parking spaces that can be used to serve 2 or more individual land uses without conflict or encroachment. Shared parking may result from either variations in the peak accumulation of parked vehicles due to time differences in the activity patterns of adjacent or nearby land uses (by hour, by day or by season) or as a result of relationships among land use activities that result in people being attracted to 2 or more land uses in a given area or development using a single vehicle trip. A shared parking study may be required by the Plan commission, Governing Body or Staff in order to determine the feasibility of its application in the proposed development. When required it shall be prepared by a professional traffic engineer acceptable to the City.

b) Shared parking studies submitted pursuant to this subsection shall, at a minimum, include the following information:

1) project analysis – involving the sizing and functional relationship of project land uses based upon market research, site constraints and other considerations;

2) peak parking factor adjustments – involving the selection of appropriate peak parking accumulation factors for each land use, and the adjustment of each factor to reflect site-specific factors such as transit use, ride sharing, flextime and captive markets;

3) accumulation analysis – involving the hourly, daily and seasonal estimation of parking accumulation for each component land use;

4) shared parking estimation – involving the hourly, daily and seasonal estimation of parking accumulation for the entire project.

c) Where a reduction in the number of required parking spaces for a project occurs as a result of a shared parking study, approval of the reduced number of parking spaces shall be conditioned upon a land use mix within the parameters of the uses described in the shared parking study. Changes in uses within the project may require compliance with the parking requirements otherwise applicable under this section or a revision of the shared parking study establishing different parking requirements.

4) Except as may be otherwise permitted by Section 3-12(I), paved parking areas shall be set back a minimum of 30 feet from any street right-of-way or perimeter property line.

M) Landscaping and Screening

1) In addition to any other requirement for landscaping and screening imposed pursuant to Section 4-6 of this ordinance, an application for final development plan shall be accompanied by a landscaping and screening plan complying with the provisions of this section.

2) Except to the extent that the requirements of this section are more stringent, the provisions of Section 4-6 shall also apply.

3) All landscaping plans shall be prepared and sealed by a Kansas or Missouri registered landscape architect and shall include the following information:

a) North point and scale.

b) Topographic information and final grading adequate to identify and properly specify planting for areas needing slope protection.

c) The location and size of all structures and parking areas.

d) The location, size and type of all above-ground and underground utilities and structures with proper notation, where appropriate, as to any safety hazards to avoid during installation of landscaping.

e) The location, size, type and quantity of all proposed landscaping materials, along with common and botanical names of all plant species. The size, grading and condition shall be specified according to American Association of Nurserymen standards.

f) The location, size and common name of all existing plant materials to be retained on the site.

g) Mature sizes of plant materials shall be drawn to scale and called out on the plan by a common name or appropriate key.

h) Location of hose connections and other watering sources.

i) The location of all trees, 12 inch caliper or larger, measured at 4-1/2 feet above ground level, that are proposed for removal.

j) All screening required by this section.

4) Plantings within landscaped open space areas, trees and shrubs shall be provided in accordance with the following minimum requirements:

a) 1 tree shall be provided for each 30 feet of public or private street frontage within the landscaped setback abutting said street frontage. Such trees may be clustered or arranged within the setback if approved as part of the landscape plan. In addition to the street trees, 1 shrub shall be provided for each 5 feet of public or private street frontage, or portion thereof, within the landscaped setback abutting such frontage. Such shrubs may be clustered or arranged within the setback.

b) A landscaped setback/buffer area is required along all property lines on the periphery of the area covered by the plan, other than street frontages. Notwithstanding any other provisions relating to yard requirements, such landscaped setback/buffer area shall be at least 30 feet. Within such landscaped setback/buffer area, 1 tree shall be provided for every 20 lineal feet along the property line, and one shrub shall be provided for each 10 feet along the property line. Such trees and shrubs may be clustered or arranged within the setback.

c) In addition to the trees required based upon street frontage, additional trees shall be required at a ratio of 1 tree for every 3,000 square feet of landscaped open space.

d) Existing trees saved on the site during construction may be credited toward the minimum number of trees required provided that such trees are a minimum 4 inch caliper as measured 4 1/2 feet above ground for medium and large deciduous species or 3 feet in height for ornamental and evergreen species. All existing plant material saved shall be healthy and free of mechanical injury.

e) All landscape areas shall be irrigated.

5) Parking areas shall be screened and landscaped in accordance with the following minimum requirements.

a) Parking Area Screening.

1) The perimeter area of all on-site, open parking areas shall be screened from the view of adjacent properties and streets at the time of planting to a minimum height of 3 feet by the use of berms, walls or plantings.

2) Parking lot screening shall be designed so as to avoid obstructing visibility at intersections from both vehicles in the parking lot and on adjacent streets. A clear sight distance triangle of 25 feet from an intersection shall be established to ensure visibility and safety.

3) 100% of the affected street frontage or property boundary,

CONTINUED ON PAGE 24

CONTINUED FROM PAGE 23

excluding intersecting driveways, must have the required screening.

4) Structures such as decorative walls or fences may be approved if:

a) The structure avoids a blank and monotonous appearance by such means as architectural articulation and/or the planting of vines, shrubs or trees; or

b) The total use of berms or plantings is not physically feasible; or

c) The structures complement the use of berms or plantings.

5) The reference elevation for the base of the required screen shall be the surface of the parking area that is to be screened.

6) *The following maximum grades shall be permitted in the parking* lot screen area:

a) Sodded Grass berms shall be 3 feet horizontal for each 1 foot vertical rise; and

b) Planting beds shall be 2 feet horizontal for each 1 foot vertical rise.

7) Where a parking lot is located adjacent to or come in direct contact with any landscaped setback/buffer area required pursuant to subsection 4 above, the landscaped setback/buffer area requirement shall apply and the above parking area screening requirements shall be waived.

b) Parking Area Landscaping:

1) Not less than 6% of the interior of a parking area shall be landscaped. The interior of a parking area shall be calculated by multiplying the number of parking spaces by 280 square feet. Plantings required along the perimeter of the parking area for screening shall not be considered as part of the interior landscaping requirement.

2) Landscaping and planting areas shall be reasonably dispersed throughout the parking area.

3) The interior dimensions of any planting area or planting median shall be sufficient to protect the landscaping materials planted therein and to ensure proper growth; in no event shall any such area be less than 60 square feet in area or 8 feet in width. Each area shall be protected by Portland cement concrete vertical curbs or similar structures.

4) The primary landscaping materials used in parking lots shall be trees which provide shade or are capable of providing shade at maturity. Shrubbery, hedges and other planting materials may be used to complement the tree landscaping, but shall not be the sole means of landscaping. Effective use of earth berms and existing topography is also encouraged as a component of the landscape plan.

5) In those instances where plant materials exist on a parking area site prior to its development, such materials may be used if approved as meeting the requirements in subsection 6 below.

6) Minimum planting requirements shall be as follows:

a) Medium and large deciduous shade trees – 2 1/2 inch caliper as measured 6 inches above ground.

b) Small deciduous or ornamental trees – 8 feet in height.

c) Conifers – 6 to 8 feet in height.

d) Upright evergreen trees – 8 feet in height.

e) Shrubs shall be a minimum container size of 5 gallons with a minimum mature height of 4 to 6 feet in height. The size of *spreader and globe tree form shall be determined by the* applicant.

f) Ground cover plants, whether in the form of crowns, plugs or containers, shall be planted in a number as appropriate by species to provide 50% surface coverage after two growing seasons.

g) Seeding for turf and native grass shall be as appropriate to provide complete coverage within the first growing season.

h) Sod shall be used where required or where necessary to provide coverage and soil stabilization.

i) Landscaped open space shall consist of a minimum of 60% living materials; the remaining area may consist of non-living materials such as bark, wood chips, decorative rock or stone or other similar materials.

7) All required landscaping materials, both living and non-living, shall be in place prior to the time of issuance of a final Certificate of Occupancy, weather permitting. *In periods of adverse weather* conditions, a temporary Certificate of Occupancy may be issued, subject to all landscaping be installed prior to the final Certificate of Occupancy being issued.

8) All landscaping shall be maintained in accordance with the following requirements:

a) All landscaping materials depicted on landscaping plans approved by the City shall be considered to be elements of the project in the same manner as parking, building materials and other details. The developer, its successor and/or subsequent owners and their agents shall be responsible for maintenance of *landscaping on the property on a continuing basis for the life of* the development. Plant materials which exhibit evidence of insect pests, disease or damage shall be appropriately treated, and dead plants promptly removed and replaced within the next planting season after installation. All landscaping will be subject to periodic inspection by the City. Should landscaping not be installed, maintained and replaced as needed to comply with the approved plan, the owner and its agent or agents shall be considered to be in violation of the terms of the Certificate of Occupancy. The Director of Planning and Development is empowered to enforce the terms of this section.

b) (Reserved)

9) Landscaping and screening plans shall include a detailed drawing of enclosure and screening methods as provided hereinafter:

a) Trash enclosures shall be screened from public view on at least 3 sides with a 6 foot solid fence constructed of cedar, redwood, masonry or other compatible building material, and shall be *appropriately landscaped.*

b) Exterior ground-mounted or building-mounted equipment including, but not limited to, mechanical equipment, utilities and meter banks, shall be screened from public view with landscaping or with an architectural treatment compatible with the building structure.

c) All rooftop equipment shall be screened from the public view with an architectural treatment which is compatible with the building architecture.

d) For purposes of this subsection, the phrase screened from public view," means not visible at eye level from an adjoining property line or any street right-of-way.

N) Signage:

1) Sign criteria for each development or each phase of the development shall be submitted for review by the Staff prior to filing an application for final development plan approval. The sign criteria shall address all aspects of signage within the development, or *phase of the development, including numbers, types, sizes,* shapes and colors of signs to be permitted in the development. The Staff shall make its recommendation concerning the sign criteria to the Plan Commission at the time of consideration of the final development plan. Once the sign criteria has been approved as part of the final development plan, the requirements of the sign criteria shall be enforced by the City in the same manner that it enforces any other sign regulation contained in this ordinance.

2) As a guide for preparing sign criteria for SD developments, the developer should generally refer to sign requirements for the most analogous zoning district in *determining the number, types and sizes of signs to be permitted in any sub-*district. For purposes of this subsection, the "most analogous zoning district" for each SD sub-district shall be as follows:

a) Sub-district (O), (OH) – District CP-O.

b) Sub-districts (NCR) – District CP-1.

c) Sub-districts (CR) –District CP-2.

3) Except as altered above, the provisions of Section 4-5 of this ordinance shall apply to all SD developments.

O) Procedures for Rezoning to SD and Approval of Development Plans

1) Except to the extent modified by Section 3-12, rezoning to the SD district shall follow the same procedure of other zoning reclassifications as set forth in Article 6 of this ordinance.

2) Preliminary, revised preliminary and final development plans shall be considered and acted upon as set forth in Section 6-2 of this ordinance.

3) Applications for conditional uses, and site plans in support thereof, may be considered as part of the Plan Commission's consideration of any preliminary, revised preliminary or final development plan. Where publication notice and notice to surrounding *property owners pursuant to Section 6-3 of this ordinance is required for* consideration of any such plan, the publication notice and notice to surrounding property owners shall include a statement that specified conditionally permitted use(s) are being requested. Applications for conditional uses to be considered separately shall also require a public hearing, pursuant to Section 6-3 of this ordinance Any conditional use approved for a lot or tract covered by a plan shall be so designated on *the plan.*

P) Planned Zoning Procedures: Except to the extent modified by this Section, the provisions of Section 6-2 pertaining to planned zoning districts shall be applicable to district SD.

Q) 135th Street Corridor Supplemental Provisions (Reserved for future addition/135th Street Study)

1) Purpose Statement (Reserved)

2) Design Guidelines (Reserved)

R) FAR (Floor Area Ratio) Calculations (See Definition and Corresponding Diagram)

S) Definitions: The following definitions are to be used in conjunction with Article 8 of this ordinance. If overlapping of definitions occur the ones specifically included below shall govern in the SD District.

Animal Care, Limited means a use providing animal care, boarding and veterinary services for household pets, with no outside animal runs. See also "Kennel".

Assisted Living means multi-family dwelling units used or designed to be used by older persons, persons with disabilities or other persons needing or desiring assistance with day-to-day living matters, but not including group homes, group housing, hospitals or convalescent care facilities. Typical uses include retirement communities in which housekeeping services, common dining facilities and recreational and social activities are offered to residents.

Communication Tower means commercial AM/FM radio, television, microwave and cellular telephone transmission towers and accessory equipment and buildings.

CONTINUED ON PAGE 25

CONTINUED FROM PAGE 24

Convalescent Care means an establishment providing bed care and inpatient services for persons needing regular medical attention, but excluding facilities for the care and treatment of mental illness, alcoholism, narcotics addiction, emergency medical services or communicable disease. Typical uses include nursing homes.

Cultural Service means a facility providing cultural and educational services to the public. Typical uses include museums, art museums, observatories, planetariums, botanical gardens, arboretums, zoos and aquariums.

Day Care, Commercial means a day care establishment that provides care, protection and supervision for 11 or more individuals at any one time, including those under the supervision or custody of the day care provider.

Day Care, General means a day care center that provides care, protection and supervision for seven to ten individuals at any one time, including those under the supervision or custody of the day care provider.

Day Care, Limited means a day care center that provides care, protection and supervision for six or fewer individuals at any one time, including those under the supervision or custody of the day care provider.

Day Care means an establishment that provides care, protection and supervision for individuals on a regular basis away from their primary residence for less than 24 hours per day. The term includes kindergartens, nursery schools and other similar programs regardless of auspices.

Floor Area Ratio (FAR) means the total square foot of floor area on a zoning lot, divided by the total square feet of lot area of that zoning lot. *Floor area ratio (FAR) is used to impose limits on commercial development intensity. An FAR of 1 allows one square foot of building for each square foot of land use, while an FAR of 4 allows four square feet of building for each square foot of land area. A commercial zone with FAR requirements may also have bulk requirements, such as a 50-percent limit on lot coverage, which would mean that a building in a zone with an FAR of 1 may be a two-story building on half the lot.* **The Practice of Local Government Planning.**

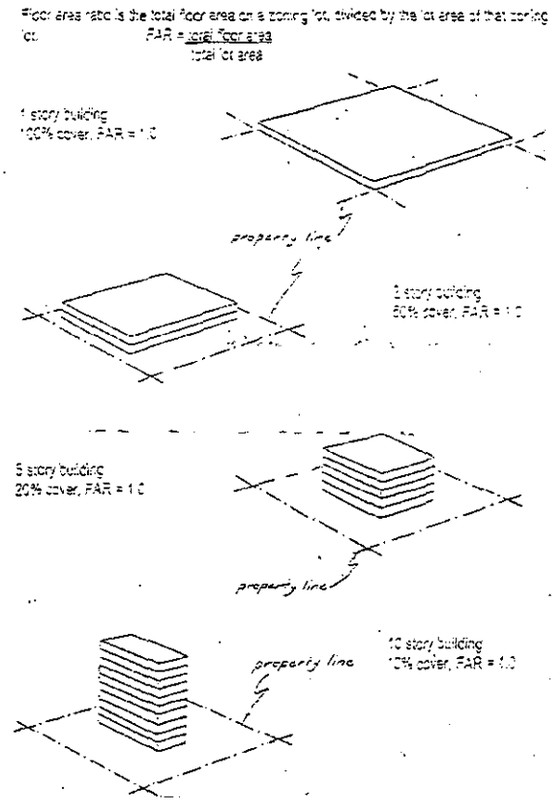

Funeral Home means an establishment engaged in preparing the human deceased for burial or cremation and arranging and managing funerals.

Golf Course means a facility providing private or public golf recreation services and support facilities. This definition shall exclude miniature golf courses and golf driving ranges except those that are clearly accessory uses. See "Recreation and Entertainment, Outdoor."

Government Service means buildings or facilities owned or operated by a government entity and providing services for the public, excluding utilities and park and recreation services. Typical uses include administrative offices of government agencies and utility billing offices.

Health Club means a facility where members or nonmembers use equipment or space for the purpose of physical exercise.

Heliport or Helipad means an area, either on the ground or on a building, used as a landing pad for helicopters to pick up or discharge passengers or cargo.

Kennel means boarding, breeding or training facilities for three or more dogs that are more than six months of age, including dogs owned by the occupants of the property. See also "Animal Care, Limited".

Library means a publicly-operated establishment housing a collection of books, magazines, audio and video tapes and other material for borrowing and use by the public.

Medical Service means an establishment providing therapeutic, preventive, or corrective personal treatment services on an outpatient basis by physicians, dentists, and other practitioners of the medical or healing arts, and the provision of medical testing and analysis services. Typical uses include clinics and offices for doctors of medicine, dentists, chiropractors, osteopaths, optometrists, blood banks and medical laboratories.

Office, General means an establishment providing executive, management, administrative or professional services, but not medical or dental services or the sale of merchandise, except as incidental to a permitted use. Typical uses include real estate, insurance, property management, investment, employment, travel, advertising, law, architecture, design, engineering, accounting and similar offices.

Parks and Recreation means a park, playground or community facility, owned by or under the control of a public agency or homeowners' association, that provides opportunities for active or passive recreational activities.

Post Office means a facility used for the collection, sorting and distribution of U.S. mail among several zip code areas and having limited retail services for the public, such as the sale of stamps, postcards and postal insurance.

Printing and Publication means the production of books, magazines, newspapers and other printed matter, and record pressing and publishing, engraving and photoengraving, but excluding businesses involved solely in retail photocopying, reproduction, photo developing or blueprinting services. See "Retail Sales and Services."

Recreation and Entertainment, Indoor means an establishment offering recreation, entertainment or games of skill to the public for a fee or charge and that is wholly enclosed in a building. Typical uses include bowling alleys, indoor theatres, bingo parlors, pool halls, billiard parlors and video game arcades.

Recreation and Entertainment, Outdoor means an establishment offering recreation, entertainment or games of skill to the public for a fee or charge, wherein any portion of the activity takes place in the open. Typical uses include archery ranges, batting cages, golf driving ranges, drive-in theaters and miniature golf courses.

Religious Assembly means a site used by a religious group primarily or exclusively for religious worship and related religious services, including a place of worship, retreat site or religious camp.

Repair Service means an establishment primarily engaged in the provision of repair services to individuals and households but excluding "Vehicle Repair" services. Typical uses include appliance repair shops.

Research Services means an establishment engaged in conducting basic and applied research, including production of prototype products when limited to the minimum scale necessary for full investigation of the merits of a product, excluding production o products used primarily or customarily for sale or for use in non-prototype production operations.

Retail Sales and Service means an establishment engaged in the sale or rental of goods and services, excluding uses more specifically defined.

Safety Service means a facility for conduct of public safety and emergency services, including fire and police protection services and emergency medical and ambulance services.

School Elementary, Middle or High means the use of a site for instructional purposes on an elementary or secondary level.

Studio, Television or Film means an establishment primarily engaged in the provision of recording or broadcasting services accomplished through the use of electronic mechanisms.

Vocational School means a use providing education or training in business, commercial trades, language, arts or other similar activity or occupational pursuit, and not otherwise defined as a "College or University" or "School."

Table 3-12A

TABLE OF USES

(Uses)	Special Development Sub-Districts (O), (OR)	(CR)	(NCR)
Residential			
Assisted Living	C	C	C
Medium Density Single Family Residential	C	C	C
Multi-family	C	C	C
Public/Quasi-Public and Commercial			
Adult Entertainment	X	X	X
Animal Care, Limited	X	P	P
Bank or Financial Institution	C	P	P
Bed and Breakfast	C	C	C
Club, Private	C	C	C
College or University	C	C	C
Communication Tower	C	C	X
Convalescent Care	C	P	P
Cultural Service	C	C	C
Delivery Services (Not to include freight transfer, i.e. semi-tractor trailer)	C	P	P
Day Care, Limited (1-6)	A	A	A
Day Care, General (7-10)	C	P	P
Day Care, Commercial (11+)	C	C	C
Funeral Home	C	P	C
Golf Course	C	C	C
Government Service	P	P	P
Health Club	C	P	P
Heliport or Helipad	C	C	X
Hospital	C	C	X
Hotel/Motel	C	C	X
Kennel, Indoor (no outside exercise area or dog run)	X	C	X
Library	P	P	P
Medical Service	C	P	P
Office, General	P	P	P
Parks and Recreation	C	C	C
Personal Services	P	P	P
Post Office	C	P	C
Printing and Publishing	C	P	C
Recreation and Entertainment, Indoor (excludes uses in retail Sales and Services)	C	C	C
Recreation and Entertainment, Outdoor	C	C	X
Religious Assembly	C	C	C
Repair Service	X	P	C
Research Service	X	C	C
Retail Sales and Service			
*Appliance Sales/Service	X	P	P
*Art Gallery/Commercial	X	P	P
*Auto Parts supply	X	C	C
*Auto Service Centers/TBA (Tire, Battery & Accessories)	X	C	C
*Bakery(Retail only)	X	P	P
*Bar/Tavern	X	C	C
*Barber/Beauty Shop	A	P	P
*Boat Sales/Service	X	C	C
*Bicycle Shop	X	P	P
*Book/Stationary/Gift Shop	X	P	P

P = Permitted Use C= Conditional Use A= Accessory Use X= Prohibited Use

CONTINUED ON PAGE 26

Table 3-12A Continued

TABLE OF USES

(Uses)	Special Development Sub-Districts (O), (OH)	(CR)	(NCR)
Retail Sales and Service continued...			
*Bowling Alley/Center	X	C	C
*Business Services	X	P	P
*Building Materials Sales, Indoor/Totally Enclosed	X	C	X
*Camera Shop/Photographic Studio	X	P	P
*Catalog Center	X	P	P
*Car Wash, Full Service/Totally Enclosed	X	C	X
*Clothing/Accessory Store	X	P	P
*Computer Sales and Service	X	P	P
*Construction Sales and Service, Indoor/Totally Enclosed	X	P	X
*Convenience Store	X	C	C
*Department Store	X	C	C
*Dry Cleaner	X	P	P
*Drug Store/Health Care Supply	X	P	P
*Electronic Sales and Service	X	P	P
*Flower Shop/Garden Store	X	P	P
*Food Stores, Specialty	X	P	P
*Furniture/Home Furnishings	X	P	C
*Gas Station	X	C	C
*Grocery Store/Supermarket	X	P	C
*Hardware Store	X	P	P
*Home Accessory Shop/Boutique	X	P	P
*Home Remodeling and Light construction Supply/Sales	X	C	C
*Jewelry Store	X	P	P
*Movie Rental/Sales	X	P	X
*Movie Theater/Indoor	X	P	P
*Music Store	X	P	X
*Office Supply	X	P	P
*Packaged Liquor Sales	X	P	P
*Pet Shop	X	C	X
*Restaurant, Fast Food with Drive Through	X	P	P
*Restaurant, Fast Food, Dine In/Carry Out	X	C	X
*Restaurant, General	X	C	P
*Sewing/Fabric Store	X	P	P
*Shoe Store/Repair	X	P	P
*Shopping Center	X	P	P
*Sporting Goods Sales/Rental	X	P	C
*Tailoring/Alterations	X	P	P
*Toy/Hobby Shop	X	P	P
*Vehicle and Equipment Sales and Service	X	P	P
*BIG BOX RETAIL (OVER 60,000 SQ.FT.)	X	C	X
Public/Quasi-Public and Commercial continued...	X	C	X
Safety Services			
School, Public and Private, Elementary, Middle or High	C	P	C
Studio, Television or Film	C	C	C
Transitional Living Facility	C	P	P
Veterinarian	C	P	C
Vocational School	X	P	P
	C	P	C

P = Permitted Use C = Conditional Use A = Accessory Use X = Prohibited Use

Table 3-12B

TABLE OF REGULATIONS

Applicable Regulations	Special Development Sub-Districts (O)	(CR)	(NCR)	(CH)
Minimum lot size	10 acres minimum are required for SD district establishment	10 acres minimum are required for SD district establishment	10 acres minimum are required for SD district establishment	10 acres minimum are required for SD district establishment
Building setback from residential master planned or zoned property	75 ft. or applicable yard requirement whichever is greater	75 ft. or applicable yard requirement whichever is greater	75 ft. or applicable yard requirement whichever is greater	Same as (O)
Maximum height	6 Stories	60 ft.	40 ft.	none
Maximum floor area ratio without bonuses (with bonuses)	.25 (.35)	.25	.20	.35 (.45)
Minimum landscaped open space ratio	.25	.25	.35	.25
Minimum front yard	40 ft. or height of building whichever is greater up to maximum of 150 ft.	40 ft. or height of building whichever is greater	40 ft.	Same as (O)
Minimum side yard	40 ft. plus 1 ft. for each 1 ft. of building height in excess of 75 ft. up to maximum of 150 ft.	40 ft.	40 ft.	Same as (O)
Minimum rear yard	40 ft. plus 1 ft. for each 1 ft. of building height in excess of 75 ft. up to maximum of 150 ft.	40 ft.	40 ft.	Same as (O)

Section 2. Repeal of Existing Section. That existing Section 3-12 of the Leawood Development Ordinance is hereby repealed.

Section 3. Take Effect. That this ordinance shall take effect and be in force from and after its publication in the official City newspaper.

Passed by the Council the 16th day of December, 1996.

Approved by the Mayor the 16th day of December, 1996.

(SEAL)

Marcia Rinehart

Marcia Rinehart, Mayor

ATTEST:

Martha Heizer

Martha Heizer, City Clerk

APPROVED FOR FORM:

/s/ R.S. Wetzler

R.S. Wetzler, City Attorney

Ordinance No. 1634 C

AN ORDINANCE AMENDING ARTICLE 10 OF CHAPTER 1 (ADMINISRATION) OF THE CODE OF THE CITY OF LEAWOOD RELATING TO THE PROPER AND EFFICIENT MANAGEMENT OF GOVERNMENT RECORDS FOR THE CITY OF LEAWOOD, KANSAS; AND REPEAL OF EXISTING ARTICLE.

BE IT ORDAINED BY THE GOVERNING BODY OF THE CITY OF LEAWOOD:

SECTION 1. **CODE AMENDED.** That Article 10 of Chapter 1 of the Code of the City of Leawood is hereby amended to read as follows:

ARTICLE 10.
RECORDS MANAGEMENT PROGRAM OF THE CITY OF LEAWOOD

1-1001. SHORT TITLE. This ordinance shall be known and may be cited as the "Records Management Program of the City of Leawood".

1-1002. PURPOSE. The City of Leawood's records management program is intended to provide for the proper and efficient management of government records.

1-1003. DEFINITIONS.

Active Records. Records in current use; often retained in offices because frequent reference is needed.

Archives. Official records possessing permanent value.

Essential records. Any record of the city necessary to the resumption or continuation of operations of the city in an emergency or disaster, including but not limited to the re-creation of the legal or financial status of the city or to the protection and fulfillment of obligations to the residents of the city.

Inactive records. Records which are seldom referred to, but which must be retained, temporarily or permanently, because of administrative, fiscal, legal, historical and/or research value.

Municipal records. All records created, maintained, received by the City of Leawood, Kansas, its officers or employees.

Non-records. All materiel not usually included within the definition of records, including but not limited to, unofficial copies, reference publications, processed documents, etc.

Records. All documents, papers, letters, reports, drawings, plans, ledgers, maps, disks, microfilm, sound or video recordings, photographs and/or other materiel, regardless of physical form or characteristics, created, maintained or received by the of the City of Leawood, its officers or employees.

Records management. A system of efficient and effective techniques used in the creation, storage, retrieval and disposition of recorded information.

1-1004. RESPONSIBILITIES. It shall be the responsibility of each officer and employee of the City to maintain, preserve and dispose records in accordance with applicable federal or state law and with such rules as may be instituted by the City.

It shall be the responsibility of the City Clerk to oversee administration of the Records Management Program of the City of Leawood. Each department shall cooperate with the City Clerk in applying standards, procedures and techniques designed to improve the management of the City's records.

Each City department shall be the legal custodian of its active and inactive records. The City Clerk shall be the legal and physical custodian of all records transferred to the archives.

1-1005. PROGRAM ADMINISTRATION. The Records Management Program shall be administered in such a way as to assure that the records of the City of Leawood are professionally managed, including proper and effective maintenance, preservation and disposition.

The City shall develop rules and regulations as may be necessary and proper to implement and maintain the City's Records Management Program. Once approved, such rules and regulations shall be binding on all employees and officers as well as on all commissions, boards, committees or similar entities of the City.

1-1006. SAME; INVENTORY ESTABLISHED. Each department and/or division of the City shall create and maintain an inventory of records adequate and proper to document functions, policies, decisions, procedures, and essential transactions of the City.

1-1007. SAME; RETENTION AND DISPOSAL PROCEDURES ESTABLISHED. City staff shall prepare retention and disposition schedules for all inventoried records. Said schedules shall

- indicate any state retention requirements as well as establish City retention requirements;
- establish which municipal records are essential records of the City;
- provide for permanent preservation of municipal records with administrative, fiscal, legal, historical and/or research value; and
- document any destruction requirements for records approved for disposal.

1-1008. OWNERSHIP OF RECORDS. All municipal records shall be the property of the City. No City official or employee has, by virtue of position, any personal or property right to municipal records and the unauthorized destruction, removal or use of such records is prohibited.

SECTION 2. **REPEAL OF EXISTING ARTICLE.** That existing Article 10 of Chapter 1 of the Code of City of Leawood are hereby repealed. (Prior Law Ord. 1150C; 2-20-90)

SECTION 3. **TAKE EFFECT.** That this ordinance shall take effect and be in force from and after its publication in the official City newspaper.

Passed by the Governing Body this, the 2nd day of December, 1996.

Approved by the Mayor this, the 2nd day of December, 1996.

Marcia Rinehart

Marcia Rinehart, Mayor

Attest:

Martha Heizer

Martha Heizer, City Clerk

Approved for form:

Richard Wetzler, City Attorney

ORD1634C

Publication Fees: $46.05

The Legal Record
600 E. Santa Fe, Suite 4
Olathe, KS 66061-3700

CITY OF LEAWOOD
ATTN: MARTHA HEIZER
4800 TOWN CENTER DR
LEAWOOD, KS 66211

Proof of Publication

STATE OF KANSAS, JOHNSON COUNTY, SS;
Tammy Schwien, of lawful age, being first duly sworn, deposes and says that she is Legal Notices Administrator of The Legal Record which is a newspaper printed in the State of Kansas, published in and of general paid circulation on a weekly, monthly or yearly basis in Johnson County, Kansas, is not a trade, religious or fraternal publication, is published at least weekly fifty (50) times a year, has been so published continuously and uninterrupted in said County and State for a period of more than five (5) years prior to the first publication of the notice attached, and has been admitted at the post office as second class matter (now called periodicals class).
That a notice was published in all editions of the regular and entire issue for the following subject matter (also identified by the following case number, if any) for 1 consecutive week(s), as follows:

ORDINANCE NO. 1634C--12/10/96

Tammy Schwien
Legal Notices Administrator

Subscribed and sworn to before me on this date:
December 11, 1996

Debra Dziadura
Notary Public

DEBRA DZIADURA
Notary Public - State of Kansas

My appointment expires: August 21, 1999.

$46.05

ORDINANCE NO. 1634 C

First published in The Legal Record, Tuesday, December 10, 1996.

Ordinance No. 1634 C

AN ORDINANCE AMENDING ARTICLE 10 OF CHAPTER 1 (ADMINISRATION) OF THE CODE OF THE CITY OF LEAWOOD RELATING TO THE PROPER AND EFFICIENT MANAGEMENT OF GOVERNMENT RECORDS FOR THE CITY OF LEAWOOD, KANSAS; AND REPEAL OF EXISTING ARTICLE.

BE IT ORDAINED BY THE GOVERNING BODY OF THE CITY OF LEAWOOD:

SECTION 1. **CODE AMENDED.** That Article 10 of Chapter 1 of the Code of the City of Leawood is hereby amended to read as follows:

ARTICLE 10.
RECORDS MANAGEMENT PROGRAM OF THE CITY OF LEAWOOD

1-1001. SHORT TITLE. This ordinance shall be known and may be cited as the "Records Management Program of the City of Leawood".

1-1002. PURPOSE. The City of Leawood's records management program is intended to provide for the proper and efficient management of government records.

1-1003. DEFINITIONS.

Active Records. Records in current use; often retained in offices because frequent reference is needed.

Archives. Official records possessing permanent value.

Essential records. Any record of the city necessary to the resumption or continuation of operations of the city in an emergency or disaster, including but not limited to the re-creation of the legal or financial status of the city or to the protection and fulfillment of obligations to the residents of the city.

Inactive records. Records which are seldom referred to, but which must be retained, temporarily or permanently, because of administrative, fiscal, legal, historical and/or research value.

Municipal records. All records created, maintained, received by the City of Leawood, Kansas, its officers or employees.

Non-records. All materiel not usually included within the definition of records, including but not limited to, unofficial copies, reference publications, processed documents, etc.

Records. All documents, papers, letters, reports, drawings, plans, ledgers, maps, disks, microfilm, sound or video recordings, photographs and/or other materiel, regardless of physical form or characteristics, created, maintained or received by the of the City of Leawood, its officers or employees.

Records management. A system of efficient and effective techniques used in the creation, storage, retrieval and disposition of recorded information.

1-1004. RESPONSIBILITIES. It shall be the responsibility of each officer and employee of the City to maintain, preserve and dispose records in accordance with applicable federal or state law and with such rules as may be instituted by the City.

It shall be the responsibility of the City Clerk to oversee administration of the Records Management Program of the City of Leawood. Each department shall cooperate with the City Clerk in applying standards, procedures and techniques designed to improve the management of the City's records.

Each City department shall be the legal custodian of its active and inactive records. The City Clerk shall be the legal and physical custodian of all records transferred to the archives.

1-1005. PROGRAM ADMINISTRATION. The Records Management Program shall be administered in such a way as to assure that the records of the City of Leawood are professionally managed, including proper and effective maintenance, preservation and disposition.

The City shall develop rules and regulations as may be necessary and proper to implement and maintain the City's Records Management Program. Once approved, such rules and regulations shall be binding on all employees and officers as well as on all commissions, boards, committees or similar entities of the City.

1-1006. SAME; INVENTORY ESTABLISHED. Each department and/or division of the City shall create and maintain an inventory of records adequate and proper to document functions, policies, decisions, procedures, and essential transactions of the City.

1-1007. SAME, RETENTION AND DISPOSAL PROCEDURES ESTABLISHED. City staff shall prepare retention and disposition schedules for all inventoried records. Said schedules shall

- indicate any state retention requirements as well as establish City retention requirements;
- establish which municipal records are essential records of the City;
- provide for permanent preservation of municipal records with administrative, fiscal, legal, historical and/or research value; and
- document any destruction requirements for records approved for disposal.

1-1008. OWNERSHIP OF RECORDS. All municipal records shall be the property of the City. No City official or employee has, by virtue of position, any personal or property right to municipal records and the unauthorized destruction, removal or use of such records is prohibited.

SECTION 2. **REPEAL OF EXISTING ARTICLE.** That existing Article 10 of Chapter 1 of the Code of City of Leawood are hereby repealed. (Prior Law Ord. 1150C; 2-20-90)

SECTION 3. **TAKE EFFECT.** That this ordinance shall take effect and be in force from and after its publication in the official City newspaper.

Passed by the Governing Body this, the 2nd day of December 1996.

Approved by the Mayor this, the 2nd day of December 1996.

(SEAL)

Margia Rinehart, Mayor

Attest:

Martha Heizer, City Clerk

Approved for form:

/s/ R.S. Wetzler

Richard Wetzler, City Attorney

ORDINANCE NO. 1633

AN ORDINANCE AUTHORIZING, ORDERING AND PROVIDING FOR THE CONSTRUCTION OF STORM SEWERS, WITHIN THE CITY OF LEAWOOD, KANSAS BEGINNING ON THE SOUTHEAST CORNER OF 119TH STREET AND ENSLEY ROAD (11901 ENSLEY ROAD) , THENCE SOUTHERLY FOR A DISTANCE OF APPROXIMATELY 662 FEET STOPPING AT 11919 WINDSOR ROAD, TO INCLUDE IMPROVEMENTS ALONG 120 FEET OF WINDSOR ROAD, PURSUANT TO THE PROVISIONS OF K.S.A. 12-631r ET. SEQ.

WHEREAS, it has been proposed that the City of Leawood, Kansas (the "City") build and construct storm water sewers and/or drains beginning on the Southeast corner of 119th Street and Ensley Road (11901 Ensley Road), thence southerly for a distance of approximately 662 feet stopping at 11919 Windsor Road, to include improvements along 120 feet of Windsor Road, all within the City of Leawood (the "Project") for the purpose of carrying off storm water from the streets, avenues and alleys of the City, and the City Engineer has caused preliminary plans therefor to be prepared and the estimated cost of the Project has been determined to be approximately $ 500,000; and

WHEREAS, the Governing Body of the City hereby finds and determines that it is necessary and advisable to proceed with the Project;

NOW, THEREFORE, BE IT ORDAINED BY the Governing Body of the City of Leawood, Kansas:

Section 1. That the Governing Body hereby finds and determines that it is necessary and desirable to build and construct storm water sewers and/or drains beginning on the Southeast corner of 119th Street and Ensley Road (11901 Ensley Road), thence southerly for a distance of approximately 662 feet stopping at 11919 Windsor Road, to include improvements along 120 feet of Windsor Road, all within the City of Leawood and hereby authorizes and approves the Project.

Section 2. That the Governing Body hereby authorizes and directs the City Engineer to proceed with development of definitive plans and construction of the Project.

Section 3. That the Governing Body hereby authorizes the preparation of a resolution of intent to issue general obligations of the City for the purpose of paying for the Project.

Section 4. That this ordinance shall be in force and effect from and after its approval by the Governing Body and publication in the official City newspaper.

Passed by the Governing Body of the City of Leawood, Kansas this 18th day of November, 1996.

Approved by the Mayor this 25th day of November, 1996

(SEAL)

Attest:

Marcia Rinehart Mayor

Martha Heizer City Clerk

APPROVED FOR FORM:

R.S. Wetzler City Attorney

2657402

STATE OF KANSAS
COUNTY OF JOHNSON ss
FILED FOR RECORD

8.00 96 DEC -2 P 4:05

SARA F. ULLMANN
REGISTER OF DEEDS

ORDINANCE NO. 1633

AN ORDINANCE AUTHORIZING, ORDERING AND PROVIDING FOR THE CONSTRUCTION OF STORM SEWERS, WITHIN THE CITY OF LEAWOOD, KANSAS BEGINNING ON THE SOUTHEAST CORNER OF 119TH STREET AND ENSLEY ROAD (11901 ENSLEY ROAD), THENCE SOUTHERLY FOR A DISTANCE OF APPROXIMATELY 662 FEET STOPPING AT 11919 WINDSOR ROAD, TO INCLUDE IMPROVEMENTS ALONG 120 FEET OF WINDSOR ROAD, PURSUANT TO THE PROVISIONS OF K.S.A. 12-631r ET. SEQ.

WHEREAS, it has been proposed that the City of Leawood, Kansas (the "City") build and construct storm water sewers and/or drains beginning on the Southeast corner of 119th Street and Ensley Road (11901 Ensley Road), thence southerly for a distance of approximately 662 feet stopping at 11919 Windsor Road, to include improvements along 120 feet of Windsor Road, all within the City of Leawood (the "Project") for the purpose of carrying off storm water from the streets, avenues and alleys of the City, and the City Engineer has caused preliminary plans therefor to be prepared and the estimated cost of the Project has been determined to be approximately $ 500,000; and

WHEREAS, the Governing Body of the City hereby finds and determines that it is necessary and advisable to proceed with the Project;

NOW, THEREFORE, BE IT ORDAINED BY the Governing Body of the City of Leawood, Kansas:

Section 1. That the Governing Body hereby finds and determines that it is necessary and desirable to build and construct storm water sewers and/or drains beginning on the Southeast corner of 119th Street and Ensley Road (11901 Ensley Road), thence southerly for a distance of approximately 662 feet stopping at 11919 Windsor Road, to include improvements along 120 feet of Windsor Road, all within the City of Leawood and hereby authorizes and approves the Project.

Section 2. That the Governing Body hereby authorizes and directs the City Engineer to proceed with development of definitive plans and construction of the Project.

Section 3. That the Governing Body hereby authorizes the preparation of a resolution of intent to issue general obligations of the City for the purpose of paying for the Project.

8.00 CK

Section 4. That this ordinance shall be in force and effect from and after its approval by the Governing Body and publication in the official City newspaper.

Passed by the Governing Body of the City of Leawood, Kansas this 18th day of November, 1996.

Approved by the Mayor this 25th day of November, 1996

(S E A L)

Marcia Rinehart Mayor

Attest:

Martha Heizer City Clerk

APPROVED FOR FORM:

R.S. Wetzler City Attorney

CERTIFICATE

State of Kansas
County of Johnson
City of Leawood

I, Martha Heizer, City Clerk of the City of Leawood, Kansas, hereby certify that the above and foregoing is a true and correct copy of Ordinance No. 1633 as the same appears in my office.

In testimony whereof, I have hereunto signed my name and affixed the seal of said city this 25th day of November, 1996.

(S E A L)

Martha Heizer, City Clerk

ORIGINAL COMPARED WITH RECORD

Ret- City of Leawood
attn: Martha Heizer
4800 Town Center Drive
Leawood, Ks. 66211

JOHNSON COUNTY, KANSAS
FILED FOR RECORD
JAN 20 1998
CLERK OF THE DISTRICT COURT

Sara F. Ullmann, Register of Deeds, Johnson County, Kansas

2657402

TO: Whom It May Concern

FROM: Sara F. Ullmann

RE: Refiling of Documents

Ignore per Harry 12/12/96 - not rec. - City's paying for project anyway. lwt

****

The Register of Deeds office has received the documents presented for filing and has recorded and indexed them in the grantor-grantee index as required by law. We have determined that there may have been a clerical error in the following item(s):

_____Incorrect Spelling of Names _____Incorrect Spelling of Subdivision Name

_____Other: _____

This office also maintains a tract index which is based on the legal description given in the document. This tract index is used as a cross reference to the grantor-grantee index for easier access to the information. Your documents were unable to be filed in the tract index for the following reason(s):

_____Incorrect Legal Description ___✓___No Legal Description

_____Other:_____ _____Incorrect Subdivision Name

To have the document indexed in the tract index, the following steps need to be taken:

___✓___1. Document being refiled to correct typographical errors may use a Document Refiling Affidavit in Johnson County (sample enclosed). This Document Refile Affidavit must be recorded as a separate document. The charges are $6.00 for the first page and $2.00 for each additional page for each document.

___✓___2. Documents being refiled to include additional information must be resigned, and renotarized, and state on the document the reason for refiling.

_____3. All corrections must be made on the original document.

_____4. Fill out a mortgage registration fee affidavit (sample enclosed).

The Register of Deeds reserves the right to ascertain each refile on a case by case basis.

If you have any questions, please feel free to contact this office at anytime for clarification.

Reviewed 2/13/95 verrfl.frm

111 South Cherry Street, P.O. Box 700, Olathe, Kansas 66051 (913) 764-8484 Ext.5375

AFFIDAVIT
(Document Refiling)

STATE OF KANSAS)
) SS:
COUNTY OF JOHNSON)

_____ ("Affiant"), of lawful age, upon oath states:

1. That Affiant has personal knowledge of the statements and facts contained herein.

2. That this Affidavit is delivered to Sara F. Ullmann, Register of Deeds of Johnson County, Kansas, to induce said Register of Deeds to record the referenced document.

3. That the document is being tendered to the Register of Deeds of Johnson County, Kansas, for re-recording due to an error in the original thereof, recorded at Volume _____, Page _____, to-wit:
_____
_____
_____.

4. That Affiant has full authority from the signatories of the document to correct the error described above.

5. That the undersigned and his/her company will indemnify and hold harmless the Register of Deeds of Johnson County, Kansas, from and against any and all loss, cost, or liability arising from the correction of the aforesaid error.

FURTHER AFFIANT SAITH NAUGHT.

_____

_____
(Type or print name under signature)

SUBSCRIBED AND SWORN TO before me this _____ day of _____, 199____.

My appointment expires:

_____

_____
Notary Public

_____
(Type or print name under signature)

Document being refiled to correct typographical errors may use a Document Refiling Affidavit in Johnson County. This Document Refile Affidavit must be recorded as a separate document. The charges are $6.00 for the first page and $2.00 for each additional page for each document.

The Legal Record
600 E. Santa Fe, Suite 4
Olathe, KS 66061-3700

ORD1633

Publication Fees: $30.23

CITY OF LEAWOOD
ATTN: MARTHA HEIZER
4800 TOWN CENTER DR
LEAWOOD, KS 66211

Proof of Publication

STATE OF KANSAS, JOHNSON COUNTY, SS;
Tammy Schwien, of lawful age, being first duly sworn, deposes and says that she is Legal Notices Administrator of The Legal Record which is a newspaper printed in the State of Kansas, published in and of general paid circulation on a weekly, monthly or yearly basis in Johnson County, Kansas, is not a trade, religious or fraternal publication, is published at least weekly fifty (50) times a year, has been so published continuously and uninterrupted in said County and State for a period of more than five (5) years prior to the first publication of the notice attached, and has been admitted at the post office as second class matter (now called periodicals class).
That a notice was published in all editions of the regular and entire issue for the following subject matter (also identified by the following case number, if any) for 1 consecutive week(s), as follows:

ORDINANCE NO. 1633--11/26/96

Tammy Schwien
Legal Notices Administrator

Subscribed and sworn to before me on this date:
November 26, 1996

Debra Dziadura
Notary Public

DEBRA DZIADURA
Notary Public - State of Kansas

My appointment expires: August 21, 1999.

ORDINANCE NO. 1633

First published in The Legal Record, Tuesday, November 26, 1996.

ORDINANCE NO. 1633

AN ORDINANCE AUTHORIZING, ORDERING AND PROVIDING FOR THE CONSTRUCTION OF STORM SEWERS, WITHIN THE CITY OF LEAWOOD, KANSAS BEGINNING ON THE SOUTHEAST CORNER OF 119TH STREET AND ENSLEY ROAD (11901 ENSLEY ROAD), THENCE SOUTHERLY FOR A DISTANCE OF APPROXIMATELY 662 FEET STOPPING AT 11919 WINDSOR ROAD, TO INCLUDE IMPROVEMENTS ALONG 120 FEET OF WINDSOR ROAD, PURSUANT TO THE PROVISIONS OF K.S.A. 12-631r ET. SEQ.

WHEREAS, it has been proposed that the City of Leawood, Kansas (the "City") build and construct storm water sewers and/or drains beginning on the Southeast corner of 119th Street and Ensley Road (11901 Ensley Road), thence southerly for a distance of approximately 662 feet stopping at 11919 Windsor Road, to include improvements along 120 feet of Windsor Road, all within the City of Leawood (the "Project") for the purpose of carrying off storm water from the streets, avenues and alleys of the City, and the City Engineer has caused preliminary plans therefor to be prepared and the estimated cost of the Project has been determined to be approximately $ 500,000; and

WHEREAS, the Governing Body of the City hereby finds and determines that it is necessary and advisable to proceed with the Project;

NOW, THEREFORE, BE IT ORDAINED BY the Governing Body of the City of Leawood, Kansas:

Section 1. That the Governing Body hereby finds and determines that it is necessary and desirable to build and construct storm water sewers and/or drains beginning on the Southeast corner of 119th Street and Ensley Road (11901 Ensley Road), thence southerly for a distance of approximately 662 feet stopping at 11919 Windsor Road, to include improvements along 120 feet of Windsor Road, all within the City of Leawood and hereby authorizes and approves the Project.

Section 2. That the Governing Body hereby authorizes and directs the City Engineer to proceed with development of definitive plans and construction of the Project.

Section 3. That the Governing Body hereby authorizes the preparation of a resolution of intent to issue general obligations of the City for the purpose of paying for the Project.

Section 4. That this ordinance shall be in force and effect from and after its approval by the Governing Body and publication in the official City newspaper.

Passed by the Governing Body of the City of Leawood, Kansas this 18th day of November, 1996.

Approved by the Mayor this 25th day of November, 1996

(SEAL)

Marcia Rinehart
Marcia Rinehart Mayor

Attest:

Martha Heizer
Martha Heizer City Clerk

APPROVED FOR FORM:
R.S. Wetzler City Attorney

ORDINANCE NO. 1632

AN ORDINANCE REZONING PROPERTY (COLLINA DE VITA) LOCATED AT APPROXIMATELY 145TH AND MISSION ROAD FROM AG (AGRICULTURAL) TO RP-A10 (PLANNED RURAL DENSITY SINGLE FAMILY RESIDENTIAL); DIRECTING AMENDMENT OF THE OFFICIAL ZONING MAP OF THE CITY OF LEAWOOD, KANSAS; AND REINCORPORATING SAID ZONING MAP.

Be it ordained by the Governing Body of the City of Leawood:

Section 1. Rezoning of Property. That the real estate hereinafter described, to wit:

> This is a survey and subdivision of a part of the Southwest Quarter of Section 4, Township 14, Range 25, in the City of Leawood, Johnson County, Kansas, being more particularly described as follows: Commencing at the Southeast corner of the Northeast Quarter of said Section 4; thence N 0°33'30" W, along the East line of the Northeast Quarter of said Section 4, a distance of 691.96 feet, to the Southeast corner of the South Half of the North Half of the Southeast Quarter of the Northeast Quarter of said Section 4, said point also being the True Point of Beginning; thence continuing N 0° 33'30" W, along the East line of the Northeast Quarter of said Section 4, a distance of 330.98 feet, to the Northeast corner of the South Half of the North Half of the Southeast Quarter of the Northeast Quarter of said Section 4; thence S 89°41'12" W, along the North line of the South Half of the North Half of the Southeast Quarter of the Northeast Quarter of said Section 4, a distance of 1329.33 feet, to the Northwest corner thereof; thence S 0°31'03" E, along the West line of the Southeast Quarter of the Northeast Quarter of said Section 4, a distance of 330.26 feet, to the Southwest corner of the South Half of the North Half of the Southeast Quarter of the Northeast Quarter of said Section 4; thence N 89°43'03" E, along the South line of the South Half of the North Half of the Southeast Quarter of the Northeast Quarter of said Section 4, a distance of 1329.57 feet, to the True Point of Beginning, containing 10.090 Acres, more or less, of unplatted land.

now zoned AG, is hereby rezoned to RP-A10.

Section 2. Official Zoning Map Amended. That the Director of Planning and Development of the City of Leawood, Kansas, is hereby directed to amend the Official Zoning Map of the City in accordance with the above and foregoing changes in zoning.

Section 3. Reincorporation of Official Zoning Map as Amended. That the Official Zoning Map of the City, as amended by the provisions of this ordinance, is hereby

reincorporated and declared to be the Official Zoning Map of the City.

Section 4. Take Effect. That this ordinance shall take effect and be in force from and after its publication in the official City newspaper.

Passed by the Council the 18th day of November, 1996.

Approved by the Mayor the 25th day of November, 1996.

(SEAL)

Marcia Rinehart
Marcia Rinehart Mayor

Attest:

Martha Heizer
Martha Heizer City Clerk

APPROVED FOR FORM:

R.S. Wetzler
R.S. Wetzler City Attorney

The Legal Record

600 E. Santa Fe, Suite 4
Olathe, KS 66061-3700

CITY OF LEAWOOD
ATTN: MARTHA HEIZER
4800 TOWN CENTER DR
LEAWOOD, KS 66211

Proof of Publication

STATE OF KANSAS, JOHNSON COUNTY, SS;
Tammy Schwien, of lawful age, being first duly sworn, deposes and says that she is Legal Notices Administrator of The Legal Record which is a newspaper printed in the State of Kansas, published in and of general paid circulation on a weekly, monthly or yearly basis in Johnson County, Kansas, is not a trade, religious or fraternal publication, is published at least weekly fifty (50) times a year, has been so published continuously and uninterrupted in said County and State for a period of more than five (5) years prior to the first publication of the notice attached, and has been admitted at the post office as second class matter (now called periodicals class).
That a notice was published in all editions of the regular and entire issue for the following subject matter (also identified by the following case number, if any) for 1 consecutive week(s), as follows:

ORDINANCE NO. 1632--11/26/96

Tammy Schwien
Legal Notices Administrator

Subscribed and sworn to before me on this date:
November 26, 1996

Debra Dziadura
Notary Public

DEBRA DZIADURA
Notary Public - State of Kansas

My appointment expires: August 21, 1999.

ORD1632

Publication Fees: $28.72

ORDINANCE NO. 1632

First published in The Legal Record, Tuesday, November 26, 1996.

ORDINANCE NO. 1632

AN ORDINANCE REZONING PROPERTY (COLLINA DE VITA) LOCATED AT APPROXIMATELY 145TH AND MISSION ROAD FROM AG (AGRICULTURAL) TO RP-A10 (PLANNED RURAL DENSITY SINGLE FAMILY RESIDENTIAL); DIRECTING AMENDMENT OF THE OFFICIAL ZONING MAP OF THE CITY OF LEAWOOD, KANSAS; AND REINCORPORATING SAID ZONING MAP.

Be it ordained by the Governing Body of the City of Leawood:

Section 1. Rezoning of Property. That the real estate hereinafter described, to wit:

This is a survey and subdivision of a part of the Southwest Quarter of Section 4, Township 14, Range 25, in the City of Leawood, Johnson County, Kansas, being more particularly described as follows: Commencing at the Southeast corner of the Northeast Quarter of said Section 4; thence N 0°33'30" W, along the East line of the Northeast Quarter of said Section 4, a distance of 691.96 feet, to the Southeast corner of the South Half of the North Half of the Southeast Quarter of the Northeast Quarter of said Section 4, said point also being the True Point of Beginning; thence continuing N 0° 33'30" W, along the East line of the Northeast Quarter of said Section 4, a distance of 330.98 feet, to the Northeast corner of the South Half of the North Half of the Southeast Quarter of the Northeast Quarter of said Section 4; thence S 89°41'12" W, along the North line of the South Half of the North Half of the Southeast Quarter of the Northeast Quarter of said Section 4, a distance of 1329.33 feet, to the Northwest corner thereof; thence S 0°31'03" E, along the West line of the Southeast Quarter of the Northeast Quarter of said Section 4, a distance of 330.26 feet, to the Southwest corner of the South Half of the North Half of the Southeast Quarter of the Northeast Quarter of said Section 4; thence N 89°43'03" E, along the South line of the South Half of the North Half of the Southeast Quarter of the Northeast Quarter of said Section 4, a distance of 1329.57 feet, to the True Point of Beginning, containing 10.090 Acres, more or less, of unplatted land.

now zoned AG, is hereby rezoned to RP-A10.

Section 2. Official Zoning Map Amended. That the Director of Planning and Development of the City of Leawood, Kansas, is hereby directed to amend the Official Zoning Map of the City in accordance with the above and foregoing changes in zoning.

Section 3. Reincorporation of Official Zoning Map as Amended. That the Official Zoning Map of the City, as amended by the provisions of this ordinance, is hereby reincorporated and declared to be the Official Zoning Map of the City.

Section 4. Take Effect. That this ordinance shall take effect and be in force from and after its publication in the official City newspaper.

Passed by the Council the 18th day of November, 1996.

Approved by the Mayor the 25th day of November, 1996.

(S E A L)

Marcia Rinehart, Mayor

Attest:

Martha Heizer, City Clerk

APPROVED FOR FORM:

R.S. Wetzler, City Attorney

ORDINANCE NO. 1631

AN ORDINANCE ACCEPTING A DEED OF DEDICATION FROM PEMBROKE COURT HOMES ASSOCIATION, CONVERTING PRIVATE STREETS IN THE SUBDIVISION TO PUBLIC STREETS.

WHEREAS, Pembroke Court, a subdivision in the City of Leawood, was originally developed as a subdivision served by private streets; and

WHEREAS, the owners of property in Pembroke Court desire to make the streets of Pembroke Court public; and

WHEREAS, the Pembroke Court Homes Association has provided a deed to the City conveying to the City of Leawood their interests in those tracts of land that have been to the current date used as private streets; and

WHEREAS, the Pembroke Court Homes Association has requested the City to accept the deed dedicating the tracts of ground described in said deed for use by the City as public right of way; and

WHEREAS, the City has agreed to accept the tracts of ground specifically described in the Deed of Dedication for the use of the City as public right of way;

NOW, THEREFORE, BE IT ORDAINED BY THE GOVERNING BODY OF THE CITY OF LEAWOOD:

Section 1. That the City of Leawood hereby accepts a deed from the Pembroke Court Homes Association, and accepts the tracts of ground, as specifically described in said deed and previously used as private streets, as public streets to be maintained by the City of Leawood.

Section 2. That a copy of said Deed of Dedication is attached hereto and thereby incorporated by reference.

Section 3. That this ordinance shall take effect and be in force from and after its publication in the official City newspaper.

Passed by the Council the 18th day of November, 1996.

Approved by the Mayor the 25th day of November, 1996.

(SEAL)

Marcia Rinehart
Mayor

Attest:

Martha Heizer

Martha Heizer City Clerk

APPROVED FOR FORM:

R.S. Wetzler City Attorney

ORD1631

Publication Fees: $19.27

The Legal Record
600 E. Santa Fe, Suite 4
Olathe, KS 66061-3700

CITY OF LEAWOOD
ATTN: MARTHA HEIZER
4800 TOWN CENTER DR
LEAWOOD, KS 66211

Proof of Publication

STATE OF KANSAS, JOHNSON COUNTY, SS;
Tammy Schwien, of lawful age, being first duly sworn, deposes and says that she is Legal Notices Administrator of The Legal Record which is a newspaper printed in the State of Kansas, published in and of general paid circulation on a weekly, monthly or yearly basis in Johnson County, Kansas, is not a trade, religious or fraternal publication, is published at least weekly fifty (50) times a year, has been so published continuously and uninterrupted in said County and State for a period of more than five (5) years prior to the first publication of the notice attached, and has been admitted at the post office as second class matter (now called periodicals class).
That a notice was published in all editions of the regular and entire issue for the following subject matter (also identified by the following case number, if any) for 1 consecutive week(s), as follows:

ORDINANCE NO. 1631--11/26/96

Tammy Schwien
Legal Notices Administrator

Subscribed and sworn to before me on this date:
November 26, 1996

Debra Dziadura
Notary Public

DEBRA DZIADURA
Notary Public - State of Kansas

My appointment expires: August 21, 1999.

ORDINANCE NO. 1631

First published in The Legal Record, Tuesday, November 26, 1996.

ORDINANCE NO. 1631

AN ORDINANCE ACCEPTING A DEED OF DEDICATION FROM PEMBROKE COURT HOMES ASSOCIATION, CONVERTING PRIVATE STREETS IN THE SUBDIVISION TO PUBLIC STREETS.

WHEREAS, Pembroke Court, a subdivision in the City of Leawood, was originally developed as a subdivision served by private streets; and

WHEREAS, the owners of property in Pembroke Court desire to make the streets of Pembroke Court public; and

WHEREAS, the Pembroke Court Homes Association has provided a deed to the City conveying to the City of Leawood their interests in those tracts of land that have been to the current date used as private streets; and

WHEREAS, the Pembroke Court Homes Association has requested the City to accept the deed dedicating the tracts of ground described in said deed for use by the City as public right of way; and

WHEREAS, the City has agreed to accept the tracts of ground specifically described in the Deed of Dedication for the use of the City as public right of way;

NOW, THEREFORE, BE IT ORDAINED BY THE GOVERNING BODY OF THE CITY OF LEAWOOD:

Section 1. That the City of Leawood hereby accepts a deed from the Pembroke Court Homes Association, and accepts the tracts of ground, as specifically described in said deed and previously used as private streets, as public streets to be maintained by the City of Leawood.

Section 2. That a copy of said Deed of Dedication is attached hereto and thereby incorporated by reference.

Section 3. That this ordinance shall take effect and be in force from and after its publication in the official City newspaper.

Passed by the Council the 18th day of November, 1996.

Approved by the Mayor the 25th day of November, 1996.

(S E A L)

Marcia Rinehart
Marcia Rinehart Mayor

Attest:

Martha Heizer
Martha Heizer City Clerk

APPROVED FOR FORM:
R.S. Wetzler City Attorney

$19.27

ORDINANCE NO. 1630 C

AN ORDINANCE ADOPTING THE 1996 EDITION OF THE NATIONAL ELECTRICAL CODE AS PUBLISHED BY THE NATIONAL FIRE PROTECTION ASSOCIATION "NFPA NO. 70-1996" REGULATING CONDITIONS, TERMS, SPECIFICATIONS AND CONTROL OF ELECTRICAL WIRING SYSTEMS WITHIN THE CITY OF LEAWOOD, KANSAS; PROVIDING FOR THE ISSUANCE OF PERMITS AND COLLECTION OF FEES THEREFOR; PROVIDING FOR PENALTIES FOR VIOLATIONS THEREOF; AND REPEALING EXISTING ARTICLE OF THE CODE OF THE CITY OF LEAWOOD.

Be it ordained by the Governing Body of the City of Leawood:

Section 1. Code Amended. That Article 3 ("Electrical Code") of Chapter 4 of the Code of the City of Leawood is hereby amended to read as follows:

ARTICLE 3. ELECTRICAL CODE

4-301. NATIONAL ELECTRICAL CODE INCORPORATED. The National Electrical Code, 1996 edition , as published by the National Fire Protection Association (NFPA No. 70-1996) is hereby adopted and incorporated in this chapter as fully as if set forth herein, excepting only such parts or portions thereof as are specifically added or changed in Sections 4-302 through 4-308 of this article. Three copies of this document shall be on file in the office of the City Clerk.

4-302. NATIONAL ELECTRICAL CODE AMENDED; ARTICLE 110-2. 110-2 is hereby changed to read as follows: No wiring system or equipment shall be installed within or on any building or structure or premises, nor shall any alteration or addition be made in any such existing installation without first securing approval and a permit from the Building Official. Permits shall only be issued to licensed contractors and homeowners per Section 4-208 of the Code of the City of Leawood. All permitted work shall be inspected by the Inspection Division of Planning and Development. EXCEPTION: Temporary services installed for construction activities and installed under the supervision of the supplying utility shall not require a permit or inspection.

4-303. SAME; ARTICLE 110-5. 110-5 is hereby changed to read as follows: Conductors. Conductors normally used to carry current shall be of copper unless otherwise provided in this code. Conductors for residential application shall be copper. Conductors for branch circuits (#6 AWG [copper] and below) shall be copper on commercial and industrial applications.

4-304. SAME; ARTICLE 210-71. 210-71 is hereby added to read

as follows: Receptacle Outlets. Receptacle outlets installed in commercial and office buildings shall be adequate to serve the needs of the occupant using the space. Adequacy shall be determined by the Building Official at the time that plans are submitted for permits. Any additional receptacle outlets required shall be noted on the plans and installed. Commercial office occupancies shall have a wall receptacle every 12 running feet. Other non-residential occupancies shall have a minimum of one receptacle on each wall.

4-305. SAME; ARTICLE 230-23(d). 230-23(d) is hereby added to read as follows: Entrance Conductor and Equipment. Services shall be sized in accordance with the following provisions: Service conductors, bus bars and equipment ratings shall not be less than 80 percent of the combined ampacity of the service switches or circuit breakers. Service entrance conductors may be aluminum or copper-clad only if larger than #6 (copper) and when installed in commercial installations. All residential service conductors shall be copper.

4-306. VIOLATION; PENALTIES. Any person who violates a provision of this code or fails to comply with any of the requirements thereof or who erects, constructs, alters, or repairs an electrical system in violation of an approved plan or directive of the Building Official, or of a permit or certificate issued under the provisions of this chapter, or other references incorporated, is guilty of a public offense, punishable as provided in Section 4-202 of the Code of the City of Leawood.

4-307. STOP WORK ORDERS; PENALTIES. Any person and/or company who shall continue any work on the system after having been served with a stop work order except such work as that person and/or company is directed to perform to remove a violation or unsafe condition, shall be liable to a fine of not less than five hundred dollars ($500.00).

4-308. LIABILITY. Requirements stated in this chapter and all existing codes and ordinances in force shall not be construed as imposing on the City, its officials, agents, or employees, any liability or responsibility for damages to any property or injury to any person due to defective installations. The City or any official, employee or agent thereof, shall not assume any liability or responsibility whatsoever by reason of inspection or approval of any installation.

Section 2. Repeal of Existing Article. That existing Article 3 ("Electrical Code") of Chapter 4 of the Code of the City of Leawood is hereby repealed. (Prior law: Ord. No. 1351C)

Section 3. Validity of Ordinance. That should any section, paragraph, sentence, clause or phrase of this ordinance be declared unconstitutional or invalid for any reason, the remainder shall not be thereby affected.

Section 4. Take Effect. That this ordinance shall take effect and be in force on December 1, 1996.

Passed by the Council the 4th day of November, 1996.

Approved by the Mayor the 4th day of November, 1996.

(SEAL)

Marcia Rinehart Mayor

Attest:

Martha Heizer City Clerk

APPROVED FOR FORM:

R.S. Wetzler City Attorney

ORD1630C

Publication Fees: $46.44

The Legal Record
600 E. Santa Fe, Suite 4
Olathe, KS 66061-3700

CITY OF LEAWOOD
ATTN: MARTHA HEIZER
4800 TOWN CENTER DR
LEAWOOD, KS 66211

Proof of Publication

STATE OF KANSAS, JOHNSON COUNTY, SS;
Tammy Schwien, of lawful age, being first duly sworn, deposes and says that she is Legal Notices Administrator of The Legal Record which is a newspaper printed in the State of Kansas, published in and of general paid circulation on a weekly, monthly or yearly basis in Johnson County, Kansas, is not a trade, religious or fraternal publication, is published at least weekly fifty (50) times a year, has been so published continuously and uninterrupted in said County and State for a period of more than five (5) years prior to the first publication of the notice attached, and has been admitted at the post office as second class matter (now called periodicals class).
That a notice was published in all editions of the regular and entire issue for the following subject matter (also identified by the following case number, if any) for 1 consecutive week(s), as follows:

ORDINANCE NO. 1630C--11/5/96

Tammy Schwien
Legal Notices Administrator

Subscribed and sworn to before me on this date:
November 6, 1996

Debra Dziadura
Notary Public

DEBRA DZIADURA
Notary Public - State of Kansas

My appointment expires: August 21, 1999.

$46.44

ORDINANCE NO. 1630 C

First published in The Legal Record, Tuesday, November 5, 1996.

ORDINANCE NO. 1630 C

AN ORDINANCE ADOPTING THE 1996 EDITION OF THE NATIONAL ELECTRICAL CODE AS PUBLISHED BY THE NATIONAL FIRE PROTECTION ASSOCIATION "NFPA NO. 70-1996" REGULATING CONDITIONS, TERMS, SPECIFICATIONS AND CONTROL OF ELECTRICAL WIRING SYSTEMS WITHIN THE CITY OF LEAWOOD, KANSAS; PROVIDING FOR THE ISSUANCE OF PERMITS AND COLLECTION OF FEES THEREFOR; PROVIDING FOR PENALTIES FOR VIOLATIONS THEREOF; AND REPEALING EXISTING ARTICLE OF THE CODE OF THE CITY OF LEAWOOD.

Be it ordained by the Governing Body of the City of Leawood:

Section 1. Code Amended. That Article 3 ("Electrical Code") of Chapter 4 of the Code of the City of Leawood is hereby amended to read as follows:

ARTICLE 3. ELECTRICAL CODE

4-301. NATIONAL ELECTRICAL CODE INCORPORATED. The National Electrical Code, 1996 edition, as published by the National Fire Protection Association (NFPA No. 70-1996) is hereby adopted and incorporated in this chapter as fully as if set forth herein, excepting only such parts or portions thereof as are specifically added or changed in Sections 4-302 through 4-308 of this article. Three copies of this document shall be on file in the office of the City Clerk.

4-302. NATIONAL ELECTRICAL CODE AMENDED; ARTICLE 110-2. 110-2 is hereby changed to read as follows: No wiring system or equipment shall be installed within or on any building or structure or premises, nor shall any alteration or addition be made in any such existing installation without first securing approval and a permit from the Building Official. Permits shall only be issued to licensed contractors and homeowners per Section 4-208 of the Code of the City of Leawood. All permitted work shall be inspected by the Inspection Division of Planning and Development. EXCEPTION: Temporary services installed for construction activities and installed under the supervision of the supplying utility shall not require a permit or inspection.

4-303. SAME; ARTICLE 110-5. 110-5 is hereby changed to read as follows: Conductors. Conductors normally used to carry current shall be of copper unless otherwise provided in this code. Conductors for residential application shall be copper. Conductors for branch circuits (#6 AWG [copper] and below) shall be copper on commercial and industrial applications.

4-304. SAME; ARTICLE 210-71. 210-71 is hereby added to read as follows: Receptacle Outlets. Receptacle outlets installed in commercial and office buildings shall be adequate to serve the needs of the occupant using the space. Adequacy shall be determined by the Building Official at the time that plans are submitted for permits. Any additional receptacle outlets required shall be noted on the plans and installed. Commercial office occupancies shall have a wall receptacle every 12 running feet. Other non-residential occupancies shall have a minimum of one receptacle on each wall.

4-305. SAME; ARTICLE 230-23(d). 230-23(d) is hereby added to read as follows: Entrance Conductor and Equipment. Services shall be sized in accordance with the following provisions: Service conductors, bus bars and equipment ratings shall not be less than 80 percent of the combined ampacity of the service switches or circuit breakers. Service entrance conductors may be aluminum or copper-clad only if larger than #6 (copper) and when installed in commercial installations. All residential service conductors shall be copper.

4-306. VIOLATION; PENALTIES. Any person who violates a provision of this code or fails to comply with any of the requirements thereof or who erects, constructs, alters, or repairs an electrical system in violation of an approved plan or directive of the Building Official, or of a permit or certificate issued under the provisions of this chapter, or other references incorporated, is guilty of a public offense, punishable as provided in Section 4-202 of the Code of the City of Leawood.

4-307. STOP WORK ORDERS; PENALTIES. Any person and/or company who shall continue any work on the system after having been served with a stop work order except such work as that person and/or company is directed to perform to remove a violation or unsafe condition, shall be liable to a fine of not less than five hundred dollars ($500.00).

4-308. LIABILITY. Requirements stated in this chapter and all existing codes and ordinances in force shall not be construed as imposing on the City, its officials, agents, or employees, any liability or responsibility for damages to any property or injury to any person due to defective installations. The City or any official, employee or agent thereof, shall not assume any liability or responsibility whatsoever by reason of inspection or approval of any installation.

Section 2. Repeal of Existing Article. That existing Article 3 ("Electrical Code") of Chapter 4 of the Code of the City of Leawood is hereby repealed. (Prior law: Ord. No. 1351C)

Section 3. Validity of Ordinance. That should any section, paragraph, sentence, clause or phrase of this ordinance be declared unconstitutional or invalid for any reason, the remainder shall not be thereby affected.

Section 4. Take Effect. That this ordinance shall take effect and be in force on December 1, 1996.

Passed by the Council the 4th day of November, 199

Approved by the Mayor the 4th day of November, 199

(S E A L)

Marcia Rinehart Mayo

Attest:

Martha Heizer City Clerk

APPROVED FOR FORM:

R.S. Wetzler City Attorne

ORDINANCE NO. 1629 C

AN ORDINANCE ADOPTING THE 1996 EDITION OF THE INTERNATIONAL MECHANICAL CODE GOVERNING THE CONDITIONS, TERMS, SPECIFICATIONS AND CONTROL OF THE DESIGN AND INSTALLATION OF MECHANICAL SYSTEMS WITHIN THE CITY OF LEAWOOD, KANSAS; PROVIDING FOR THE ISSUANCE OF PERMITS AND THE COLLECTION OF FEES THEREFOR; PROVIDING FOR PENALTIES FOR THE VIOLATION THEREOF; AND REPEALING EXISTING ARTICLE OF THE CODE OF THE CITY OF LEAWOOD.

Be it ordained by the Governing Body of the City of Leawood:

Section 1. Code Amended. That Article 5 ("Mechanical Code") of Chapter 4 of the City of Leawood is hereby amended to read as follows:

ARTICLE 5. MECHANICAL CODE

4-501. INTERNATIONAL MECHANICAL CODE ADOPTED. The International Mechanical Code, including all appendices except Appendix B, 1996 edition, as published by the International Code Council, is hereby adopted and incorporated in this chapter as fully as if set forth herein, excepting only such parts or portions thereof as are specifically added or changed in Sections 4-502 through 4-504 of this article. Three copies of this document shall be in file in the Office of the City Clerk.

4-502. INTERNATIONAL MECHANICAL CODE AMENDED; SEC. 106. PERMITS. Sec. 106.4, Permit Issuance. Add the following: All permits shall be posted so as to be visible from the street.

4-503. SAME; SEC. 108. VIOLATIONS. Sec. 108.4, Violation Penalties, is hereby changed to read as follows: Any person who violates a provision of this code or fails to comply with any of the requirements thereof or who erects, constructs, alters, or repairs any mechanical systems in violation of an approved plan or directive of the building official, or of a permit or certificate issued under the provisions of this code, or other references incorporated, is guilty of a public offense, punishable as provided in Section 4-202 of the Code of the City of Leawood.

4-504. SAME; SEC. 108, VIOLATIONS. Sec. 108.5, Stop Work Orders, is hereby changed, so that the last sentence shall read as follows: Any person and/or company who shall continue any work on the system after having been served with a stop work order, except such work as that person and/or company is directed to perform to remove a violation or unsafe

condition, shall be liable to a fine of not less than five hundred Dollars ($500.00).

Section 2. Repeal of Existing Article. That existing Article 5 ("Mechanical Code") of Chapter 4 of the Code of the City of Leawood is hereby repealed. (Prior law: Ord. No. 1479C)

Section 3. Validity of Ordinance. That if any section, subsection, sentence, clause or phrase of this ordinance be declared unconstitutional or invalid for any reason, the remainder shall not be thereby affected.

Section 4. Take Effect. That this ordinance shall take effect and be in force on December 1, 1996.

Passed by the Council the 4th day of November, 1996.

Approved by the Mayor the 4th day of November, 1996.

(S E A L)

Marcia Rinehart Mayor

Attest:

Martha Heizer City Clerk

APPROVED FOR FORM:

R.S. Wetzler City Attorney

ORD1629C

Publication Fees: $29.55

The Legal Record
600 E. Santa Fe, Suite 4
Olathe, KS 66061-3700

CITY OF LEAWOOD
ATTN: MARTHA HEIZER
4800 TOWN CENTER DR
LEAWOOD, KS 66211

Proof of Publication

STATE OF KANSAS, JOHNSON COUNTY, SS;
Tammy Schwien, of lawful age, being first duly sworn, deposes and says that she is Legal Notices Administrator of The Legal Record which is a newspaper printed in the State of Kansas, published in and of general paid circulation on a weekly, monthly or yearly basis in Johnson County, Kansas, is not a trade, religious or fraternal publication, is published at least weekly fifty (50) times a year, has been so published continuously and uninterrupted in said County and State for a period of more than five (5) years prior to the first publication of the notice attached, and has been admitted at the post office as second class matter (now called periodicals class).
That a notice was published in all editions of the regular and entire issue for the following subject matter (also identified by the following case number, if any) for 1 consecutive week(s), as follows:

ORDINANCE NO. 1629C--11/5/96

Tammy Schwien
Legal Notices Administrator

Subscribed and sworn to before me on this date:
November 6, 1996

Notary Public

DEBRA DZIADURA
Notary Public - State of Kansas

My appointment expires: August 21, 1999.

$29.55

ORDINANCE NO. 1629 C

First published in The Legal Record, Tuesday, November 5, 1996.

ORDINANCE NO. 1629 C

AN ORDINANCE ADOPTING THE 1996 EDITION OF THE INTERNATIONAL MECHANICAL CODE GOVERNING THE CONDITIONS, TERMS, SPECIFICATIONS AND CONTROL OF THE DESIGN AND INSTALLATION OF MECHANICAL SYSTEMS WITHIN THE CITY OF LEAWOOD, KANSAS; PROVIDING FOR THE ISSUANCE OF PERMITS AND THE COLLECTION OF FEES THEREFOR; PROVIDING FOR PENALTIES FOR THE VIOLATION THEREOF; AND REPEALING EXISTING ARTICLE OF THE CODE OF THE CITY OF LEAWOOD.

Be it ordained by the Governing Body of the City of Leawood:

Section 1. Code Amended. That Article 5 ("Mechanical Code") of Chapter 4 of the City of Leawood is hereby amended to read as follows:

ARTICLE 5. MECHANICAL CODE

4-501. INTERNATIONAL MECHANICAL CODE ADOPTED. The International Mechanical Code, including all appendices except Appendix B, 1996 edition, as published by the International Code Council, is hereby adopted and incorporated in this chapter as fully as if set forth herein, excepting only such parts or portions thereof as are specifically added or changed in Sections 4-502 through 4-504 of this article. Three copies of this document shall be in file in the Office of the City Clerk.

4-502. INTERNATIONAL MECHANICAL CODE AMENDED; SEC. 106. PERMITS. Sec. 106.4, Permit Issuance. Add the following: All permits shall be posted so as to be visible from the street.

4-503. SAME; SEC. 108. VIOLATIONS. Sec. 108.4, Violation Penalties, is hereby changed to read as follows: Any person who violates a provision of this code or fails to comply with any of the requirements thereof or who erects, constructs, alters, or repairs any mechanical systems in violation of an approved plan or directive of the building official, or of a permit or certificate issued under the provisions of this code, or other references incorporated, is guilty of a public offense, punishable as provided in Section 4-202 of the Code of the City of Leawood.

4-504. SAME; SEC. 108. VIOLATIONS. Sec. 108.5, Stop Work Orders, is hereby changed, so that the last sentence shall read as follows: Any person and/or company who shall continue any work on the system after having been served with a stop work order, except such work as that person and/or company is directed to perform to remove a violation or unsafe condition, shall be liable to a fine of not less than five hundred Dollars ($500.00).

Section 2. Repeal of Existing Article. That existing Article 5 ("Mechanical Code") of Chapter 4 of the Code of the City of Leawood is hereby repealed. (Prior law: Ord. No. 1479C)

Section 3. Validity of Ordinance. That if any section, subsection, sentence, clause or phrase of this ordinance be declared unconstitutional or invalid for any reason, the remainder shall not be thereby affected.

Section 4. Take Effect. That this ordinance shall take effect and be in force on December 1, 1996.

Passed by the Council the 4th day of November, 1996.

Approved by the Mayor the 4th day of November, 1996.

(S E A L)

Marcia Rinehart
Mayor

Attest:

Martha Heizer
City Clerk

APPROVED FOR FORM:

R.S. Wetzler
City Attorney

ORDINANCE NO. 1628

AN ORDINANCE AUTHORIZING AND PROVIDING FOR THE ISSUANCE AND DELIVERY OF TEMPORARY NOTES, PROJECT 160 (MUNICIPAL POOL COMPLEX IMPROVEMENTS), OF THE CITY OF LEAWOOD, KANSAS, IN THE PRINCIPAL AMOUNT OF $500,000 TO PROVIDE TEMPORARY FINANCING OF THE COST OF IMPROVEMENTS TO THE MUNICIPAL POOL COMPLEX IN THE CITY OF LEAWOOD.

WHEREAS, pursuant to K.S.A. 12-1736, et seq., as amended, and Ordinance No. 1527, the Governing Body of the City of Leawood, Kansas (the "City") has heretofore authorized the following described improvement project within the City, to wit: the reconstruction, remodeling, replacement and repair of the pool, bathhouse and related facilities at Leawood Park, 10601 Lee Boulevard, (the "Project") at an estimated cost of $1,196,516; and

WHEREAS, the Project has commenced and the City has incurred or expects to incur costs payable within the next 9 months in the amount of $500,000; and

WHEREAS, the City is authorized by law and in particular K.S.A. 10-123, as amended, to issue temporary notes of the City to pay the costs of the Project as the same become due and payable.

NOW, THEREFORE, BE IT ORDAINED BY THE GOVERNING BODY OF THE CITY OF LEAWOOD, KANSAS, AS FOLLOWS:

Section One. Authorization of Notes. That in order to provide funds to pay the costs of the Project now due or to become due in the immediate future, including necessary engineering, legal and incidental costs, there shall be issued and the City is hereby authorized to issue temporary notes of the City, designated City of Leawood, Kansas, Temporary Notes, Project 160 (Municipal Pool Complex Improvements), in the aggregate principal amount of Five Hundred Thousand Dollars ($500,000) (the "Notes"). The amount of the Notes together with other temporary notes heretofore issued to finance the Project which remain outstanding does not exceed the total estimated costs of said Project.

Section Two. Terms of the Notes. Said issue of Notes shall consist of bearer notes numbered 1 through 5 inclusive, each in the denomination of $100,000. Each of said Notes shall be dated November 11, 1996, shall mature by their stated terms and become due and payable on August 7, 1997. The Notes shall bear interest from their dated date, payable at maturity or upon redemption prior thereto as herein provided, at a rate of interest of 3.72% per annum (computed on the basis of actual days elapsed and a 360-day year composed of

twelve 30-day months). The Notes shall be subject to redemption at the option of the City upon notice as hereinafter provided and shall be redeemed and cancelled contemporaneously with the issuance of general obligation improvement bonds of the City issued in lieu thereof to provide permanent financing of the Project.

Both principal of and interest on said Notes shall be payable in lawful money of the United States of America by check or draft at the office of the City Treasurer of the City upon presentation and surrender of said Notes.

The City reserves the right to redeem and pay said Notes, in whole or in part (and if in part in denominations of $100,000 selected by the City in its sole discretion), at any date prior to the stated maturity of said Notes by notice thereof given in writing by first class mail to the original purchaser of the Notes and to any known holder of the Notes or by the publication of such notice at least one time in a newspaper published or of general circulation in the metropolitan Kansas City area, and payment of said Notes, such publication of such notice or mailing of written notification of redemption to the original purchaser and the known holder to be at least ten days prior to the redemption date fixed in such notice. Notice of such redemption having been given as aforesaid, interest shall cease to accrue on said Notes from and after the redemption date.

Section Three. Security for the Notes. The full faith, credit and resources of the City of Leawood, Kansas, shall be and the same are hereby irrevocably pledged for the prompt payment of the principal of and interest on the Notes.

The Governing Body of the City shall make provisions for the payment of said Notes by the issuance of renewal notes or general obligation bonds of the City to provide permanent financing of the Project upon the completion thereof. If said bonds shall not be so issued and the Notes shall not be so paid, the Governing Body shall levy and collect a tax upon all taxable tangible property within the territorial limits of the City in an amount sufficient to pay the principal of and interest on said Notes as the same become due and payable.

Section Four. Form of Notes. Each of said Notes shall be in customary form as provided by law, shall be signed by the Mayor and attested by the City Clerk of the City and shall have the seal of said City affixed thereto.

Section Five. Execution and Delivery. The Mayor and City Clerk of the City are hereby authorized and directed to prepare and execute the Notes herein authorized in the form and substance hereinbefore described and as provided by law

and to procure the proper registration in the office of the City Clerk and in the office of the Treasurer of the State of Kansas, and when so executed and registered, said Notes shall be countersigned by the City Clerk and delivered to Country Club Bank, the original purchaser thereof, upon payment of the purchase price therefor which shall not be less than 99.77% of the principal amount thereof plus accrued interest to the date of delivery thereof to the original purchaser thereof.

Section Six. Disposition of Proceeds. The proceeds of the sale of said Notes shall be deposited with the City Treasurer in a special fund created for the purpose of paying the costs and expenses of the Project.

Section Seven. Tax Covenants. The City covenants and agrees that (1) it will comply with each and every provision of Section 103 and Sections 141 through 150 of the Internal Revenue Code of 1986, as amended (the "Code"), that is or may become applicable to the Notes, necessary to maintain the exclusion from gross income for federal income tax purposes of the interest on the Notes, including but not limited to any provisions requiring the rebate of earnings on amounts held in funds or accounts created with respect to the Notes and (2) it will not use or permit the use of any of the proceeds of the Notes or other funds of the City nor take or permit any other action, or fail to take any action, if any such action or failure to act would adversely affect the exclusion from gross income for federal income tax purposes of the interest on the Notes; provided, however, the foregoing provision in (1) above shall be and become null and void if and to the extent that the City shall receive an opinion from nationally recognized bond counsel which concludes that compliance with the foregoing covenant and the provisions of the Code as provided in this section shall not be required to maintain and continue the tax-exempt status of the interest income on the Notes.

Section Eight. Further Authority. The duly elected and appointed officers of the City, including the Mayor, the City Clerk and the Finance Director, are hereby further authorized and directed to execute all documents and take such actions as they may deem necessary or advisable in order to carry out and perform the purposes of this Ordinance and to make ministerial alterations, changes or additions in the foregoing agreements, statements, instruments and other documents herein approved, authorized and confirmed which they may approve, and the execution or taking of such action shall be conclusive evidence of such necessity

or advisability.

Section Nine. Effective Date. That this Ordinance shall take effect and be in force after its publication as provided by law.

PASSED by the Council the 4th day of November, 1996.

APPROVED by the Mayor the 4th day of November, 1996.

(SEAL)

Marcia Rinehart, Mayor

ATTEST:

Martha Heizer, City Clerk

APPROVED FOR FORM:

R. S. Wetzler, City Attorney

WII-tnnmo160

ORD1628

Publication Fees: $88.46

The Legal Record
600 E. Santa Fe, Suite 4
Olathe, KS 66061-3700

CITY OF LEAWOOD
ATTN: MARTHA HEIZER
4800 TOWN CENTER DR
LEAWOOD, KS 66211

Proof of Publication

STATE OF KANSAS, JOHNSON COUNTY, SS;
Tammy Schwien, of lawful age, being first duly sworn, deposes and says that she is Legal Notices Administrator of The Legal Record which is a newspaper printed in the State of Kansas, published in and of general paid circulation on a weekly, monthly or yearly basis in Johnson County, Kansas, is not a trade, religious or fraternal publication, is published at least weekly fifty (50) times a year, has been so published continuously and uninterrupted in said County and State for a period of more than five (5) years prior to the first publication of the notice attached, and has been admitted at the post office as second class matter (now called periodicals class).
That a notice was published in all editions of the regular and entire issue for the following subject matter (also identified by the following case number, if any) for 1 consecutive week(s), as follows:

ORDINANCE NO. 1628--11/5/96

Tammy Schwien
Legal Notices Administrator

Subscribed and sworn to before me on this date:
November 6, 1996

Debra Dziadura
Notary Public

DEBRA DZIADURA
Notary Public - State of Kansas

My appointment expires: August 21, 1999.

$88.46

ORDINANCE NO. 1628

First published in The Legal Record, Tuesday, November 5, 1996.

ORDINANCE NO. 1628

AN ORDINANCE AUTHORIZING AND PROVIDING FOR THE ISSUANCE AND DELIVERY OF TEMPORARY NOTES, PROJECT 160 (MUNICIPAL POOL COMPLEX IMPROVEMENTS), OF THE CITY OF LEAWOOD, KANSAS, IN THE PRINCIPAL AMOUNT OF $500,000 TO PROVIDE TEMPORARY FINANCING OF THE COST OF IMPROVEMENTS TO THE MUNICIPAL POOL COMPLEX IN THE CITY OF LEAWOOD.

WHEREAS, pursuant to K.S.A. 12-1736, et seq., as amended, and Ordinance No. 1527, the Governing Body of the City of Leawood, Kansas (the "City") has heretofore authorized the following described improvement project within the City, to wit: the reconstruction, remodeling, replacement and repair of the pool, bathhouse and related facilities at Leawood Park, 10601 Lee Boulevard, (the "Project") at an estimated cost of $1,196,516; and

WHEREAS, the Project has commenced and the City has incurred or expects to incur costs payable within the next 9 months in the amount of $500,000; and

WHEREAS, the City is authorized by law and in particular K.S.A. 10-123, as amended, to issue temporary notes of the City to pay the costs of the Project as the same become due and payable.

NOW, THEREFORE, BE IT ORDAINED BY THE GOVERNING BODY OF THE CITY OF LEAWOOD, KANSAS, AS FOLLOWS:

Section One. Authorization of Notes. That in order to provide funds to pay the costs of the Project now due or to become due in the immediate future, including necessary engineering, legal and incidental costs, there shall be issued and the City is hereby authorized to issue temporary notes of the City, designated City of Leawood, Kansas, Temporary Notes, Project 160 (Municipal Pool Complex Improvements), in the aggregate principal amount of Five Hundred Thousand Dollars ($500,000) (the "Notes"). The amount of the Notes together with other temporary notes heretofore issued to finance the Project which remain outstanding does not exceed the total estimated costs of said Project.

Section Two. Terms of the Notes. Said issue of Notes shall consist of bearer notes numbered 1 through 5 inclusive, each in the denomination of $100,000. Each of said Notes shall be dated November 11, 1996, shall mature by their stated terms and become due and payable on August 7, 1997. The Notes shall bear interest from their dated date, payable at maturity or upon redemption prior thereto as herein provided, at a rate of interest of 3.72% per annum (computed on the basis of actual days elapsed and a 360-day year composed of twelve 30-day months). The Notes shall be subject to redemption at the option of the City upon notice as hereinafter provided and shall be redeemed and cancelled contemporaneously with the issuance of general obligation improvement bonds of the

CONTINUED ON PAGE 25 A

CONTINUED FROM PAGE 24A

City issued in lieu thereof to provide permanent financing of the Project.

Both principal of and interest on said Notes shall be payable in lawful money of the United States of America by check or draft at the office of the City Treasurer of the City upon presentation and surrender of said Notes.

The City reserves the right to redeem and pay said Notes, in whole or in part (and if in part in denominations of $100,000 selected by the City in its sole discretion), at any date prior to the stated maturity of said Notes by notice thereof given in writing by first class mail to the original purchaser of the Notes and to any known holder of the Notes or by the publication of such notice at least one time in a newspaper published or of general circulation in the metropolitan Kansas City area, and payment of said Notes, such publication of such notice or mailing of written notification of redemption to the original purchaser and the known holder to be at least ten days prior to the redemption date fixed in such notice. Notice of such redemption having been given as aforesaid, interest shall cease to accrue on said Notes from and after the redemption date.

Section Three. Security for the Notes. The full faith, credit and resources of the City of Leawood, Kansas, shall be and the same are hereby irrevocably pledged for the prompt payment of the principal of and interest on the Notes.

The Governing Body of the City shall make provisions for the payment of said Notes by the issuance of renewal notes or general obligation bonds of the City to provide permanent financing of the Project upon the completion thereof. If said bonds shall not be so issued and the Notes shall not be so paid, the Governing Body shall levy and collect a tax upon all taxable tangible property within the territorial limits of the City in an amount sufficient to pay the principal of and interest on said Notes as the same become due and payable.

Section Four. Form of Notes. Each of said Notes shall be in customary form as provided by law, shall be signed by the Mayor and attested by the City Clerk of the City and shall have the seal of said City affixed thereto.

Section Five. Execution and Delivery. The Mayor and City Clerk of the City are hereby authorized and directed to prepare and execute the Notes herein authorized in the form and substance hereinbefore described and as provided by law and to procure the proper registration in the office of the City Clerk and in the office of the Treasurer of the State of Kansas, and when so executed and registered, said Notes shall be countersigned by the City Clerk and delivered to Country Club Bank, the original purchaser thereof, upon payment of the purchase price therefor which shall not be less than 99.77% of the principal amount thereof plus accrued interest to the date of delivery thereof to the original purchaser thereof.

Section Six. Disposition of Proceeds. The proceeds of the sale of said Notes shall be deposited with the City Treasurer in a special fund created for the purpose of paying the costs and expenses of the Project.

Section Seven. Tax Covenants. The City covenants and agrees that (1) it will comply with each and every provision of Section 103 and Sections 141 through 150 of the Internal Revenue Code of 1986, as amended (the "Code"), that is or may become applicable to the Notes, necessary to maintain the exclusion from gross income for federal income tax purposes of the interest on the Notes, including but not limited to any provisions requiring the rebate of earnings on amounts held in funds or accounts created with respect to the Notes and (2) it will not use or permit the use of any of the proceeds of the Notes or other funds of the City nor take or permit any other action, or fail to take any action, if any such action or failure to act would adversely affect the exclusion from gross income for federal income tax purposes of the interest on the Notes; provided, however, the foregoing provision in (1) above shall be and become null and void if and to the extent that the City shall receive an opinion from nationally recognized bond counsel which concludes that compliance with the foregoing covenant and the provisions of the Code as provided in this section shall not be required to maintain and continue the tax-exempt status of the interest income on the Notes.

Section Eight. Further Authority. The duly elected and appointed officers of the City, including the Mayor, the City Clerk and the Finance Director, are hereby further authorized and directed to execute all documents and take such actions as they may deem necessary or advisable in order to carry out and perform the purposes of this Ordinance and to make ministerial alterations, changes or additions in the foregoing agreements, statements, instruments and other documents herein approved, authorized and confirmed which they may approve, and the execution or taking of such action shall be conclusive evidence of such necessity or advisability.

Section Nine. Effective Date. That this Ordinance shall take effect and be in force after its publication as provided by law.

PASSED by the Council the 4th day of November, 1996.

APPROVED by the Mayor the 4th day of November, 1996.

(S E A L)

Marcia Rinehart

Marcia Rinehart, Mayor

ATTEST:

Martha Heizer

Martha Heizer, City Clerk

APPROVED FOR FORM:

R.S. Wetzler, City Attorney

WII-tnmmo160

ORDINANCE NO. 1627

AN ORDINANCE AUTHORIZING AND PROVIDING FOR THE ISSUANCE AND DELIVERY OF TEMPORARY NOTES, PROJECT 147 (CITY HALL IMPROVEMENTS), OF THE CITY OF LEAWOOD, KANSAS, IN THE PRINCIPAL AMOUNT OF $1,500,000 TO PROVIDE TEMPORARY FINANCING OF THE COST OF IMPROVEMENTS TO CITY HALL IN THE CITY OF LEAWOOD.

WHEREAS, pursuant to K.S.A. 12-1736, et seq., as amended, and Ordinance No. 1580, the Governing Body of the City of Leawood, Kansas (the "City") has heretofore authorized the following described improvement project within the City, to wit: City Hall improvements at 4800 Town Center Drive to include interior reconstruction, remodeling, and renovation, equipment and furnishings, site improvements and additional parking facilities (the "Project") at an estimated cost of $2,100,000; and

WHEREAS, the Project has commenced and the City has incurred or expects to incur costs payable within the next 9 months in the amount of $1,500,000; and

WHEREAS, the City is authorized by law and in particular K.S.A. 10-123, as amended, to issue temporary notes of the City to pay the costs of the Project as the same become due and payable.

NOW, THEREFORE, BE IT ORDAINED BY THE GOVERNING BODY OF THE CITY OF LEAWOOD, KANSAS, AS FOLLOWS:

Section One. Authorization of Notes. That in order to provide funds to pay the costs of the Project now due or to become due in the immediate future, including necessary engineering, legal and incidental costs, there shall be issued and the City is hereby authorized to issue temporary notes of the City, designated City of Leawood, Kansas, Temporary Notes, Project 147 (City Hall Improvements), in the aggregate principal amount of One Million Five Hundred Thousand Dollars ($1,500,000) (the "Notes"). The amount of the Notes together with other temporary notes heretofore issued to finance the Project which remain outstanding does not exceed the total estimated costs of said Project.

Section Two. Terms of the Notes. Said issue of Notes shall consist of bearer notes numbered 1 through 15 inclusive, each in the denomination of $100,000. Each of said Notes shall be dated November 11, 1996, shall mature by their stated terms and become due and payable on August 7, 1997. The Notes shall bear interest from their dated date, payable at maturity or upon redemption prior thereto as herein provided, at a rate of interest of 3.72% per annum (computed on the basis of actual days elapsed and a 360-day year composed of

twelve 30-day months). The Notes shall be subject to redemption at the option of the City upon notice as hereinafter provided and shall be redeemed and cancelled contemporaneously with the issuance of general obligation improvement bonds of the City issued in lieu thereof to provide permanent financing of the Project.

Both principal of and interest on said Notes shall be payable in lawful money of the United States of America by check or draft at the office of the City Treasurer of the City upon presentation and surrender of said Notes.

The City reserves the right to redeem and pay said Notes, in whole or in part (and if in part in denominations of $100,000 selected by the City in its sole discretion), at any date prior to the stated maturity of said Notes by notice thereof given in writing by first class mail to the original purchaser of the Notes and to any known holder of the Notes or by the publication of such notice at least one time in a newspaper published or of general circulation in the metropolitan Kansas City area, and payment of said Notes, such publication of such notice or mailing of written notification of redemption to the original purchaser and the known holder to be at least ten days prior to the redemption date fixed in such notice. Notice of such redemption having been given as aforesaid, interest shall cease to accrue on said Notes from and after the redemption date.

Section Three. Security for the Notes. The full faith, credit and resources of the City of Leawood, Kansas, shall be and the same are hereby irrevocably pledged for the prompt payment of the principal of and interest on the Notes.

The Governing Body of the City shall make provisions for the payment of said Notes by the issuance of renewal notes or general obligation bonds of the City to provide permanent financing of the Project upon the completion thereof. If said bonds shall not be so issued and the Notes shall not be so paid, the Governing Body shall levy and collect a tax upon all taxable tangible property within the territorial limits of the City in an amount sufficient to pay the principal of and interest on said Notes as the same become due and payable.

Section Four. Form of Notes. Each of said Notes shall be in customary form as provided by law, shall be signed by the Mayor and attested by the City Clerk of the City and shall have the seal of said City affixed thereto.

Section Five. Execution and Delivery. The Mayor and City Clerk of the City are hereby authorized and directed to prepare and execute the Notes herein authorized in the form and substance hereinbefore described and as provided by law

and to procure the proper registration in the office of the City Clerk and in the office of the Treasurer of the State of Kansas, and when so executed and registered, said Notes shall be countersigned by the City Clerk and delivered to Country Club Bank, the original purchaser thereof, upon payment of the purchase price therefor which shall not be less than 99.815% of the principal amount thereof plus accrued interest to the date of delivery thereof to the original purchaser thereof.

Section Six. Disposition of Proceeds. The proceeds of the sale of said Notes shall be deposited with the City Treasurer in a special fund created for the purpose of paying the costs and expenses of the Project.

Section Seven. Tax Covenants. The City covenants and agrees that (1) it will comply with each and every provision of Section 103 and Sections 141 through 150 of the Internal Revenue Code of 1986, as amended (the "Code"), that is or may become applicable to the Notes, necessary to maintain the exclusion from gross income for federal income tax purposes of the interest on the Notes, including but not limited to any provisions requiring the rebate of earnings on amounts held in funds or accounts created with respect to the Notes and (2) it will not use or permit the use of any of the proceeds of the Notes or other funds of the City nor take or permit any other action, or fail to take any action, if any such action or failure to act would adversely affect the exclusion from gross income for federal income tax purposes of the interest on the Notes; provided, however, the foregoing provision in (1) above shall be and become null and void if and to the extent that the City shall receive an opinion from nationally recognized bond counsel which concludes that compliance with the foregoing covenant and the provisions of the Code as provided in this section shall not be required to maintain and continue the tax-exempt status of the interest income on the Notes.

Section Eight. Further Authority. The duly elected and appointed officers of the City, including the Mayor, the City Clerk and the Finance Director, are hereby further authorized and directed to execute all documents and take such actions as they may deem necessary or advisable in order to carry out and perform the purposes of this Ordinance and to make ministerial alterations, changes or additions in the foregoing agreements, statements, instruments and other documents herein approved, authorized and confirmed which they may approve, and the execution or taking of such action shall be conclusive evidence of such necessity

or advisability.

Section Nine. Effective Date. That this Ordinance shall take effect and be in force after its publication as provided by law.

PASSED by the Council the 4th day of November, 1996.

APPROVED by the Mayor the 4th day of November, 1996.

Marcia Rinehart, Mayor

ATTEST:

Martha Heizer, City Clerk

APPROVED FOR FORM:

R. S. Wetzler, City Attorney

WII-tnnmo147

ORD1627

Publication Fees: $88.08

The Legal Record
600 E. Santa Fe, Suite 4
Olathe, KS 66061-3700

CITY OF LEAWOOD
ATTN: MARTHA HEIZER
4800 TOWN CENTER DR
LEAWOOD, KS 66211

Proof of Publication

STATE OF KANSAS, JOHNSON COUNTY, SS;
Tammy Schwien, of lawful age, being first duly sworn, deposes and says that she is Legal Notices Administrator of The Legal Record which is a newspaper printed in the State of Kansas, published in and of general paid circulation on a weekly, monthly or yearly basis in Johnson County, Kansas, is not a trade, religious or fraternal publication, is published at least weekly fifty (50) times a year, has been so published continuously and uninterrupted in said County and State for a period of more than five (5) years prior to the first publication of the notice attached, and has been admitted at the post office as second class matter (now called periodicals class).
That a notice was published in all editions of the regular and entire issue for the following subject matter (also identified by the following case number, if any) for 1 consecutive week(s), as follows:

ORDINANCE NO. 1627--11/5/96

Tammy Schwien
Legal Notices Administrator

Subscribed and sworn to before me on this date:
November 6, 1996

Debra Dziadura
Notary Public

DEBRA DZIADURA
Notary Public - State of Kansas

My appointment expires: August 21, 1999.

$88.08

ORDINANCE NO. 1627

First published in The Legal Record, Tuesday, November 5, 1996.

ORDINANCE NO. 1627

AN ORDINANCE AUTHORIZING AND PROVIDING FOR THE ISSUANCE AND DELIVERY OF TEMPORARY NOTES, PROJECT 147 (CITY HALL IMPROVEMENTS), OF THE CITY OF LEAWOOD, KANSAS, IN THE PRINCIPAL AMOUNT OF $1,500,000 TO PROVIDE TEMPORARY FINANCING OF THE COST OF IMPROVEMENTS TO CITY HALL IN THE CITY OF LEAWOOD.

WHEREAS, pursuant to K.S.A. 12-1736, et seq., as amended, and Ordinance No 1580, the Governing Body of the City of Leawood, Kansas (the "City") has heretofore authorized the following described improvement project within the City, to wit: City Hall improvements at 4800 Town Center Drive to include interior reconstruction, remodeling, and renovation, equipment and furnishings, site improvements and additional parking facilities (the "Project") at an estimated cost of $2,100,000; and

WHEREAS, the Project has commenced and the City has incurred or expects to incur costs payable within the next 9 months in the amount of $1,500,000; and

WHEREAS, the City is authorized by law and in particular K.S.A. 10-123, as amended, to issue temporary notes of the City to pay the costs of the Project as the same become due and payable.

NOW, THEREFORE, BE IT ORDAINED BY THE GOVERNING BODY OF THE CITY OF LEAWOOD, KANSAS, AS FOLLOWS:

Section One. Authorization of Notes. That in order to provide funds to pay the costs of the Project now due or to become due in the immediate future, including necessary engineering, legal and incidental costs, there shall be issued and the City is hereby authorized to issue temporary notes of the City, designated City of Leawood, Kansas, Temporary Notes, Project 147 (City Hall Improvements), in the aggregate principal amount of One Million Five Hundred Thousand Dollars ($1,500,000) (the "Notes"). The amount of the Notes together with other temporary

CONTINUED ON PAGE 26A

CONTINUED FROM PAGE 25 A

notes heretofore issued to finance the Project which remain outstanding does not exceed the total estimated costs of said Project.

Section Two. Terms of the Notes. Said issue of Notes shall consist of bearer notes numbered 1 through 15 inclusive, each in the denomination of $100,000. Each of said Notes shall be dated November 11, 1996, shall mature by their stated terms and become due and payable on August 7, 1997. The Notes shall bear interest from their dated date, payable at maturity or upon redemption prior thereto as herein provided, at a rate of interest of 3.72% per annum (computed on the basis of actual days elapsed and a 360-day year composed of twelve 30-day months). The Notes shall be subject to redemption at the option of the City upon notice as hereinafter provided and shall be redeemed and cancelled contemporaneously with the issuance of general obligation improvement bonds of the City issued in lieu thereof to provide permanent financing of the Project.

Both principal of and interest on said Notes shall be payable in lawful money of the United States of America by check or draft at the office of the City Treasurer of the City upon presentation and surrender of said Notes.

The City reserves the right to redeem and pay said Notes, in whole or in part (and if in part in denominations of $100,000 selected by the City in its sole discretion), at any date prior to the stated maturity of said Notes by notice thereof given in writing by first class mail to the original purchaser of the Notes and to any known holder of the Notes or by the publication of such notice at least one time in a newspaper published or of general circulation in the metropolitan Kansas City area, and payment of said Notes, such publication of such notice or mailing of written notification of redemption to the original purchaser and the known holder to be at least ten days prior to the redemption date fixed in such notice. Notice of such redemption having been given as aforesaid, interest shall cease to accrue on said Notes from and after the redemption date.

Section Three. Security for the Notes. The full faith, credit and resources of the City of Leawood, Kansas, shall be and the same are hereby irrevocably pledged for the prompt payment of the principal of and interest on the Notes.

The Governing Body of the City shall make provisions for the payment of said Notes by the issuance of renewal notes or general obligation bonds of the City to provide permanent financing of the Project upon the completion thereof. If said bonds shall not be so issued and the Notes shall not be so paid, the Governing Body shall levy and collect a tax upon all taxable tangible property within the territorial limits of the City in an amount sufficient to pay the principal of and interest on said Notes as the same become due and payable.

Section Four. Form of Notes. Each of said Notes shall be in customary form as provided by law, shall be signed by the Mayor and attested by the City Clerk of the City and shall have the seal of said City affixed thereto.

Section Five. Execution and Delivery. The Mayor and City Clerk of the City are hereby authorized and directed to prepare and execute the Notes herein authorized in the form and substance hereinbefore described and as provided by law and to procure the proper registration in the office of the City Clerk and in the office of the Treasurer of the State of Kansas; and when so executed and registered, said Notes shall be countersigned by the City Clerk and delivered to Country Club Bank, the original purchaser thereof, upon payment of the purchase price therefor which shall not be less than 99.815% of the principal amount thereof plus accrued interest to the date of delivery thereof to the original purchaser thereof.

Section Six. Disposition of Proceeds. The proceeds of the sale of said Notes shall be deposited with the City Treasurer in a special fund created for the purpose of paying the costs and expenses of the Project.

Section Seven. Tax Covenants. The City covenants and agrees that (1) it will comply with each and every provision of Section 103 and Sections 141 through 150 of the Internal Revenue Code of 1986, as amended (the "Code"), that is or may become applicable to the Notes, necessary to maintain the exclusion from gross income for federal income tax purposes of the interest on the Notes, including but not limited to any provisions requiring the rebate of earnings on amounts held in funds or accounts created with respect to the Notes and (2) it will not use or permit the use of any of the proceeds of the Notes or other funds of the City nor take or permit any other action, or fail to take any action, if any such action or failure to act would adversely affect the exclusion from gross income for federal income tax purposes of the interest on the Notes; provided, however, the foregoing provision in (1) above shall be and become null and void if and to the extent that the City shall receive an opinion from nationally recognized bond counsel which concludes that compliance with the foregoing covenant and the provisions of the Code as provided in this section shall not be required to maintain and continue the tax-exempt status of the interest income on the Notes.

Section Eight. Further Authority. The duly elected and appointed officers of the City, including the Mayor, the City Clerk and the Finance Director, are hereby further authorized and directed to execute all documents and take such actions as they may deem necessary or advisable in order to carry out and perform the purposes of this Ordinance and to make ministerial alterations, changes or additions in the foregoing agreements, statements, instruments and other documents herein approved, authorized and confirmed which they may approve, and the execution or taking of such action shall be conclusive evidence of such necessity or advisability.

Section Nine. Effective Date. That this Ordinance shall take effect and be in force after its publication as provided by law.

PASSED by the Council the 4th day of November, 1996.

APPROVED by the Mayor the 4th day of November, 1996.

(S E A L)

Marcia Rinehart

Marcia Rinehart, Mayor

ATTEST:

Martha Heizer

Martha Heizer, City Clerk

APPROVED FOR FORM:

R. S. Wetzler, City Attorney

WII-tnmmo147

ORDINANCE NO. 1626

AN ORDINANCE AUTHORIZING AND PROVIDING FOR THE ISSUANCE AND DELIVERY OF TEMPORARY NOTES, PROJECT 146 (TOWN CENTER PLAZA), OF THE CITY OF LEAWOOD, KANSAS, IN THE PRINCIPAL AMOUNT OF $3,200,000 TO PROVIDE TEMPORARY FINANCING OF THE COST OF CONSTRUCTION OF 117TH STREET FROM ITS INTERSECTION WITH TOWN CENTER DRIVE WEST TO NALL AVENUE, SIGNALIZATION OF THE INTERSECTIONS OF NALL AND 117TH STREET, 119TH STREET AND HAWTHORNE, TOWN CENTER DRIVE AND ROE AVENUE, TOWN CENTER DRIVE AND NALL AVENUE AND 119TH STREET AT ROSEWOOD, CERTAIN UTILITY MAIN IMPROVEMENTS, BURIAL OF OVERHEAD POWER LINES, THE WIDENING AND UTILITY RELOCATIONS OF NALL AVENUE, 119TH STREET, ROE, AND TOWN CENTER DRIVE FROM ROE TO 117TH STREET, THE WIDENING OF TOWN CENTER DRIVE FROM 117TH STREET TO NALL AVENUE, SIGNALIZATION OF THE INTERSECTION OF TOWN CENTER DRIVE AND 117TH STREET OR TOWN CENTER DRIVE AND LEAWOOD CITY HALL/LEAWOOD LIBRARY, AND THE OVERLAY OF 119TH STREET FROM ROE AVENUE TO NALL AVENUE AND ROE AVENUE FROM TOWN CENTER DRIVE TO 119TH STREET IN THE CITY OF LEAWOOD.

WHEREAS, pursuant to K.S.A. 12-6a01, et seq., as amended, and Resolution No. 1238, the Governing Body of the City of Leawood, Kansas (the "City") has heretofore authorized the following described improvement project within the City, to wit: construction of 117th Street from its intersection with Town Center Drive west to Nall Avenue; signalization of various intersections (as hereinbefore outlined); certain utility main improvements, burial of overhead power lines; widening and utility relocations of various streets (as hereinbefore outlined); and the overlay of 119th Street from Roe Avenue to Nall Avenue and Roe Avenue from Town Center Drive to 119th Street (the "Project") at an estimated cost of $4,100,000; and

WHEREAS, the Project has been commenced and the City has heretofore issued its Temporary Notes, Project 146 (Town Center Plaza), dated March 1, 1996, in the principal amount of $3,200,000 (the "Prior Notes") to provide funds to pay the costs of the Project heretofore incurred by the City; and

WHEREAS, said Prior Notes become due and payable in the immediate future but all aspects of the Project will not be completed at the date of maturity thereof; and

WHEREAS, the City is authorized by law and in particular K.S.A. 10-123, as amended, to issue temporary notes of the City to provide funds to redeem and pay the Prior Notes as the same become due and payable.

NOW, THEREFORE, BE IT ORDAINED BY THE GOVERNING BODY OF THE CITY OF LEAWOOD, KANSAS, AS FOLLOWS:

Section One. Authorization of Notes. That in order to provide funds to redeem and pay the Prior Notes to become due in the immediate future, there shall be issued and the City is hereby authorized to issue temporary notes of the City, designated City of Leawood, Kansas, Temporary Notes, Project 146 (Town Center Plaza), in the aggregate principal amount of Three Million Two Hundred Thousand Dollars ($3,200,000) (the "Notes"). The amount of the Notes together with other temporary notes heretofore issued to finance the Project which remain outstanding does not exceed the total estimated costs of said Project.

Section Two. Terms of the Notes. Said issue of Notes shall consist of bearer notes numbered 1 through 32 inclusive, each in the denomination of $100,000. Each of said Notes shall be dated November 11, 1996, shall mature by their stated terms and become due and payable on August 7, 1997. The Notes shall bear interest from their dated date, payable at maturity or upon redemption prior thereto as herein provided, at a rate of interest of 3.80% per annum (computed on the basis of actual days elapsed and a 360-day year composed of twelve 30-day months). The Notes shall be subject to redemption at the option of the City upon notice as hereinafter provided and shall be redeemed and cancelled contemporaneously with the issuance of general obligation improvement bonds of the City issued in lieu thereof to provide permanent financing of the Project.

Both principal of and interest on said Notes shall be payable in lawful money of the United States of America by check or draft at the office of the City Treasurer of the City upon presentation and surrender of said Notes.

The City reserves the right to redeem and pay said Notes, in whole or in part (and if in part in denominations of $100,000 selected by the City in its sole discretion), at any date prior to the stated maturity of said Notes by notice thereof given in writing by first class mail to the original purchaser of the Notes and to any known holder of the Notes or by the publication of such notice at least one time in a newspaper published or of general circulation in the metropolitan Kansas City area, and payment of said Notes, such publication of such notice or mailing of written notification of redemption to the original purchaser and the known holder to be at least ten days prior to the redemption date fixed in such notice. Notice of such redemption having been given as aforesaid,

interest shall cease to accrue on said Notes from and after the redemption date.

Section Three. Security for the Notes. The full faith, credit and resources of the City of Leawood, Kansas, shall be and the same are hereby irrevocably pledged for the prompt payment of the principal of and interest on the Notes.

The Governing Body of the City shall make provisions for the payment of said Notes by the issuance of renewal notes or general obligation bonds of the City to provide permanent financing of the Project upon the completion thereof. If said bonds shall not be so issued and the Notes shall not be so paid, the Governing Body shall levy and collect special assessments on property benefitted by the Project, and to the extent said special assessments shall not be so collected, the Governing Body shall levy and collect a tax upon all taxable tangible property within the territorial limits of the City in an amount sufficient to pay the principal of and interest on said Notes as the same become due and payable.

Section Four. Form of Notes. Each of said Notes shall be in customary form as provided by law, shall be signed by the Mayor and attested by the City Clerk of the City and shall have the seal of said City affixed thereto.

Section Five. Execution and Delivery. The Mayor and City Clerk of the City are hereby authorized and directed to prepare and execute the Notes herein authorized in the form and substance hereinbefore described and as provided by law and to procure the proper registration in the office of the City Clerk and in the office of the Treasurer of the State of Kansas, and when so executed and registered, said Notes shall be countersigned by the City Clerk and delivered to United Missouri Bank, the original purchaser thereof, upon payment of the purchase price therefor which shall not be less than 99.617% of the principal amount thereof plus accrued interest to the date of delivery thereof to the original purchaser thereof.

Section Six. Disposition of Proceeds. The proceeds of the sale of the Notes shall be deposited with the City Treasurer to be used to redeem and retire the Prior Notes; and

Section Seven. Tax Covenants. The City covenants and agrees that (1) it will comply with each and every provision of Section 103 and Sections 141 through 150 of the Internal Revenue Code of 1986, as amended (the "Code"), that is or may become applicable to the Notes, necessary to maintain the exclusion from gross income for federal income tax purposes of the interest on the Notes, including but

not limited to any provisions requiring the rebate of earnings on amounts held in funds or accounts created with respect to the Notes and (2) it will not use or permit the use of any of the proceeds of the Notes or other funds of the City nor take or permit any other action, or fail to take any action, if any such action or failure to act would adversely affect the exclusion from gross income for federal income tax purposes of the interest on the Notes; provided, however, the foregoing provision in (1) above shall be and become null and void if and to the extent that the City shall receive an opinion from nationally recognized bond counsel which concludes that compliance with the foregoing covenant and the provisions of the Code as provided in this section shall not be required to maintain and continue the tax-exempt status of the interest income on the Notes.

Section Eight. Further Authority. The duly elected and appointed officers of the City, including the Mayor, the City Clerk and the Finance Director, are hereby further authorized and directed to execute all documents and take such actions as they may deem necessary or advisable in order to carry out and perform the purposes of this Ordinance and to make ministerial alterations, changes or additions in the foregoing agreements, statements, instruments and other documents herein approved, authorized and confirmed which they may approve, and the execution or taking of such action shall be conclusive evidence of such necessity or advisability.

Section Nine. Effective Date. That this Ordinance shall take effect and be in force after its publication as provided by law.

PASSED by the Council the 4th day of November, 1996.

APPROVED by the Mayor the 4th day of November, 1996.

(SEAL)

Marcia Rinehart

Marcia Rinehart, Mayor

ATTEST:

Martha Heizer

Martha Heizer, City Clerk

APPROVED FOR FORM:

R. S. Wetzler, City Attorney

WII-tnr146

ORD1626

Publication Fees: $97.48

The Legal Record
600 E. Santa Fe, Suite 4
Olathe, KS 66061-3700

CITY OF LEAWOOD
ATTN: MARTHA HEIZER
4800 TOWN CENTER DR
LEAWOOD, KS 66211

Proof of Publication

STATE OF KANSAS, JOHNSON COUNTY, SS;
Tammy Schwien, of lawful age, being first duly sworn, deposes and says that she is Legal Notices Administrator of The Legal Record which is a newspaper printed in the State of Kansas, published in and of general paid circulation on a weekly, monthly or yearly basis in Johnson County, Kansas, is not a trade, religious or fraternal publication, is published at least weekly fifty (50) times a year, has been so published continuously and uninterrupted in said County and State for a period of more than five (5) years prior to the first publication of the notice attached, and has been admitted at the post office as second class matter (now called periodicals class).
That a notice was published in all editions of the regular and entire issue for the following subject matter (also identified by the following case number, if any) for 1 consecutive week(s), as follows:

ORDINANCE NO. 1626--11/5/96

Tammy Schwien
Legal Notices Administrator

Subscribed and sworn to before me on this date:
November 6, 1996

Debra Dziadura
Notary Public

DEBRA DZIADURA
Notary Public - State of Kansas

My appointment expires: August 21, 1999.

$97.48

ORDINANCE NO. 1626

First published in The Legal Record, Tuesday, November 5, 1996.

ORDINANCE NO. 1626

AN ORDINANCE AUTHORIZING AND PROVIDING FOR THE ISSUANCE AND DELIVERY OF TEMPORARY NOTES, PROJECT 146 (TOWN CENTER PLAZA), OF THE CITY OF LEAWOOD, KANSAS, IN THE PRINCIPAL AMOUNT OF $3,200,000 TO PROVIDE TEMPORARY FINANCING OF THE COST OF CONSTRUCTION OF 117TH STREET FROM ITS INTERSECTION WITH TOWN CENTER DRIVE WEST TO NALL AVENUE, SIGNALIZATION OF THE INTERSECTIONS OF NALL AND 117TH STREET, 119TH STREET AND HAWTHORNE, TOWN CENTER DRIVE AND ROE AVENUE, TOWN CENTER DRIVE AND NALL AVENUE AND 119TH STREET AT ROSEWOOD, CERTAIN UTILITY MAIN IMPROVEMENTS, BURIAL OF OVERHEAD POWER LINES, THE WIDENING AND UTILITY RELOCATIONS OF NALL AVENUE, 119TH STREET, ROE, AND TOWN CENTER DRIVE FROM ROE TO 117TH STREET, THE WIDENING OF TOWN CENTER DRIVE FROM 117TH STREET TO NALL AVENUE, SIGNALIZATION OF THE INTERSECTION OF TOWN CENTER DRIVE AND 117TH STREET OR TOWN CENTER DRIVE AND LEAWOOD CITY HALL/LEAWOOD LIBRARY, AND THE OVERLAY OF 119TH STREET FROM ROE AVENUE TO NALL AVENUE AND ROE AVENUE FROM TOWN CENTER DRIVE TO 119TH STREET IN THE CITY OF LEAWOOD.

WHEREAS, pursuant to K.S.A. 12-6a01, et seq., as amended, and Resolution No. 1238, the Governing Body of the City of Leawood, Kansas (the "City") has heretofore authorized the following described improvement project within the City, to wit: construction of 117th Street from its intersection with Town Center Drive west to Nall Avenue; signalization of various intersections (as hereinbefore outlined); certain utility main improvements, burial of overhead power lines; widening and utility relocations of various streets (as hereinbefore outlined); and the overlay of 119th Street from Roe Avenue to Nall Avenue and Roe Avenue from Town Center Drive to 119th Street (the "Project") at an estimated cost of $4,100,000; and

WHEREAS, the Project has been commenced and the City has heretofore issued its Temporary Notes, Project 146 (Town Center Plaza), dated March 1, 1996, in the principal amount of $3,200,000 (the "Prior Notes") to provide funds to pay the costs of the Project heretofore incurred by the City; and

WHEREAS, said Prior Notes become due and payable in the immediate future but all aspects of the Project will not be completed at the date of maturity thereof,

CONTINUED ON PAGE 32 A

CONTINUED FROM PAGE 31 A

and

WHEREAS, the City is authorized by law and in particular K.S.A. 10-123, as amended, to issue temporary notes of the City to provide funds to redeem and pay the Prior Notes as the same become due and payable.

NOW, THEREFORE, BE IT ORDAINED BY THE GOVERNING BODY OF THE CITY OF LEAWOOD, KANSAS, AS FOLLOWS:

Section One. Authorization of Notes. That in order to provide funds to redeem and pay the Prior Notes to become due in the immediate future, there shall be issued and the City is hereby authorized to issue temporary notes of the City, designated City of Leawood, Kansas, Temporary Notes, Project 146 (Town Center Plaza), in the aggregate principal amount of Three Million Two Hundred Thousand Dollars ($3,200,000) (the "Notes"). The amount of the Notes together with other temporary notes heretofore issued to finance the Project which remain outstanding does not exceed the total estimated costs of said Project.

Section Two. Terms of the Notes. Said issue of Notes shall consist of bearer notes numbered 1 through 32 inclusive, each in the denomination of $100,000. Each of said Notes shall be dated November 11, 1996, shall mature by their stated terms and become due and payable on August 7, 1997. The Notes shall bear interest from their dated date, payable at maturity or upon redemption prior thereto as herein provided, at a rate of interest of 3.80% per annum (computed on the basis of actual days elapsed and a 360-day year composed of twelve 30-day months). The Notes shall be subject to redemption at the option of the City upon notice as hereinafter provided and shall be redeemed and cancelled contemporaneously with the issuance of general obligation improvement bonds of the City issued in lieu thereof to provide permanent financing of the Project.

Both principal of and interest on said Notes shall be payable in lawful money of the United States of America by check or draft at the office of the City Treasurer of the City upon presentation and surrender of said Notes.

The City reserves the right to redeem and pay said Notes, in whole or in part (and if in part in denominations of $100,000 selected by the City in its sole discretion), at any date prior to the stated maturity of said Notes by notice thereof given in writing by first class mail to the original purchaser of the Notes and to any known holder of the Notes or by the publication of such notice at least one time in a newspaper published or of general circulation in the metropolitan Kansas City area, and payment of said Notes, such publication of such notice or mailing of written notification of redemption to the original purchaser and the known holder to be at least ten days prior to the redemption date fixed in such notice. Notice of such redemption having been given as aforesaid, interest shall cease to accrue on said Notes from and after the redemption date.

Section Three. Security for the Notes. The full faith, credit and resources of the City of Leawood, Kansas, shall be and the same are hereby irrevocably pledged for the prompt payment of the principal of and interest on the Notes.

The Governing Body of the City shall make provisions for the payment of said Notes by the issuance of renewal notes or general obligation bonds of the City to provide permanent financing of the Project upon the completion thereof. If said bonds shall not be so issued and the Notes shall not be so paid, the Governing Body shall levy and collect special assessments on property benefitted by the Project, and to the extent said special assessments shall not be so collected, the Governing Body shall levy and collect a tax upon all taxable tangible property within the territorial limits of the City in an amount sufficient to pay the principal of and interest on said Notes as the same become due and payable.

Section Four. Form of Notes. Each of said Notes shall be in customary form as provided by law, shall be signed by the Mayor and attested by the City Clerk of the City and shall have the seal of said City affixed thereto.

Section Five. Execution and Delivery. The Mayor and City Clerk of the City are hereby authorized and directed to prepare and execute the Notes herein authorized in the form and substance hereinbefore described and as provided by law and to procure the proper registration in the office of the City Clerk and in the office of the Treasurer of the State of Kansas, and when so executed and registered, said Notes shall be countersigned by the City Clerk and delivered to United Missouri Bank, the original purchaser thereof, upon payment of the purchase price therefor which shall not be less than 99.617% of the principal amount thereof plus accrued interest to the date of delivery thereof to the original purchaser thereof.

Section Six. Disposition of Proceeds. The proceeds of the sale of the Notes shall be deposited with the City Treasurer to be used to redeem and retire the Prior Notes; and

Section Seven. Tax Covenants. The City covenants and agrees that (1) it will comply with each and every provision of Section 103 and Sections 141 through 150 of the Internal Revenue Code of 1986, as amended (the "Code"), that is or may become applicable to the Notes, necessary to maintain the exclusion from gross income for federal income tax purposes of the interest on the Notes, including but not limited to any provisions requiring the rebate of earnings on amounts held in funds or accounts created with respect to the Notes and (2) it will not use or permit the use of any of the proceeds of the Notes or other funds of the City nor take or permit any other action, or fail to take any action, if any such action or failure to act would adversely affect the exclusion from gross income for federal income tax purposes of the interest on the Notes; provided, however, the foregoing provision in (1) above shall be and become null and void if and to the extent that the City shall receive an opinion from nationally recognized bond counsel which concludes that compliance with the foregoing covenant and the provisions of the Code as provided in this section shall not be required to maintain and continue the tax-exempt status of the interest income on the Notes.

Section Eight. Further Authority. The duly elected and appointed officers of the City, including the Mayor, the City Clerk and the Finance Director, are hereby further authorized and directed to execute all documents and take such actions as they may deem necessary or advisable in order to carry out and perform the purposes of this Ordinance and to make ministerial alterations, changes or additions in the foregoing agreements, statements, instruments and other documents herein approved, authorized and confirmed which they may approve, and the execution or taking of such action shall be conclusive evidence of such necessity or advisability.

Section Nine. Effective Date. That this Ordinance shall take effect and be in force after its publication as provided by law.

PASSED by the Council the 4th day of November, 1996.

APPROVED by the Mayor the 4th day of November, 1996.

(S E A L)

Marcia Rinehart

Marcia Rinehart, Mayor

ATTEST:

Martha Heizer

Martha Heizer, City Clerk

APPROVED FOR FORM:

R. S. Wetzler, City Attorney

WII-tnr146

ORDINANCE NO. 1625

AN ORDINANCE AUTHORIZING AND PROVIDING FOR THE ISSUANCE AND DELIVERY OF TEMPORARY NOTES, PROJECT 144 (MISSION ROAD, 103RD - I-435), OF THE CITY OF LEAWOOD, KANSAS, IN THE AMOUNT OF $700,000 TO PROVIDE TEMPORARY FINANCING OF THE COST OF IMPROVEMENT OR REIMPROVEMENT OF MISSION ROAD, 103RD - I-435, INCLUDING GRADING, REGRADING, CURBING, RECURBING, GUTTERING, REGUTTERING, PAVING, REPAVING, MACADAMIZING, REMACADAMIZING, CONSTRUCTING, RECONSTRUCTING, OPENING, WIDENING, EXTENDING, ROUNDING CORNERS, STRAIGHTENING, RELOCATING, CONSTRUCTION OR RECONSTRUCTION OF ANY NECESSARY BRIDGES AND APPROACHES THERETO, VIADUCTS, OVERPASSES, UNDER-PASSES, CULVERTS, STORM DRAINAGE, TRAFFICWAY ILLUMINATION, TRAFFIC CONTROL DEVICES, PEDESTRIAN WAYS, BICYCLE WAYS OR OTHER IMPROVEMENTS AND OTHER INCIDENTAL CONSTRUCTION COSTS, IN THE CITY OF LEAWOOD.

WHEREAS, pursuant to K.S.A. 12-685, et seq., as amended, and Ordinance No. 1204, the Governing Body of the City of Leawood, Kansas (the "City") has heretofore authorized the following described improvement project within the City, to wit: improvement of certain sections of Mission Road from 103rd Street to I-435 within the City of Leawood (the "Project") at an estimated cost of $2,000,000; and

WHEREAS, the Project has been commenced and the City has heretofore issued its Temporary Notes, Project 144 (Mission Road, 103rd - I-435), dated March 1, 1996, in the principal amount of $200,000 (the "Prior Notes") to provide funds to pay the costs of the Project heretofore incurred by the City; and

WHEREAS, the Prior Notes become due and payable in the immediate future but all aspects of the Project will not be completed at the date of maturity thereof, and the City has incurred or expects to incur additional costs payable within the next 9 months in the amount of $500,000; and

WHEREAS, the City is authorized by law and in particular K.S.A. 10-123, as amended, to issue temporary notes of the City to provide funds to redeem and pay the Prior Notes and to pay the costs of the Project as the same become due and payable.

NOW, THEREFORE, BE IT ORDAINED BY THE GOVERNING BODY OF THE CITY OF LEAWOOD, KANSAS, AS FOLLOWS:

Section One. Authorization of Notes. That in order to provide funds to redeem and pay the Prior Notes and to pay the costs of the Project now due or to become due in the immediate future, including necessary engineering, legal and incidental costs, there shall be issued and the City is hereby authorized to issue temporary notes of the City, designated City of Leawood, Kansas, Temporary Notes, Project 144 (Mission Road, 103rd - I-435), in the aggregate principal amount of Seven Hundred Thousand Dollars ($700,000) (the "Notes"). The amount of the Notes together with other temporary notes heretofore issued to finance the Project which remain outstanding does not exceed the total estimated costs of said Project.

Section Two. Terms of the Notes. Said issue of Notes shall consist of bearer notes numbered 1 through 7 inclusive, each in the denomination of $100,000. Each of said Notes shall be dated November 11, 1996, shall mature by their stated terms and become due and payable on August 7, 1997. The Notes shall bear interest from their dated date, payable at maturity or upon redemption prior thereto as herein provided, at a rate of interest of 3.72% per annum (computed on the basis of actual days elapsed and a 360-day year composed of twelve 30-day months). The Notes shall be subject to redemption at the option of the City upon notice as hereinafter provided and shall be redeemed and cancelled contemporaneously with the issuance of general obligation improvement bonds of the City issued in lieu thereof to provide permanent financing of the Project.

Both principal of and interest on said Notes shall be payable in lawful money of the United States of America by check or draft at the office of the City Treasurer of the City upon presentation and surrender of said Notes.

The City reserves the right to redeem and pay said Notes, in whole or in part (and if in part in denominations of $100,000 selected by the City in its sole discretion), at any date prior to the stated maturity of said Notes by notice thereof given in writing by first class mail to the original purchaser of the Notes and to any known holder of the Notes or by the publication of such notice at least one time in a newspaper published or of general circulation in the metropolitan Kansas City area, and payment

of said Notes, such publication of such notice or mailing of written notification of redemption to the original purchaser and the known holder to be at least ten days prior to the redemption date fixed in such notice. Notice of such redemption having been given as aforesaid, interest shall cease to accrue on said Notes from and after the redemption date.

Section Three. Security for the Notes. The full faith, credit and resources of the City of Leawood, Kansas, shall be and the same are hereby irrevocably pledged for the prompt payment of the principal of and interest on the Notes.

The Governing Body of the City shall make provisions for the payment of said Notes by the issuance of renewal notes or general obligation bonds of the City to provide permanent financing of the Project upon the completion thereof. If said bonds shall not be so issued and the Notes shall not be so paid, the Governing Body shall levy and collect a tax upon all taxable tangible property within the territorial limits of the City in an amount sufficient to pay the principal of and interest on said Notes as the same become due and payable.

Section Four. Form of Notes. Each of said Notes shall be in customary form as provided by law, shall be signed by the Mayor and attested by the City Clerk of the City and shall have the seal of said City affixed thereto.

Section Five. Execution and Delivery. The Mayor and City Clerk of the City are hereby authorized and directed to prepare and execute the Notes herein authorized in the form and substance hereinbefore described and as provided by law and to procure the proper registration in the office of the City Clerk and in the office of the Treasurer of the State of Kansas, and when so executed and registered, said Notes shall be countersigned by the City Clerk and delivered to Country Club Bank, the original purchaser thereof, upon payment of the purchase price therefor which shall not be less than 99.73% of the principal amount thereof plus accrued interest to the date of delivery thereof to the original purchaser thereof.

Section Six. Disposition of Proceeds. The proceeds of the sale of

the Notes shall be deposited with the City Treasurer. The sum of $200,000 of such proceeds shall be used to redeem and retire the Prior Notes, and the balance of such proceeds shall be deposited in a special fund created for the purpose of paying the costs and expenses of the Project.

Section Seven. Tax Covenants. The City covenants and agrees that (1) it will comply with each and every provision of Section 103 and Sections 141 through 150 of the Internal Revenue Code of 1986, as amended (the "Code"), that is or may become applicable to the Notes, necessary to maintain the exclusion from gross income for federal income tax purposes of the interest on the Notes, including but not limited to any provisions requiring the rebate of earnings on amounts held in funds or accounts created with respect to the Notes and (2) it will not use or permit the use of any of the proceeds of the Notes or other funds of the City nor take or permit any other action, or fail to take any action, if any such action or failure to act would adversely affect the exclusion from gross income for federal income tax purposes of the interest on the Notes; provided, however, the foregoing provision in (1) above shall be and become null and void if and to the extent that the City shall receive an opinion from nationally recognized bond counsel which concludes that compliance with the foregoing covenant and the provisions of the Code as provided in this section shall not be required to maintain and continue the tax-exempt status of the interest income on the Notes.

Section Eight. Further Authority. The duly elected and appointed officers of the City, including the Mayor, the City Clerk and the Finance Director, are hereby further authorized and directed to execute all documents and take such actions as they may deem necessary or advisable in order to carry out and perform the purposes of this Ordinance and to make ministerial alterations, changes or additions in the foregoing agreements, statements, instruments and other documents herein approved, authorized and confirmed which they may approve, and the execution or taking of such action shall be conclusive evidence of such necessity or advisability.

Section Nine. Effective Date. That this Ordinance shall take effect and be in force after its publication as provided by law.

PASSED by the Council the 4th day of November, 1996.

APPROVED by the Mayor the 4th day of November, 1996.

Marcia Rinehart, Mayor

ATTEST:

Martha Heizer, City Clerk

APPROVED FOR FORM:

R. S. Wetzler, City Attorney

WII:tnnmr144

ORD1625

Publication Fees: $101.51

The Legal Record
600 E. Santa Fe, Suite 4
Olathe, KS 66061-3700

CITY OF LEAWOOD
ATTN: MARTHA HEIZER
4800 TOWN CENTER DR
LEAWOOD, KS 66211

Proof of Publication

STATE OF KANSAS, JOHNSON COUNTY, SS;
Tammy Schwien, of lawful age, being first duly sworn, deposes and says that she is Legal Notices Administrator of The Legal Record which is a newspaper printed in the State of Kansas, published in and of general paid circulation on a weekly, monthly or yearly basis in Johnson County, Kansas, is not a trade, religious or fraternal publication, is published at least weekly fifty (50) times a year, has been so published continuously and uninterrupted in said County and State for a period of more than five (5) years prior to the first publication of the notice attached, and has been admitted at the post office as second class matter (now called periodicals class).
That a notice was published in all editions of the regular and entire issue for the following subject matter (also identified by the following case number, if any) for 1 consecutive week(s), as follows:

ORDINANCE NO. 1625--11/5/96

Tammy Schwien
Legal Notices Administrator

Subscribed and sworn to before me on this date:
November 6, 1996

Notary Public

DEBRA DZIADURA
Notary Public - State of Kansas

My appointment expires: August 21, 1999.

$101.51

ORDINANCE NO. 1625

First published in The Legal Record, Tuesday, November 5, 1996.

ORDINANCE NO. 1625

AUTHORIZING AND PROVIDING FOR THE ISSUANCE AND DELIVERY OF
TES, PROJECT 144 (MISSION ROAD, 103RD - I-435), OF THE CITY OF
NSAS, IN THE AMOUNT OF $700,000 TO PROVIDE TEMPORARY
THE COST OF IMPROVEMENT OR REIMPROVEMENT OF MISSION ROAD,
, INCLUDING GRADING, REGRADING, CURBING, RECURBING, GUTTERING,
PAVING, REPAVING, MACADAMIZING, REMACADAMIZING,
CONSTRUCTING, RECONSTRUCTING, OPENING, WIDENING, EXTENDING, ROUNDING CORNERS, STRAIGHTENING, RELOCATING, CONSTRUCTION OR RECONSTRUCTION OF ANY NECESSARY BRIDGES AND APPROACHES THERETO, VIADUCTS, OVERPASSES, UNDERPASSES, CULVERTS, STORM DRAINAGE, TRAFFICWAY ILLUMINATION, TRAFFIC CONTROL DEVICES, PEDESTRIAN WAYS, BICYCLE WAYS OR OTHER IMPROVEMENTS AND OTHER INCIDENTAL CONSTRUCTION COSTS, IN THE CITY OF LEAWOOD.

WHEREAS, pursuant to K.S.A. 12-689, et seq., as amended, and Ordinance No. 1204, the Governing Body of the City of Leawood, Kansas (the "City") has heretofore authorized the following described improvement project within the City, to wit: improvement of certain sections of Mission Road from 103rd Street to I-435 within the City of Leawood (the "Project") at an estimated cost of $2,000,000; and

WHEREAS, the Project has been commenced and the City has heretofore issued its Temporary Notes, Project 144 (Mission Road, 103rd - I-435), dated March 1, 1996, in the principal amount of $200,000 (the "Prior Notes") to provide funds to pay the costs of the Project heretofore incurred by the City; and

WHEREAS, the Prior Notes become due and payable in the immediate future but all aspects of the Project will not be completed at the date of maturity thereof, and the City has incurred or expects to incur additional costs payable within the next 9 months in the amount of $500,000; and

WHEREAS, the City is authorized by law and in particular K.S.A. 10-123, as amended, to issue temporary notes of the City to provide funds to redeem and pay the Prior Notes and to pay the costs of the Project as the same become due and payable.

NOW, THEREFORE, BE IT ORDAINED BY THE GOVERNING BODY OF THE CITY OF LEAWOOD, KANSAS, AS FOLLOWS:

Section One. Authorization of Notes. That in order to provide funds to redeem and pay the Prior Notes and to pay the costs of the Project now due or to become due in the immediate future, including necessary engineering, legal and incidental costs, there shall be issued and the City is hereby authorized to issue temporary notes of the City, designated City of Leawood, Kansas, Temporary Notes, Project 144 (Mission Road, 103rd - I-435), in the aggregate principal amount of Seven Hundred Thousand Dollars ($700,000) (the "Notes"). The amount of the Notes together with other temporary notes heretofore issued to finance the Project which remain outstanding does not exceed the total estimated costs of said Project.

Section Two. Terms of the Notes. Said issue of Notes shall consist of bearer notes numbered 1 through 7 inclusive, each in the denomination of $100,000. Each of said Notes shall be dated November 11, 1996, shall mature by their stated terms and become due and payable on August 7, 1997. The Notes shall bear interest from their dated date, payable at maturity or upon redemption prior thereto as herein provided, at a rate of interest of 3.72% per annum (computed on the basis of actual days elapsed and a 360-day year composed of twelve 30-day months). The Notes shall be subject to redemption at the option of the City upon notice as hereinafter provided and shall be redeemed and cancelled contemporaneously with the issuance of general obligation improvement bonds of the City issued in lieu thereof to provide permanent financing of the Project.

Both principal of and interest on said Notes shall be payable in lawful money of the United States of America by check or draft at the office of the City Treasurer of the City upon presentation and surrender of said Notes.

The City reserves the right to redeem and pay said Notes, in whole or in part (and if in part in denominations of $100,000 selected by the City in its sole discretion), at any date prior to the stated maturity of said

CONTINUED ON PAGE 31 A

CONTINUED FROM PAGE 30 A

Notes by notice thereof given in writing by first class mail to the original purchaser of the Notes and to any known holder of the Notes or by the publication of such notice at least one time in a newspaper published or of general circulation in the metropolitan Kansas City area, and payment of said Notes, such publication of such notice or mailing of written notification of redemption to the original purchaser and the known holder to be at least ten days prior to the redemption date fixed in such notice. Notice of such redemption having been given as aforesaid, interest shall cease to accrue on said Notes from and after the redemption date.

Section Three. Security for the Notes. The full faith, credit and resources of the City of Leawood, Kansas, shall be and the same are hereby irrevocably pledged for the prompt payment of the principal of and interest on the Notes.

The Governing Body of the City shall make provisions for the payment of said Notes by the issuance of renewal notes or general obligation bonds of the City to provide permanent financing of the Project upon the completion thereof. If said bonds shall not be so issued and the Notes shall not be so paid, the Governing Body shall levy and collect a tax upon all taxable tangible property within the territorial limits of the City in an amount sufficient to pay the principal of and interest on said Notes as the same become due and payable.

Section Four. Form of Notes. Each of said Notes shall be in customary form as provided by law, shall be signed by the Mayor and attested by the City Clerk of the City and shall have the seal of said City affixed thereto.

Section Five. Execution and Delivery. The Mayor and City Clerk of the City are hereby authorized and directed to prepare and execute the Notes herein authorized in the form and substance hereinbefore described and as provided by law and to procure the proper registration in the office of the City Clerk and in the office of the Treasurer of the State of Kansas, and when so executed and registered, said Notes shall be countersigned by the City Clerk and delivered to Country Club Bank, the original purchaser thereof, upon payment of the purchase price therefor which shall not be less than 99.73% of the principal amount thereof plus accrued interest to the date of delivery thereof to the original purchaser thereof.

Section Six. Disposition of Proceeds. The proceeds of the sale of the Notes shall be deposited with the City Treasurer. The sum of $200,000 of such proceeds shall be used to redeem and retire the Prior Notes, and the balance of such proceeds shall be deposited in a special fund created for the purpose of paying the costs and expenses of the Project.

Section Seven. Tax Covenants. The City covenants and agrees that (1) it will comply with each and every provision of Section 103 and Sections 141 through 150 of the Internal Revenue Code of 1986, as amended (the "Code"), that is or may become applicable to the Notes, necessary to maintain the exclusion from gross income for federal income tax purposes of the interest on the Notes, including but not limited to any provisions requiring the rebate of earnings on amounts held in funds or accounts created with respect to the Notes and (2) it will not use or permit the use of any of the proceeds of the Notes or other funds of the City nor take or permit any other action, or fail to take any action, if any such action or failure to act would adversely affect the exclusion from gross income for federal income tax purposes of the interest on the Notes; provided, however, the foregoing provision in (1) above shall be and become null and void if and to the extent that the City shall receive an opinion from nationally recognized bond counsel which concludes that compliance with the foregoing covenant and the provisions of the Code as provided in this section shall not be required to maintain and continue the tax-exempt status of the interest income on the Notes.

Section Eight. Further Authority. The duly elected and appointed officers of the City, including the Mayor, the City Clerk and the Finance Director, are hereby further authorized and directed to execute all documents and take such actions as they may deem necessary or advisable in order to carry out and perform the purposes of this Ordinance and to make ministerial alterations, changes or additions in the foregoing agreements, statements, instruments and other documents herein approved, authorized and confirmed which they may approve, and the execution or taking of such action shall be conclusive evidence of such necessity or advisability.

Section Nine. Effective Date. That this Ordinance shall take effect and be in force after its publication as provided by law.

PASSED by the Council the 4th day of November, 1996.

APPROVED by the Mayor the 4th day of November, 1996.

(S E A L)

Marcia Rinehart, Mayor

ATTEST:

Martha Heizer, City Clerk

APPROVED FOR FORM:

R. S. Wetzler, City Attorney

WII:tnnmr144

ORDINANCE NO. 1624

AN ORDINANCE AUTHORIZING AND PROVIDING FOR THE ISSUANCE AND DELIVERY OF TEMPORARY NOTES, PROJECT 140 (83RD STREET), OF THE CITY OF LEAWOOD, KANSAS, IN THE PRINCIPAL AMOUNT OF $1,600,000 TO PROVIDE TEMPORARY FINANCING OF THE COST OF IMPROVEMENT OR REIMPROVEMENT OF 83RD STREET, INCLUDING GRADING, REGRADING, CURBING, RECURBING, GUTTERING, REGUTTERING, PAVING, REPAVING, MACADAMIZING, REMACADAMIZING, CONSTRUCTING, RECONSTRUCTING, OPENING, WIDENING, EXTENDING, ROUNDING CORNERS, STRAIGHTENING, RELOCATING, CONSTRUCTION OR RECONSTRUCTION OF ANY NECESSARY BRIDGES AND APPROACHES THERETO, VIADUCTS, OVERPASSES, UNDERPASSES, CULVERTS, STORM DRAINAGE, TRAFFICWAY ILLUMINATION, TRAFFIC CONTROL DEVICES, PEDESTRIAN WAYS, BICYCLE WAYS OR OTHER IMPROVEMENTS AND OTHER INCIDENTAL CONSTRUCTION COSTS, IN THE CITY OF LEAWOOD.

WHEREAS, pursuant to K.S.A. 12-685, et seq., as amended, and Ordinance No. 1424, the Governing Body of the City of Leawood, Kansas (the "City") has heretofore authorized the following described improvement project within the City, to wit: improvement of 83rd Street beginning at a point on the Kansas/Missouri state line which is the centerline of 83rd Street and 111.18 feet east of the center line of State Line Road; thence west along the centerline of 83rd Street to a point on the west corporate city limit, said point being approximately 650.10 feet west of the centerline of Wenonga Road (south), within the City of Leawood (the "Project") at an estimated cost of $3,095,816.00; and

WHEREAS, the Project has been commenced and the City has heretofore issued its Temporary Notes, Project 140 (83rd Street), dated March 1, 1996, in the principal amount of $1,600,000 (the "Prior Notes") to provide funds to pay the costs of the Project heretofore incurred by the City; and

WHEREAS, said Prior Notes become due and payable in the immediate future but all aspects of the Project will not be completed at the date of maturity thereof; and

WHEREAS, the City is authorized by law and in particular K.S.A. 10-123, as amended, to issue temporary notes of the City to provide funds to redeem and pay the Prior Notes as the same become due and payable.

NOW, THEREFORE, BE IT ORDAINED BY THE GOVERNING BODY OF THE CITY OF LEAWOOD, KANSAS, AS FOLLOWS:

Section One. Authorization of Notes. That in order to provide funds to redeem and pay the Prior Notes to become due in the immediate future there shall

be issued and the City is hereby authorized to issue temporary notes of the City, designated City of Leawood, Kansas, Temporary Notes, Project 140 (83rd Street), in the aggregate principal amount of One Million Six Hundred Thousand Dollars ($1,600,000) (the "Notes"). The amount of the Notes together with other temporary notes heretofore issued to finance the Project which remain outstanding does not exceed the total estimated costs of said Project.

Section Two. Terms of the Notes. Said issue of Notes shall consist of bearer notes numbered 1 through 16 inclusive, each in the denomination of $100,000. Each of said Notes shall be dated November 11, 1996, shall mature by their stated terms and become due and payable on August 7, 1997. The Notes shall bear interest from their dated date, payable at maturity or upon redemption prior thereto as herein provided, at a rate of interest of 3.80% per annum (computed on the basis of actual days elapsed and a 360-day year composed of twelve 30-day months). The Notes shall be subject to redemption at the option of the City upon notice as hereinafter provided and shall be redeemed and cancelled contemporaneously with the issuance of general obligation improvement bonds of the City issued in lieu thereof to provide permanent financing of the Project.

Both principal of and interest on said Notes shall be payable in lawful money of the United States of America by check or draft at the office of the City Treasurer of the City upon presentation and surrender of said Notes.

The City reserves the right to redeem and pay said Notes, in whole or in part (and if in part in denominations of $100,000 selected by the City in its sole discretion), at any date prior to the stated maturity of said Notes by notice thereof given in writing by first class mail to the original purchaser of the Notes and to any known holder of the Notes or by the publication of such notice at least one time in a newspaper published or of general circulation in the metropolitan Kansas City area, and payment of said Notes, such publication of such notice or mailing of written notification of redemption to the original purchaser and the known holder to be at least ten days prior to the redemption date fixed in such notice. Notice of such redemption having been given as aforesaid, interest shall cease to accrue on said Notes from and after the redemption date.

Section Three. Security for the Notes. The full faith, credit and resources of the City of Leawood, Kansas, shall be and the same are hereby irrevocably pledged for the prompt payment of the principal of and interest on the Notes.

The Governing Body of the City shall make provisions for the payment of said Notes by the issuance of renewal notes or general obligation bonds of the City to provide permanent financing of the Project upon the completion thereof. If said bonds shall not be so issued and the Notes shall not be so paid, the Governing Body shall levy and collect a tax upon all taxable tangible property within the territorial limits of the City in an amount sufficient to pay the principal of and interest on said Notes as the same become due and payable.

Section Four. Form of Notes. Each of said Notes shall be in customary form as provided by law, shall be signed by the Mayor and attested by the City Clerk of the City and shall have the seal of said City affixed thereto.

Section Five. Execution and Delivery. The Mayor and City Clerk of the City are hereby authorized and directed to prepare and execute the Notes herein authorized in the form and substance hereinbefore described and as provided by law and to procure the proper registration in the office of the City Clerk and in the office of the Treasurer of the State of Kansas, and when so executed and registered, said Notes shall be countersigned by the City Clerk and delivered to United Missouri Bank, the original purchaser thereof, upon payment of the purchase price therefor which shall not be less than 99.762% of the principal amount thereof plus accrued interest to the date of delivery thereof to the original purchaser thereof.

Section Six. Disposition of Proceeds. The proceeds of the sale of the Notes shall be deposited with the City Treasurer to be used to redeem and retire the Prior Notes.

Section Seven. Tax Covenants. The City covenants and agrees that (1) it will comply with each and every provision of Section 103 and Sections 141 through 150 of the Internal Revenue Code of 1986, as amended (the "Code"), that is or may become applicable to the Notes, necessary to maintain the exclusion from gross income for federal income tax purposes of the interest on the Notes, including but not limited to any provisions requiring the rebate of earnings on amounts held in funds or accounts created with respect to the Notes and (2) it will not use or permit the use of any of the proceeds of the Notes or other funds of the City nor take or permit any other action, or fail to take any action, if any such action or failure to act would adversely affect the exclusion from gross income for federal income tax purposes of the interest on the Notes; provided, however, the foregoing

provision in (1) above shall be and become null and void if and to the extent that the City shall receive an opinion from nationally recognized bond counsel which concludes that compliance with the foregoing covenant and the provisions of the Code as provided in this section shall not be required to maintain and continue the tax-exempt status of the interest income on the Notes.

Section Eight. Further Authority. The duly elected and appointed officers of the City, including the Mayor, the City Clerk and the Finance Director, are hereby further authorized and directed to execute all documents and take such actions as they may deem necessary or advisable in order to carry out and perform the purposes of this Ordinance and to make ministerial alterations, changes or additions in the foregoing agreements, statements, instruments and other documents herein approved, authorized and confirmed which they may approve, and the execution or taking of such action shall be conclusive evidence of such necessity or advisability.

Section Nine. Effective Date. That this Ordinance shall take effect and be in force after its publication as provided by law.

PASSED by the Council the 4th day of November, 1996.

APPROVED by the Mayor the 4th day of November, 1996.

(SEAL)

Marcia Rinehart

Marcia Rinehart, Mayor

ATTEST:

Martha Heizer

Martha Heizer, City Clerk

APPROVED FOR FORM:

R. S. Wetzler, City Attorney

WII-tnr140

ORD1624

Publication Fees: $94.41

The Legal Record
600 E. Santa Fe, Suite 4
Olathe, KS 66061-3700

CITY OF LEAWOOD
ATTN: MARTHA HEIZER
4800 TOWN CENTER DR
LEAWOOD, KS 66211

Proof of Publication

STATE OF KANSAS, JOHNSON COUNTY, SS;
Tammy Schwien, of lawful age, being first duly sworn, deposes and says that she is Legal Notices Administrator of The Legal Record which is a newspaper printed in the State of Kansas, published in and of general paid circulation on a weekly, monthly or yearly basis in Johnson County, Kansas, is not a trade, religious or fraternal publication, is published at least weekly fifty (50) times a year, has been so published continuously and uninterrupted in said County and State for a period of more than five (5) years prior to the first publication of the notice attached, and has been admitted at the post office as second class matter (now called periodicals class).
That a notice was published in all editions of the regular and entire issue for the following subject matter (also identified by the following case number, if any) for 1 consecutive week(s), as follows:

ORDINANCE NO. 1624--11/5/96

Tammy Schwien
Legal Notices Administrator

Subscribed and sworn to before me on this date:
November 6, 1996

Debra Dziadura
Notary Public

DEBRA DZIADURA
Notary Public - State of Kansas

My appointment expires: August 21, 1999.

$94.41

ORDINANCE NO. 1624

First published in The Legal Record, Tuesday, November 5, 1996.

ORDINANCE NO. 1624

AN ORDINANCE AUTHORIZING AND PROVIDING FOR THE ISSUANCE AND DELIVERY OF TEM-
ARY NOTES, PROJECT 140 (83RD STREET), OF THE CITY OF LEAWOOD, KANSAS, IN THE
NCIPAL AMOUNT OF $1,600,000 TO PROVIDE TEMPORARY FINANCING OF THE COST OF
'ROVEMENT OR REIMPROVEMENT OF 83RD STREET, INCLUDING GRADING, REGRADING,
RBING, RECURBING, GUTTERING, REGUTTERING, PAVING, REPAVING, MACADAMIZING,
MACADAMIZING, CONSTRUCTING, RECONSTRUCTING, OPENING, WIDENING, EXTENDING,
UNDING CORNERS, STRAIGHTENING, RELOCATING, CONSTRUCTION OR RECONSTRUCTION OF ANY
CESSARY BRIDGES AND APPROACHES THERETO, VIADUCTS, OVERPASSES, UNDERPASSES,
ILVERTS, STORM DRAINAGE, TRAFFICWAY ILLUMINATION, TRAFFIC CONTROL DEVICES,
DESTRIAN WAYS, BICYCLE WAYS OR OTHER IMPROVEMENTS AND OTHER INCIDENTAL
ONSTRUCTION COSTS, IN THE CITY OF LEAWOOD.

WHEREAS, pursuant to K.S.A. 12-685, et seq., as amended, and Ordinance No. 424, the Governing Body of the City of Leawood, Kansas (the "City") has heretofore authorized the following described improvement project within the City, to wit: improvement of 83rd Street beginning at a point on the Kansas/Missouri state line which is the centerline of 83rd Street and 111.18 feet east of the center line of State Line Road; thence west along the centerline of 83rd Street to a point on the west corporate city limit, said point being approximately 650.10 feet west of the centerline of Wenonga Road (south), within the City of Leawood (the "Project") at an estimated cost of $3,095,816.00; and

WHEREAS, the Project has been commenced and the City has heretofore issued its Temporary Notes, Project 140 (83rd Street), dated March 1, 1996, in the principal amount of $1,600,000 (the "Prior Notes") to provide funds to pay the costs of the Project heretofore incurred by the City; and

WHEREAS, said Prior Notes become due and payable in the immediate future but all aspects of the Project will not be completed at the date of maturity thereof; and

WHEREAS, the City is authorized by law and in particular K.S.A. 10-123, as amended, to issue temporary notes of the City to provide funds to redeem and pay the Prior Notes as the same become due and payable.

NOW, THEREFORE, BE IT ORDAINED BY THE GOVERNING BODY OF THE CITY OF LEAWOOD, KANSAS, AS FOLLOWS:

Section One. Authorization of Notes. That in order to provide funds to redeem and pay the Prior Notes to become due in the immediate future there shall be issued and the City is hereby authorized to issue temporary notes of the City, designated City of Leawood, Kansas, Temporary Notes, Project 140 (83rd Street), in the aggregate principal amount of One Million Six Hundred Thousand Dollars ($1,600,000) (the "Notes"). The amount of the Notes together with other temporary notes heretofore issued to finance the Project which remain outstanding does not exceed the total estimated costs of said Project.

Section Two. Terms of the Notes. Said issue of Notes shall consist of bearer notes numbered 1 through 16 inclusive, each in the denomination of $100,000. Each of said Notes shall be dated November 11, 1996, shall mature by their stated terms and become due and payable on August 7, 1997. The Notes shall bear interest from their dated date, payable at maturity or upon redemption prior thereto as herein provided, at a rate of interest of 3.80% per annum (computed on the basis of actual days elapsed and a 360-day year composed of twelve 30-day months). The Notes shall be subject to redemption at the option of the City upon notice as hereinafter provided and shall be redeemed and cancelled contemporaneously with the issuance of general obligation improvement bonds of the City issued in lieu thereof to provide permanent financing of the Project.

Both principal of and interest on said Notes shall be payable in lawful money of the United States of America by check or draft at the office of the City Treasurer of the City upon presentation and surrender of said Notes.

The City reserves the right to redeem and pay said Notes, in whole or in part (and if in part in denominations of $100,000 selected by the City in its sole discretion), at any date prior to the stated maturity of said Notes by notice thereof given in writing by first class mail to the original purchaser of the Notes and to any known holder of the Notes or by the publication of such notice at least one time in a newspaper published or of general circulation in the metropolitan Kansas City area, and payment of said Notes, such publication of such notice or mailing of written notification of redemption to the original purchaser and the known holder to be at least ten days prior to the redemption date fixed in such notice. Notice of such redemption having been given as aforesaid, interest shall cease to accrue on said Notes from and after the redemption date.

Section Three. Security for the Notes. The full faith, credit and resources of the City of Leawood, Kansas, shall be and the same are hereby irrevocably pledged for the prompt payment of the principal of and interest on the Notes.

The Governing Body of the City shall make provisions for the payment of said Notes by the issuance of renewal notes or general obligation bonds of the City to provide permanent financing of the Project upon the completion thereof. If said bonds shall not be so issued and the Notes shall not be so paid, the Governing Body shall levy and collect a tax upon all taxable tangible property within the territorial limits of the City in an amount sufficient to pay the principal of and interest on said Notes as the same become due and payable.

Section Four. Form of Notes. Each of said Notes shall be in customary form as provided by law, shall be signed by the Mayor and attested by the City Clerk of the City and shall have the seal of said City affixed thereto.

Section Five. Execution and Delivery. The Mayor and City Clerk of the City are hereby authorized and directed to prepare and execute the Notes herein authorized in the form and substance hereinbefore described and as provided by law and to procure the proper registration in the office of the City Clerk and in the office of the Treasurer of the State of Kansas, and when so executed and registered, said Notes shall be countersigned by the City Clerk and delivered to

CONTINUED ON PAGE 30A

CONTINUED FROM PAGE 29 A

United Missouri Bank, the original purchaser thereof, upon payment of the purchase price therefor which shall not be less than 99.762% of the principal amount thereof plus accrued interest to the date of delivery thereof to the original purchaser thereof.

Section Six. Disposition of Proceeds. The proceeds of the sale of the Notes shall be deposited with the City Treasurer to be used to redeem and retire the Prior Notes.

Section Seven. Tax Covenants. The City covenants and agrees that (1) it will comply with each and every provision of Section 103 and Sections 141 through 150 of the Internal Revenue Code of 1986, as amended (the "Code"), that is or may become applicable to the Notes, necessary to maintain the exclusion from gross income for federal income tax purposes of the interest on the Notes, including but not limited to any provisions requiring the rebate of earnings on amounts held in funds or accounts created with respect to the Notes and (2) it will not use or permit the use of any of the proceeds of the Notes or other funds of the City nor take or permit any other action, or fail to take any action, if any such action or failure to act would adversely affect the exclusion from gross income for federal income tax purposes of the interest on the Notes: provided, however, the foregoing provision in (1) above shall be and become null and void if and to the extent that the City shall receive an opinion from nationally recognized bond counsel which concludes that compliance with the foregoing covenant and the provisions of the Code as provided in this section shall not be required to maintain and continue the tax-exempt status of the interest income on the Notes.

Section Eight. Further Authority. The duly elected and appointed officers of the City, including the Mayor, the City Clerk and the Finance Director, are hereby further authorized and directed to execute all documents and take such actions as they may deem necessary or advisable in order to carry out and perform the purposes of this Ordinance and to make ministerial alterations, changes or additions in the foregoing agreements, statements, instruments and other documents herein approved, authorized and confirmed which they may approve, and the execution or taking of such action shall be conclusive evidence of such necessity or advisability.

Section Nine. Effective Date. That this Ordinance shall take effect and be in force after its publication as provided by law.

PASSED by the Council the 4th day of November, 1996.

APPROVED by the Mayor the 4th day of November, 1996.

(S E A L)

Marcia Rinehart

Marcia Rinehart, Mayor

ATTEST:

Martha Heizer

Martha Heizer, City Clerk

APPROVED FOR FORM:

R. S. Wetzler, City Attorney

WII-tnr140

ORDINANCE NO. 1623

AN ORDINANCE AUTHORIZING AND PROVIDING FOR THE ISSUANCE AND DELIVERY OF TEMPORARY NOTES, PROJECT 131 (NALL AVENUE, 119TH-135TH STREET), OF THE CITY OF LEAWOOD, KANSAS, IN THE PRINCIPAL AMOUNT OF $400,000 TO PROVIDE TEMPORARY FINANCING OF THE COST OF IMPROVEMENT OR REIMPROVEMENT OF NALL AVENUE, 119TH-135TH STREET, INCLUDING GRADING, REGRADING, CURBING, RECURBING, GUTTERING, REGUTTERING, PAVING, REPAVING, MACADAMIZING, REMACADAMIZING, CONSTRUCTING, RECONSTRUCTING, OPENING, WIDENING, EXTENDING, ROUNDING CORNERS, STRAIGHTENING, RELOCATING, CONSTRUCTION OR RECONSTRUCTION OF ANY NECESSARY BRIDGES AND APPROACHES THERETO, VIADUCTS, OVERPASSES, UNDERPASSES, CULVERTS, STORM DRAINAGE, TRAFFICWAY ILLUMINATION, TRAFFIC CONTROL DEVICES, PEDESTRIAN WAYS, BICYCLE WAYS OR OTHER IMPROVEMENTS AND OTHER INCIDENTAL CONSTRUCTION COSTS, IN THE CITY OF LEAWOOD.

WHEREAS, pursuant to K.S.A. 12-685, et seq., as amended, and Ordinance No. 1433, the Governing Body of the City of Leawood, Kansas (the "City") has heretofore authorized the following described improvement project within the City, to wit: improvement of Nall Avenue beginning at a point on the west line of Section 28-13-25, 2651 feet north of the centerline of 135th Street said point being the common city limit lines of Leawood, Kansas, and Overland Park, Kansas; thence north 3985 feet along the west line of Section 28-13-25 and Section 21-13-25 to a point on the common city limit lines of Leawood, Kansas, and Overland Park, Kansas, said point being 3997 feet south of the centerline of 119th Street, within the City of Leawood (the "Project") at an estimated cost of $7,604,683; and

WHEREAS, the Project has been commenced and the City has heretofore issued its Temporary Notes, Project 131 (Nall Avenue, 119th-135th Street), dated March 1, 1996, in the principal amount of $300,000 (the "Prior Notes") to provide funds to pay the costs of the Project heretofore incurred by the City; and

WHEREAS, the Prior Notes become due and payable in the immediate future but all aspects of the Project will not be completed at the date of maturity thereof, and the City has incurred or expects to incur additional costs payable within the next 9 months in the amount of $100,000; and

WHEREAS, the City is authorized by law and in particular K.S.A. 10-123, as amended, to issue temporary notes of the City to provide funds to redeem and pay the Prior Notes and to pay the costs of the Project as the same become due and payable.

NOW, THEREFORE, BE IT ORDAINED BY THE GOVERNING BODY OF THE CITY OF LEAWOOD, KANSAS, AS FOLLOWS:

Section One. Authorization of Notes. That in order to provide funds to redeem and pay the Prior Notes and to pay costs of the Project now due or to become due in the immediate future, including necessary engineering, legal and incidental costs, there shall be issued and the City is hereby authorized to issue temporary notes of the City, designated City of Leawood, Kansas, Temporary Notes, Project 131 (Nall Avenue, 119th-135th Street), in the aggregate principal amount of Four Hundred Thousand Dollars ($400,000) (the "Notes"). The amount of the Notes together with other temporary notes heretofore issued to finance the Project which remain outstanding does not exceed the total estimated costs of said Project.

Section Two. Terms of the Notes. Said issue of Notes shall consist of bearer notes numbered 1 through 4 inclusive, each in the denomination of $100,000. Each of said Notes shall be dated November 11, 1996, shall mature by their stated terms and become due and payable on August 7, 1997. The Notes shall bear interest from their dated date, payable at maturity or upon redemption prior thereto as herein provided, at a rate of interest of 3.80% per annum (computed on the basis of actual days elapsed and a 360-day year composed of twelve 30-day months). The Notes shall be subject to redemption at the option of the City upon notice as hereinafter provided and shall be redeemed and cancelled contemporaneously with the issuance of general obligation improvement bonds of the City issued in lieu thereof to provide permanent financing of the Project.

Both principal of and interest on said Notes shall be payable in lawful money of the United States of America by check or draft at the office of the City Treasurer of the City upon presentation and surrender of said Notes.

The City reserves the right to redeem and pay said Notes, in whole or in part (and if in part in denominations of $100,000 selected by the City in its sole discretion), at any date prior to the stated maturity of said Notes by notice thereof given in writing by first class mail to the original purchaser of the Notes and to any known holder of the Notes or by the publication of such notice at least one time in a newspaper published or of general circulation in the metropolitan Kansas City area, and payment of said Notes, such publication of such notice or mailing of written notification of redemption to the original purchaser

and the known holder to be at least ten days prior to the redemption date fixed in such notice. Notice of such redemption having been given as aforesaid, interest shall cease to accrue on said Notes from and after the redemption date.

Section Three. Security for the Notes. The full faith, credit and resources of the City of Leawood, Kansas, shall be and the same are hereby irrevocably pledged for the prompt payment of the principal of and interest on the Notes.

The Governing Body of the City shall make provisions for the payment of said Notes by the issuance of renewal notes or general obligation bonds of the City to provide permanent financing of the Project upon the completion thereof. If said bonds shall not be so issued and the Notes shall not be so paid, the Governing Body shall levy and collect a tax upon all taxable tangible property within the territorial limits of the City in an amount sufficient to pay the principal of and interest on said Notes as the same become due and payable.

Section Four. Form of Notes. Each of said Notes shall be in customary form as provided by law, shall be signed by the Mayor and attested by the City Clerk of the City and shall have the seal of said City affixed thereto.

Section Five. Execution and Delivery. The Mayor and City Clerk of the City are hereby authorized and directed to prepare and execute the Notes herein authorized in the form and substance hereinbefore described and as provided by law and to procure the proper registration in the office of the City Clerk and in the office of the Treasurer of the State of Kansas, and when so executed and registered, said Notes shall be countersigned by the City Clerk and delivered to United Missouri Bank, the original purchaser thereof, upon payment of the purchase price therefor which shall not be less than 99.885% of the principal amount thereof plus accrued interest to the date of delivery thereof to the original purchaser thereof.

Section Six. Disposition of Proceeds. The proceeds of the sale of the Notes shall be deposited with the City Treasurer. The sum of $300,000 of such proceeds shall be used to redeem and retire the Prior Notes, and the balance of such proceeds shall be deposited in a special fund created for the purpose of paying costs and expenses of the Project.

Section Seven. Tax Covenants. The City covenants and agrees that (1) it will comply with each and every provision of Section 103 and Sections 141 through 150 of the Internal Revenue Code of 1986, as amended (the "Code"), that is or may

become applicable to the Notes, necessary to maintain the exclusion from gross income for federal income tax purposes of the interest on the Notes, including but not limited to any provisions requiring the rebate of earnings on amounts held in funds or accounts created with respect to the Notes and (2) it will not use or permit the use of any of the proceeds of the Notes or other funds of the City nor take or permit any other action, or fail to take any action, if any such action or failure to act would adversely affect the exclusion from gross income for federal income tax purposes of the interest on the Notes; provided, however, the foregoing provision in (1) above shall be and become null and void if and to the extent that the City shall receive an opinion from nationally recognized bond counsel which concludes that compliance with the foregoing covenant and the provisions of the Code as provided in this section shall not be required to maintain and continue the tax-exempt status of the interest income on the Notes.

Section Eight. Further Authority. The duly elected and appointed officers of the City, including the Mayor, the City Clerk and the Finance Director, are hereby further authorized and directed to execute all documents and take such actions as they may deem necessary or advisable in order to carry out and perform the purposes of this Ordinance and to make ministerial alterations, changes or additions in the foregoing agreements, statements, instruments and other documents herein approved, authorized and confirmed which they may approve, and the execution or taking of such action shall be conclusive evidence of such necessity or advisability.

Section Nine. Effective Date. That this Ordinance shall take effect and be in force after its publication as provided by law.

PASSED by the Council the 4th day of November, 1996.

APPROVED by the Mayor the 4th day of November, 1996.

(SEAL)

Marcia Rinehart

Marcia Rinehart, Mayor

ATTEST:

Martha Heizer

Martha Heizer, City Clerk

APPROVED FOR FORM:

R. S. Wetzler, City Attorney

WII-tnnmr131

ORD1623

Publication Fees: $97.48

The Legal Record
600 E. Santa Fe, Suite 4
Olathe, KS 66061-3700

CITY OF LEAWOOD
ATTN: MARTHA HEIZER
4800 TOWN CENTER DR
LEAWOOD, KS 66211

Proof of Publication

STATE OF KANSAS, JOHNSON COUNTY, SS;
Tammy Schwien, of lawful age, being first duly sworn, deposes and says that she is Legal Notices Administrator of The Legal Record which is a newspaper printed in the State of Kansas, published in and of general paid circulation on a weekly, monthly or yearly basis in Johnson County, Kansas, is not a trade, religious or fraternal publication, is published at least weekly fifty (50) times a year, has been so published continuously and uninterrupted in said County and State for a period of more than five (5) years prior to the first publication of the notice attached, and has been admitted at the post office as second class matter (now called periodicals class).
That a notice was published in all editions of the regular and entire issue for the following subject matter (also identified by the following case number, if any) for 1 consecutive week(s), as follows:

ORDINANCE NO. 1623--11/5/96

Tammy Schwien
Legal Notices Administrator

Subscribed and sworn to before me on this date:
November 6, 1996

Debra Dziadura
Notary Public

DEBRA DZIADURA
Notary Public - State of Kansas

My appointment expires: August 21, 1999.

$97.48

ORDINANCE NO. 1623

First published in The Legal Record, Tuesday, November 5, 1996.

ORDINANCE NO. 1623

AN ORDINANCE AUTHORIZING AND PROVIDING FOR THE ISSUANCE AND DELIVERY OF TEMPORARY NOTES, PROJECT 131 (NALL AVENUE, 119TH-135TH STREET), OF THE CITY OF LEAWOOD, KANSAS, IN THE PRINCIPAL AMOUNT OF $400,000 TO PROVIDE TEMPORARY FINANCING OF THE COST OF IMPROVEMENT OR REIMPROVEMENT OF NALL AVENUE, 119TH-135TH STREET, INCLUDING GRADING, REGRADING, CURBING, RECURBING, GUTTERING, REGUTTERING, PAVING, REPAVING, MACADAMIZING, REMACADAMIZING, CONSTRUCTING, RECONSTRUCTING, OPENING, WIDENING, EXTENDING, ROUNDING CORNERS, STRAIGHTENING, RELOCATING, CONSTRUCTION OR RECONSTRUCTION OF ANY NECESSARY BRIDGES AND APPROACHES THERETO, VIADUCTS, OVERPASSES, UNDERPASSES, CULVERTS, STORM DRAINAGE, TRAFFICWAY ILLUMINATION, TRAFFIC CONTROL DEVICES, PEDESTRIAN WAYS, BICYCLE WAYS OR OTHER IMPROVEMENTS AND OTHER INCIDENTAL CONSTRUCTION COSTS, IN THE CITY OF LEAWOOD.

WHEREAS, pursuant to K.S.A. 12-685, et seq., as amended, and Ordinance No. 1433, the Governing Body of the City of Leawood, Kansas (the "City") has heretofore authorized the following described improvement project within the City, to wit: improvement of Nall Avenue beginning at a point on the west line of Section 28-13-25, 2651 feet north of the centerline of 135th Street said point being the common city limit lines of Leawood, Kansas, and Overland Park, Kansas; thence north 3985 feet along the west line of Section 28-13-25 and Section 21-13-25 to a point on the common city limit lines of Leawood, Kansas, and Overland Park, Kansas, said point being 3997 feet south of the centerline of 119th Street, within the City of Leawood (the "Project") at an estimated cost of $7,604,683; and

WHEREAS, the Project has been commenced and the City has heretofore issued its Temporary Notes, Project 131 (Nall Avenue, 119th-135th Street), dated March 1, 1996, in the principal amount of $300,000 (the "Prior Notes") to provide funds to pay the costs of the Project heretofore incurred by the City; and

WHEREAS, the Prior Notes become due and payable in the immediate future but all aspects of the Project will not be completed at the date of maturity thereof, and the City has incurred or expects to incur additional costs payable within the next 9 months in the amount of $100,000; and

WHEREAS, the City is authorized by law and in particular K.S.A. 10-123, as amended, to issue temporary notes of the City to provide funds to redeem and pay the Prior Notes and to pay the costs of the Project as the same become due and payable.

NOW, THEREFORE, BE IT ORDAINED BY THE GOVERNING BODY OF THE CITY OF LEAWOOD, KANSAS, AS FOLLOWS:

Section One. Authorization of Notes. That in order to provide funds to redeem and pay the Prior Notes and to pay costs of the Project now due or to become due in the immediate future, including necessary engineering, legal and incidental costs, there shall be issued and the City is hereby authorized to issue temporary notes of the City, designated City of Leawood, Kansas, Temporary Notes, Project 131 (Nall Avenue, 119th-135th Street), in the aggregate principal amount of Four Hundred Thousand Dollars ($400,000) (the "Notes"). The amount of the Notes together with other temporary notes heretofore issued to finance the Project which remain outstanding does not exceed the total estimated costs of said Project.

Section Two. Terms of the Notes. Said issue of Notes shall consist of bearer notes numbered 1 through 4 inclusive, each in the denomination of $100,000. Each of said Notes shall be dated November 11, 1996, shall mature by their stated terms and become due and payable on August 7, 1997. The Notes shall bear interest from their dated date, payable at maturity or upon redemption prior thereto as herein provided, at a rate of interest of 3.80% per annum (computed on the basis of actual days elapsed and a 360-day year composed of twelve 30-day months). The Notes shall be subject to redemption at the option of the City upon notice as hereinafter provided and shall be redeemed and cancelled contemporaneously with the issuance of general obligation improvement bonds of the City issued in lieu thereof to provide permanent financing of the Project.

Both principal of and interest on said Notes shall be payable in lawful money of the United States of America by check or draft at the office of the City Treasurer of the City upon presentation and surrender of said Notes.

The City reserves the right to redeem and pay said Notes, in whole or in part (and if in part in denominations of $100,000 selected by the City in its sole discretion), at any date prior to the stated maturity of said Notes by notice thereof given in writing by first class mail to the original purchaser of the Notes and to any known holder of the Notes or by the publication of such notice at least one time in a newspaper published or of general circulation in the metropolitan Kansas City area, and payment of said Notes, such publication of such notice or mailing of written notification of redemption to the original purchaser and the known holder to be at least ten days prior to the redemption date fixed in such notice. Notice of such redemption having been given as aforesaid, interest shall cease to accrue on said Notes from and after the redemption date.

Section Three. Security for the Notes. The full faith, credit and resources of the City of Leawood, Kansas, shall be and the same are hereby irrevocably pledged for the prompt payment of the principal of and interest on the Notes.

The Governing Body of the City shall make provisions for the payment of said Notes by the issuance of renewal notes or general obligation bonds of the City to provide permanent financing of the Project upon the completion thereof. If said bonds shall not be so issued and the Notes shall not be so paid, the Governing Body shall levy and collect a tax upon all taxable tangible property within the territorial limits of the City in an amount sufficient to pay the principal of and interest on said Notes as the same become due and payable.

Section Four. Form of Notes. Each of said Notes shall be in customary form as provided by law, shall be signed by the Mayor and attested by the City Clerk of the City and shall have the seal of said City affixed thereto.

Section Five. Execution and Delivery. The Mayor and City Clerk of the City are hereby authorized and directed to prepare and execute the Notes herein authorized in the form and substance hereinbefore described and as provided by law and to procure the proper registration in the office of the City Clerk and in the office of the Treasurer of the State of Kansas, and when so executed and registered, said Notes shall be countersigned by the City Clerk and delivered to United Missouri Bank, the original purchaser thereof, upon payment of the purchase price therefor which shall not be less than 99.885% of the principal amount thereof plus accrued interest to the date of delivery thereof to the original purchaser thereof.

Section Six. Disposition of Proceeds. The proceeds of the sale of the Notes shall be deposited with the City Treasurer. The sum of $300,000 of such proceeds shall be used to redeem and retire the Prior Notes, and the balance of such proceeds shall be deposited in a special fund created for the purpose of paying costs and expenses of the Project.

Section Seven. Tax Covenants. The City covenants and agrees that (1) it will comply with each and every provision of Section 103 and Sections 141 through 150 of the Internal Revenue Code of 1986, as amended (the "Code"), that is or may become applicable to the Notes, necessary to maintain the exclusion from gross income for federal income tax purposes of the interest on the Notes, including but not limited to any provisions requiring the rebate of earnings on amounts held in funds or accounts created with respect to the Notes and (2) it will not use or permit the use of any of the proceeds of the Notes or other funds of the City nor take or permit any other action, or fail to take any action, if any such action or failure to act would adversely affect the exclusion from gross income for federal income tax purposes of the interest on the Notes; provided, however, the foregoing provision in (1) above shall be and become null and void if and to the extent that the City shall receive an opinion from nationally recognized bond counsel

CONTINUED ON PAGE 22 A

CONTINUED FROM PAGE 21 A

which concludes that compliance with the foregoing covenant and the provisions of the Code as provided in this section shall not be required to maintain and continue the tax-exempt status of the interest income on the Notes.

Section Eight. Further Authority. The duly elected and appointed officers of the City, including the Mayor, the City Clerk and the Finance Director, are hereby further authorized and directed to execute all documents and take such actions as they may deem necessary or advisable in order to carry out and perform the purposes of this Ordinance and to make ministerial alterations, changes or additions in the foregoing agreements, statements, instruments and other documents herein approved, authorized and confirmed which they may approve, and the execution or taking of such action shall be conclusive evidence of such necessity or advisability.

Section Nine. Effective Date. That this Ordinance shall take effect and be in force after its publication as provided by law.

PASSED by the Council the 4th day of November, 1996.

APPROVED by the Mayor the 4th day of November, 1996

(S E A L)

Marcia Rinehart

Marcia Rinehart, Mayor

ATTEST:

Martha Heizer

Martha Heizer, City Clerk

APPROVED FOR FORM:

R. S. Wetzler, City Attorney

WII-tnnmr131

ORDINANCE NO. 1622

AN ORDINANCE AUTHORIZING AND PROVIDING FOR THE ISSUANCE AND DELIVERY OF TEMPORARY NOTES, PROJECT 128 (OLD KENNETH ROAD), OF THE CITY OF LEAWOOD, KANSAS, IN THE PRINCIPAL AMOUNT OF $600,000 TO PROVIDE TEMPORARY FINANCING OF THE CITY'S SHARE OF THE COST OF CONSTRUCTION OF OLD KENNETH ROAD BETWEEN K-150 AND KENNETH PARKWAY, SAID IMPROVEMENTS TO CONSIST OF A 2-LANE UNDIVIDED ROADWAY WITH CONCRETE CURB AND GUTTER, AND ALSO INCLUDING ALL NECESSARY STORM DRAINAGE FACILITIES, SIDEWALKS, STREET LIGHTING AND OTHER APPURTENANCES, IN THE CITY OF LEAWOOD.

WHEREAS, pursuant to K.S.A. 12-6a01, et seq., as amended, and Resolution No. 1101, the Governing Body of the City of Leawood, Kansas (the "City") has heretofore authorized the following described improvement project within the City, to wit: construction of Old Kenneth Road between K-150 and Kenneth Parkway, improvements to consist of a 2-lane undivided roadway with concrete curb and gutter, and also including all necessary storm drainage facilities, sidewalks, street lighting and other appurtenances (the "Project") at an estimated cost of $635,834.00; and

WHEREAS, the Project has been commenced and the City has heretofore issued its Temporary Notes, Project 128 (Old Kenneth Road), dated March 1, 1996, in the principal amount of $600,000 (the "Prior Notes") to provide funds to pay the costs of the Project heretofore incurred by the City; and

WHEREAS, said Prior Notes become due and payable in the immediate future but all aspects of the Project will not be completed at the date of maturity thereof; and

WHEREAS, the City is authorized by law and in particular K.S.A. 10-123, as amended, to issue temporary notes of the City to provide funds to redeem and pay the Prior Notes as the same become due and payable.

NOW, THEREFORE, BE IT ORDAINED BY THE GOVERNING BODY OF THE CITY OF LEAWOOD, KANSAS, AS FOLLOWS:

Section One. Authorization of Notes. That in order to provide funds to redeem and pay the Prior Notes to become due in the immediate future, there shall be issued and the City is hereby authorized to issue temporary notes of the City, designated City of Leawood, Kansas, Temporary Notes, Project 128 (Old Kenneth Road), in the aggregate principal amount of Six Hundred Thousand Dollars ($600,000) (the "Notes"). The amount of the Notes together with other temporary notes heretofore issued to finance the Project which remain outstanding does not exceed the total estimated costs of said Project.

Section Two. Terms of the Notes. Said issue of Notes shall consist of bearer notes numbered 1 through 6 inclusive, each in the denomination of $100,000. Each of said Notes shall be dated November 11, 1996, shall mature by their stated terms and become due and payable on August 7, 1997. The Notes shall bear interest from their dated date, payable at maturity or upon redemption prior thereto as herein provided, at a rate of interest of 3.80% per annum (computed on the basis of actual days elapsed and a 360-day year composed of twelve 30-day months). The Notes shall be subject to redemption at the option of the City upon notice as hereinafter provided and shall be redeemed and cancelled contemporaneously with the issuance of general obligation improvement bonds of the City issued in lieu thereof to provide permanent financing of the Project.

Both principal of and interest on said Notes shall be payable in lawful money of the United States of America by check or draft at the office of the City Treasurer of the City upon presentation and surrender of said Notes.

The City reserves the right to redeem and pay said Notes, in whole or in part (and if in part in denominations of $100,000 selected by the City in its sole discretion), at any date prior to the stated maturity of said Notes by notice thereof given in writing by first class mail to the original purchaser of the Notes and to any known holder of the Notes or by the publication of such notice at least one time in a newspaper published or of general circulation in the metropolitan Kansas City area, and payment of said Notes, such publication of such notice or mailing of written notification of redemption to the original purchaser and the known holder to be at least ten days prior to the redemption date fixed in such notice. Notice of such redemption having been given as aforesaid, interest shall cease to accrue on said Notes from and after the redemption date.

Section Three. Security for the Notes. The full faith, credit and resources of the City of Leawood, Kansas, shall be and the same are hereby irrevocably pledged for the prompt payment of the principal of and interest on the Notes.

The Governing Body of the City shall make provisions for the payment of said Notes by the issuance of renewal notes or general obligation bonds of the City to provide permanent financing of the Project upon the completion thereof. If said bonds shall not be so issued and the Notes shall not be so paid, the Governing Body shall levy and collect special assessments on property benefitted by the Project, and to the extent said special assessments shall not be so collected, the Governing Body shall levy and collect a tax upon all taxable tangible property

within the territorial limits of the City in an amount sufficient to pay the principal of and interest on said Notes as the same become due and payable.

Section Four. Form of Notes. Each of said Notes shall be in customary form as provided by law, shall be signed by the Mayor and attested by the City Clerk of the City and shall have the seal of said City affixed thereto.

Section Five. Execution and Delivery. The Mayor and City Clerk of the City are hereby authorized and directed to prepare and execute the Notes herein authorized in the form and substance hereinbefore described and as provided by law and to procure the proper registration in the office of the City Clerk and in the office of the Treasurer of the State of Kansas, and when so executed and registered, said Notes shall be countersigned by the City Clerk and delivered to United Missouri Bank, the original purchaser thereof, upon payment of the purchase price therefor which shall not be less than 99.885% of the principal amount thereof plus accrued interest to the date of delivery thereof to the original purchaser thereof.

Section Six. Disposition of Proceeds. The proceeds of the sale of the Notes shall be deposited with the City Treasurer to be used to redeem and retire the Prior Notes.

Section Seven. Tax Covenants. The City covenants and agrees that (1) it will comply with each and every provision of Section 103 and Sections 141 through 150 of the Internal Revenue Code of 1986, as amended (the "Code"), that is or may become applicable to the Notes, necessary to maintain the exclusion from gross income for federal income tax purposes of the interest on the Notes, including but not limited to any provisions requiring the rebate of earnings on amounts held in funds or accounts created with respect to the Notes and (2) it will not use or permit the use of any of the proceeds of the Notes or other funds of the City nor take or permit any other action, or fail to take any action, if any such action or failure to act would adversely affect the exclusion from gross income for federal income tax purposes of the interest on the Notes; provided, however, the foregoing provision in (1) above shall be and become null and void if and to the extent that the City shall receive an opinion from nationally recognized bond counsel which concludes that compliance with the foregoing covenant and the provisions of the Code as provided in this section shall not be required to maintain and continue the tax-exempt status of the interest income on the Notes.

Section Eight. Further Authority. The duly elected and appointed officers of the City, including the Mayor, the City Clerk and the Finance Director, are hereby further authorized and directed to execute all documents and take such actions as they may deem necessary or advisable in order to carry out and perform the purposes of this Ordinance and to make ministerial alterations, changes or additions in the foregoing agreements, statements, instruments and other documents herein approved, authorized and confirmed which they may approve, and the execution or taking of such action shall be conclusive evidence of such necessity or advisability.

Section Nine. Effective Date. That this Ordinance shall take effect and be in force after its publication as provided by law.

PASSED by the Council the 4th day of November, 1996.

APPROVED by the Mayor the 4th day of November, 1996.

(SEAL)

Marcia Rinehart

Marcia Rinehart, Mayor

ATTEST:

Martha Heizer

Martha Heizer, City Clerk

APPROVED FOR FORM:

R. S. Wetzler, City Attorney

WII-tnr128

ORD1622

Publication Fees: $91.34

The Legal Record
600 E. Santa Fe, Suite 4
Olathe, KS 66061-3700

CITY OF LEAWOOD
ATTN: MARTHA HEIZER
4800 TOWN CENTER DR
LEAWOOD, KS 66211

Proof of Publication

STATE OF KANSAS, JOHNSON COUNTY, SS;
Tammy Schwien, of lawful age, being first duly sworn, deposes and says that she is Legal Notices Administrator of The Legal Record which is a newspaper printed in the State of Kansas, published in and of general paid circulation on a weekly, monthly or yearly basis in Johnson County, Kansas, is not a trade, religious or fraternal publication, is published at least weekly fifty (50) times a year, has been so published continuously and uninterrupted in said County and State for a period of more than five (5) years prior to the first publication of the notice attached, and has been admitted at the post office as second class matter (now called periodicals class).
That a notice was published in all editions of the regular and entire issue for the following subject matter (also identified by the following case number, if any) for 1 consecutive week(s), as follows:

ORDINANCE NO. 1622--11/5/96

Tammy Schwien
Legal Notices Administrator

Subscribed and sworn to before me on this date:
November 6, 1996

Debra Dziadura
Notary Public

DEBRA DZIADURA
Notary Public - State of Kansas

My appointment expires: August 21, 1999.

$91.34

ORDINANCE NO. 1622

First published in The Legal Record, Tuesday, November 5, 1996.

ORDINANCE NO. 1622

AN ORDINANCE AUTHORIZING AND PROVIDING FOR THE ISSUANCE AND DELIVERY OF TEMPORARY NOTES, PROJECT 128 (OLD KENNETH ROAD), OF THE CITY OF LEAWOOD, KANSAS, IN THE PRINCIPAL AMOUNT OF $600,000 TO PROVIDE TEMPORARY FINANCING OF THE CITY'S SHARE OF THE COST OF CONSTRUCTION OF OLD KENNETH ROAD BETWEEN K-150 AND KENNETH PARKWAY, SAID IMPROVEMENTS TO CONSIST OF A 2-LANE UNDIVIDED ROADWAY WITH CONCRETE CURB AND GUTTER, AND ALSO INCLUDING ALL NECESSARY STORM DRAINAGE FACILITIES, SIDEWALKS, STREET LIGHTING AND OTHER APPURTENANCES, IN THE CITY OF LEAWOOD.

WHEREAS, pursuant to K.S.A. 12-6a01, et seq., as amended, and Resolution No. 1101, the Governing Body of the City of Leawood, Kansas (the "City") has heretofore authorized the following described improvement project within the City, to wit: construction of Old Kenneth Road between K-150 and Kenneth Parkway, improvements to consist of a 2-lane undivided roadway with concrete curb and gutter, and also including all necessary storm drainage facilities, sidewalks, street lighting and other appurtenances (the "Project") at an estimated cost of $635,834.00; and

WHEREAS, the Project has been commenced and the City has heretofore issued its Temporary Notes, Project 128 (Old Kenneth Road), dated March 1, 1996, in the principal amount of $600,000 (the "Prior Notes") to provide funds to pay the costs of the Project heretofore incurred by the City; and

WHEREAS, said Prior Notes become due and payable in the immediate future but all aspects of the Project will not be completed at the date of maturity thereof, and

WHEREAS, the City is authorized by law and in particular K.S.A. 10-123, as amended, to issue temporary notes of the City to provide funds to redeem and pay the Prior Notes as the same become due and payable.

NOW, THEREFORE, BE IT ORDAINED BY THE GOVERNING BODY OF THE CITY OF LEAWOOD, KANSAS, AS FOLLOWS:

Section One. Authorization of Notes. That in order to provide funds to redeem and pay the Prior Notes to become due in the immediate future, there shall be issued and the City is hereby authorized to issue temporary notes of the City, designated City of Leawood, Kansas, Temporary Notes, Project 128 (Old Kenneth Road), in the aggregate principal amount of Six Hundred Thousand Dollars ($600,000) (the "Notes"). The amount of the Notes together with other temporary notes heretofore issued to finance the Project which remain outstanding does not exceed the total estimated costs of said Project.

Section Two. Terms of the Notes. Said issue of Notes shall consist of bearer notes numbered 1 through 6 inclusive, each in the denomination of $100,000. Each of said Notes shall be dated November 11, 1996, shall mature by their stated terms and become due and payable on August 7, 1997. The Notes shall bear interest from their dated date, payable at maturity or upon redemption prior thereto as herein provided, at a rate of interest of 3.80% per annum (computed on the basis of actual days elapsed and a 360-day year composed of twelve 30-day months). The Notes shall be subject to redemption at the option of the City upon notice as hereinafter provided and shall be redeemed and cancelled contemporaneously, with the issuance of general obligation improvement bonds of the City issued in lieu thereof to provide permanent financing of the Project.

Both principal of and interest on said Notes shall be payable in lawful money of the United States of America by check or draft at the office of the City Treasurer of the City upon presentation and surrender of said Notes.

The City reserves the right to redeem and pay said Notes, in whole or in part (and if in part in denominations of $100,000 selected by the City in its sole discretion), at any date prior to the stated maturity of said Notes by notice thereof given in writing by first class mail to the original purchaser of the Notes and to any known holder of the Notes or by the publication of such notice at least one time in a newspaper published or of general circulation in the

CONTINUED ON PAGE 24 A

CONTINUED FROM PAGE 23A

metropolitan Kansas City area, and payment of said Notes, such publication of such notice or mailing of written notification of redemption to the original purchaser and the known holder to be at least ten days prior to the redemption date fixed in such notice. Notice of such redemption having been given as aforesaid, interest shall cease to accrue on said Notes from and after the redemption date.

Section Three. Security for the Notes. The full faith, credit and resources of the City of Leawood, Kansas, shall be and the same are hereby irrevocably pledged for the prompt payment of the principal of and interest on the Notes.

The Governing Body of the City shall make provisions for the payment of said Notes by the issuance of renewal notes or general obligation bonds of the City to provide permanent financing of the Project upon the completion thereof. If said bonds shall not be so issued and the Notes shall not be so paid, the Governing Body shall levy and collect special assessments on property benefitted by the Project, and to the extent said special assessments shall not be so collected, the Governing Body shall levy and collect a tax upon all taxable tangible property within the territorial limits of the City in an amount sufficient to pay the principal of and interest on said Notes as the same become due and payable.

Section Four. Form of Notes. Each of said Notes shall be in customary form as provided by law, shall be signed by the Mayor and attested by the City Clerk of the City and shall have the seal of said City affixed thereto.

Section Five. Execution and Delivery. The Mayor and City Clerk of the City are hereby authorized and directed to prepare and execute the Notes herein authorized in the form and substance hereinbefore described and as provided by law and to procure the proper registration in the office of the City Clerk and in the office of the Treasurer of the State of Kansas, and when so executed and registered, said Notes shall be countersigned by the City Clerk and delivered to United Missouri Bank, the original purchaser thereof, upon payment of the purchase price therefor which shall not be less than 99.885% of the principal amount thereof plus accrued interest to the date of delivery thereof to the original purchaser thereof.

Section Six. Disposition of Proceeds. The proceeds of the sale of the Notes shall be deposited with the City Treasurer to be used to redeem and retire the Prior Notes.

Section Seven Tax Covenants. The City covenants and agrees that (1) it will comply with each and every provision of Section 103 and Sections 141 through 150 of the Internal Revenue Code of 1986, as amended (the "Code"), that is or may become applicable to the Notes, necessary to maintain the exclusion from gross income for federal income tax purposes of the interest on the Notes, including but not limited to any provisions requiring the rebate of earnings on amounts held in funds or accounts created with respect to the Notes and (2) it will not use or permit the use of any of the proceeds of the Notes or other funds of the City nor take or permit any other action, or fail to take any action, if any such action or failure to act would adversely affect the exclusion from gross income for federal income tax purposes of the interest on the Notes; provided, however, the foregoing provision in (1) above shall be and become null and void if and to the extent that the City shall receive an opinion from nationally recognized bond counsel which concludes that compliance with the foregoing covenant and the provisions of the Code as provided in this section shall not be required to maintain and continue the tax-exempt status of the interest income on the Notes.

Section Eight. Further Authority The duly elected and appointed officers of the City, including the Mayor, the City Clerk and the Finance Director, are hereby further authorized and directed to execute all documents and take such actions as they may deem necessary or advisable in order to carry out and perform the purposes of this Ordinance and to make ministerial alterations, changes or additions in the foregoing agreements, statements, instruments and other documents herein approved, authorized and confirmed which they may approve, and the execution or taking of such action shall be conclusive evidence of such necessity or advisability.

Section Nine. Effective Date. That this Ordinance shall take effect and in force after its publication as provided by law.

PASSED by the Council the 4th day of November, 1996.

APPROVED by the Mayor the 4th day of November, 1996.

(S E A L)

Marcia Rinehart

Marcia Rinehart, Mayor

ATTEST:

Martha Heizer

Martha Heizer, City Clerk

APPROVED FOR FORM:

R. S. Wetzler, City Attorney

WII-tnr128

ORDINANCE NO. 1621

AN ORDINANCE AUTHORIZING AND PROVIDING FOR THE ISSUANCE AND DELIVERY OF TEMPORARY NOTES, PROJECT 126 (MISSION ROAD, 95TH STREET-103RD STREET), OF THE CITY OF LEAWOOD, KANSAS, IN THE PRINCIPAL AMOUNT OF $200,000 TO PROVIDE TEMPORARY FINANCING OF THE COST OF IMPROVEMENT OR REIMPROVEMENT OF MISSION ROAD, 95TH STREET-103RD STREET, INCLUDING GRADING, REGRADING, CURBING, RECURBING, GUTTERING, REGUTTERING, PAVING, REPAVING, MACADAMIZING, REMACADAMIZING, CONSTRUCTING, RECONSTRUCTING, OPENING, WIDENING, EXTENDING, ROUNDING CORNERS, STRAIGHTENING, RELOCATING, CONSTRUCTION OR RECONSTRUCTION OF ANY NECESSARY BRIDGES AND APPROACHES THERETO, VIADUCTS, OVERPASSES, UNDERPASSES, CULVERTS, STORM DRAINAGE, TRAFFICWAY ILLUMINATION, TRAFFIC CONTROL DEVICES, PEDESTRIAN WAYS, BICYCLE WAYS OR OTHER IMPROVEMENTS AND OTHER INCIDENTAL CONSTRUCTION COSTS, IN THE CITY OF LEAWOOD.

WHEREAS, pursuant to K.S.A. 12-685, et seq., as amended, and Ordinance No. 1330, the Governing Body of the City of Leawood, Kansas (the "City") has heretofore authorized the following described improvement project within the City, to wit: improvement of certain sections of Mission Road from 385 feet south of 95th Street to 385 feet south of 103rd Street within the City of Leawood (the "Project") at an estimated cost of $1,571,300; and

WHEREAS, the Project has been commenced and the City has heretofore issued its Temporary Notes, Project 126 (Mission Road, 95th Street-103rd Street), dated March 1, 1996, in the principal amount of $200,000 (the "Prior Notes") to provide funds to pay the costs of the Project heretofore incurred by the City; and

WHEREAS, said Prior Notes become due and payable in the immediate future but all aspects of the Project will not be completed at the date of maturity thereof; and

WHEREAS, the City is authorized by law and in particular K.S.A. 10-123, as amended, to issue temporary notes of the City to provide funds to redeem and pay the Prior Notes as the same become due and payable.

NOW, THEREFORE, BE IT ORDAINED BY THE GOVERNING BODY OF THE CITY OF LEAWOOD, KANSAS, AS FOLLOWS:

Section One. Authorization of Notes. That in order to provide funds to redeem and pay the Prior Notes to become due in the immediate future there shall be issued and the City is hereby authorized to issue temporary notes of the City, designated City of Leawood, Kansas, Temporary Notes, Project 126 (Mission Road, 95th Street-103rd Street), in the aggregate principal amount of Two Hundred Thou-

sand Dollars ($200,000) (the "Notes"). The amount of the Notes together with other temporary notes heretofore issued to finance the Project which remain outstanding does not exceed the total estimated costs of said Project.

Section Two. Terms of the Notes. Said issue of Notes shall consist of bearer notes numbered 1 and 2, each in the denomination of $100,000. Each of said Notes shall be dated November 11, 1996, shall mature by their stated terms and become due and payable on August 7, 1997. The Notes shall bear interest from their dated date, payable at maturity or upon redemption prior thereto as herein provided, at a rate of interest of 3.80% per annum (computed on the basis of actual days elapsed and a 360-day year composed of twelve 30-day months). The Notes shall be subject to redemption at the option of the City upon notice as hereinafter provided and shall be redeemed and cancelled contemporaneously with the issuance of general obligation improvement bonds of the City issued in lieu thereof to provide permanent financing of the Project.

Both principal of and interest on said Notes shall be payable in lawful money of the United States of America by check or draft at the office of the City Treasurer of the City upon presentation and surrender of said Notes.

The City reserves the right to redeem and pay said Notes, in whole or in part (and if in part in denominations of $100,000 selected by the City in its sole discretion), at any date prior to the stated maturity of said Notes by notice thereof given in writing by first class mail to the original purchaser of the Notes and to any known holder of the Notes or by the publication of such notice at least one time in a newspaper published or of general circulation in the metropolitan Kansas City area, and payment of said Notes, such publication of such notice or mailing of written notification of redemption to the original purchaser and the known holder to be at least ten days prior to the redemption date fixed in such notice. Notice of such redemption having been given as aforesaid, interest shall cease to accrue on said Notes from and after the redemption date.

Section Three. Security for the Notes. The full faith, credit and resources of the City of Leawood, Kansas, shall be and the same are hereby irrevocably pledged for the prompt payment of the principal of and interest on the Notes.

The Governing Body of the City shall make provisions for the payment of said Notes by the issuance of renewal notes or general obligation bonds of the City to provide permanent financing of the Project upon the completion thereof. If said

bonds shall not be so issued and the Notes shall not be so paid, the Governing Body shall levy and collect a tax upon all taxable tangible property within the territorial limits of the City in an amount sufficient to pay the principal of and interest on said Notes as the same become due and payable.

Section Four. Form of Notes. Each of said Notes shall be in customary form as provided by law, shall be signed by the Mayor and attested by the City Clerk of the City and shall have the seal of said City affixed thereto.

Section Five. Execution and Delivery. The Mayor and City Clerk of the City are hereby authorized and directed to prepare and execute the Notes herein authorized in the form and substance hereinbefore described and as provided by law and to procure the proper registration in the office of the City Clerk and in the office of the Treasurer of the State of Kansas, and when so executed and registered, said Notes shall be countersigned by the City Clerk and delivered to United Missouri Bank, the original purchaser thereof, upon payment of the purchase price therefor which shall not be less than 99.885% of the principal amount thereof plus accrued interest to the date of delivery thereof to the original purchaser thereof.

Section Six. Disposition of Proceeds. The proceeds of the sale of the Notes shall be deposited with the City Treasurer to be used to redeem and retire the Prior Notes.

Section Seven. Tax Covenants. The City covenants and agrees that (1) it will comply with each and every provision of Section 103 and Sections 141 through 150 of the Internal Revenue Code of 1986, as amended (the "Code"), that is or may become applicable to the Notes, necessary to maintain the exclusion from gross income for federal income tax purposes of the interest on the Notes, including but not limited to any provisions requiring the rebate of earnings on amounts held in funds or accounts created with respect to the Notes and (2) it will not use or permit the use of any of the proceeds of the Notes or other funds of the City nor take or permit any other action, or fail to take any action, if any such action or failure to act would adversely affect the exclusion from gross income for federal income tax purposes of the interest on the Notes; provided, however, the foregoing provision in (1) above shall be and become null and void if and to the extent that the City shall receive an opinion from nationally recognized bond counsel which concludes that compliance with the foregoing covenant and the provisions of

the Code as provided in this section shall not be required to maintain and continue the tax-exempt status of the interest income on the Notes.

Section Eight. Further Authority. The duly elected and appointed officers of the City, including the Mayor, the City Clerk and the Finance Director, are hereby further authorized and directed to execute all documents and take such actions as they may deem necessary or advisable in order to carry out and perform the purposes of this Ordinance and to make ministerial alterations, changes or additions in the foregoing agreements, statements, instruments and other documents herein approved, authorized and confirmed which they may approve, and the execution or taking of such action shall be conclusive evidence of such necessity or advisability.

Section Nine. Effective Date. That this Ordinance shall take effect and be in force after its publication as provided by law.

PASSED by the Council the 4th day of November, 1996.

APPROVED by the Mayor the 4th day of November, 1996.

(SEAL)

Marcia Rinehart

Marcia Rinehart, Mayor

ATTEST:

Martha Heizer

Martha Heizer, City Clerk

APPROVED FOR FORM:

R. S. Wetzler, City Attorney

WII-tnr126

ORD1621

Publication Fees: $91.15

The Legal Record
600 E. Santa Fe, Suite 4
Olathe, KS 66061-3700

CITY OF LEAWOOD
ATTN: MARTHA HEIZER
4800 TOWN CENTER DR
LEAWOOD, KS 66211

Proof of Publication

STATE OF KANSAS, JOHNSON COUNTY, SS;
Tammy Schwien, of lawful age, being first duly sworn, deposes and says that she is Legal Notices Administrator of The Legal Record which is a newspaper printed in the State of Kansas, published in and of general paid circulation on a weekly, monthly or yearly basis in Johnson County, Kansas, is not a trade, religious or fraternal publication, is published at least weekly fifty (50) times a year, has been so published continuously and uninterrupted in said County and State for a period of more than five (5) years prior to the first publication of the notice attached, and has been admitted at the post office as second class matter (now called periodicals class).
That a notice was published in all editions of the regular and entire issue for the following subject matter (also identified by the following case number, if any) for 1 consecutive week(s), as follows:

ORDINANCE NO. 1621--11/5/96

Tammy Schwien
Legal Notices Administrator

Subscribed and sworn to before me on this date:
November 6, 1996

Debra Dziadura
Notary Public

DEBRA DZIADURA
Notary Public - State of Kansas

My appointment expires: August 21, 1999.

$91.15

[redacted]

ORDINANCE NO. 1621

First published in The Legal Record, Tuesday, November 5, 1996.

ORDINANCE NO. 1621

AN ORDINANCE AUTHORIZING AND PROVIDING FOR THE ISSUANCE AND DELIVERY OF TEMPORARY NOTES, PROJECT 126 (MISSION ROAD, 95TH STREET-103RD STREET), OF THE CITY OF LEAWOOD, KANSAS, IN THE PRINCIPAL AMOUNT OF $200,000 TO PROVIDE TEMPORARY FINANCING OF THE COST OF IMPROVEMENT OR REIMPROVEMENT OF MISSION ROAD, 95TH STREET-103RD STREET, INCLUDING GRADING, REGRADING, CURBING, RECURBING, GUTTERING, REGUTTERING, PAVING, REPAVING, MACADAMIZING, REMACADAMIZING, CONSTRUCTING, RECONSTRUCTING, OPENING, WIDENING, EXTENDING, ROUNDING CORNERS, STRAIGHTENING, RELOCATING, CONSTRUCTION OR RECONSTRUCTION OF ANY NECESSARY BRIDGES AND APPROACHES THERETO, VIADUCTS, OVERPASSES, UNDERPASSES, CULVERTS, STORM DRAINAGE, TRAFFICWAY ILLUMINATION, TRAFFIC CONTROL DEVICES, PEDESTRIAN WAYS, BICYCLE WAYS OR OTHER IMPROVEMENTS AND OTHER INCIDENTAL CONSTRUCTION COSTS, IN THE CITY OF LEAWOOD.

WHEREAS, pursuant to K.S.A. 12-685, et seq., as amended, and Ordinance No. 1330, the Governing Body of the City of Leawood, Kansas (the "City") has heretofore authorized the following described improvement project within the City, to wit: improvement of certain sections of Mission Road from 385 feet south of 95th Street to 385 feet south of 103rd Street within the City of Leawood (the "Project") at an estimated cost of $1,571,300; and

WHEREAS, the Project has been commenced and the City has heretofore issued its Temporary Notes, Project 126 (Mission Road, 95th Street-103rd Street), dated March 1, 1996, in the principal amount of $200,000 (the "Prior Notes") to provide funds to pay the costs of the Project heretofore incurred by the City; and

WHEREAS, said Prior Notes become due and payable in the immediate future but all aspects of the Project will not be completed at the date of maturity thereof; and

WHEREAS, the City is authorized by law and in particular K.S.A. 10-123, as amended, to issue temporary notes of the City to provide funds to redeem and pay the Prior Notes as the same become due and payable.

NOW, THEREFORE, BE IT ORDAINED BY THE GOVERNING BODY OF THE CITY OF LEAWOOD, KANSAS, AS FOLLOWS:

Section One. Authorization of Notes. That in order to provide funds to redeem and pay the Prior Notes to become due in the immediate future there shall be issued and the City is hereby authorized to issue temporary notes of the City, designated City of Leawood, Kansas, Temporary Notes, Project 126 (Mission Road, 95th Street-103rd Street), in the aggregate principal amount of Two Hundred Thousand Dollars ($200,000) (the "Notes"). The amount of the Notes, together with other temporary notes heretofore issued to finance the Project which remain outstanding does not exceed the total estimated costs of said Project.

Section Two. Terms of the Notes. Said issue of Notes shall consist of bearer notes numbered 1 and 2, each in the denomination of $100,000. Each of said Notes shall be dated November 11, 1996, shall mature by their stated terms and become due and payable on August 7, 1997. The Notes shall bear interest from their dated date, payable at maturity or upon redemption prior thereto as herein provided, at a rate of interest of 3.80% per annum (computed on the basis of actual days elapsed and a 360-day year composed of twelve 30-day months). The Notes shall be subject to redemption at the option of the City upon notice as hereinafter provided and shall be redeemed and cancelled contemporaneously with the issuance of general obligation improvement bonds of the City issued in lieu thereof to provide permanent financing of the Project.

Both principal of and interest on said Notes shall be payable in lawful money of the United States of America by check or draft at the office of the City Treasurer of the City upon presentation and surrender of said Notes.

The City reserves the right to redeem and pay said Notes, in whole or in part (and if in part in denominations of $100,000 selected by the City in its sole discretion), at any date prior to the stated maturity of said Notes by notice thereof given in writing by first class mail to the original purchaser of the Notes and to any known holder of the Notes or by the publication of such notice at least one time in a newspaper published or of general circulation in the metropolitan Kansas City area, and payment of said Notes, such publication of such notice or mailing of written notification of redemption to the original purchaser and the known holder to be at least ten days prior to the redemption date fixed in such notice. Notice of such redemption having been given as aforesaid, interest shall cease to accrue on said Notes from and after the redemption date.

Section Three. Security for the Notes. The full faith, credit and resources of the City of Leawood, Kansas, shall be and the same are hereby irrevocably pledged for the prompt payment of the principal of and interest on the Notes.

The Governing Body of the City shall make provisions for the payment of said Notes by the issuance of renewal notes or general obligation bonds of the City to provide permanent financing of the Project upon the completion thereof. If said bonds shall not be so issued and the Notes shall not be so paid, the Governing Body shall levy and collect a tax upon all taxable tangible property within the territorial limits of the City in an amount sufficient to pay the principal of and interest on said Notes as the same become due and payable.

Section Four. Form of Notes. Each of said Notes shall be in customary form as provided by law, shall be signed by the Mayor and attested by the City Clerk of the City and shall have the seal of said City affixed thereto.

Section Five. Execution and Delivery. The Mayor and City Clerk of the City are hereby authorized and directed to prepare and execute the Notes herein authorized in the form and substance hereinbefore described and as provided by law and to procure the proper registration in the office of the City Clerk and in the office of the Treasurer of the State of Kansas, and when so executed and registered, said Notes shall be countersigned by the City Clerk and delivered to United Missouri Bank, the original purchaser thereof, upon payment of the purchase price therefor which shall not be less than 99.885% of the principal amount thereof plus accrued interest to the date of delivery thereof to the original purchaser thereof.

Section Six. Disposition of Proceeds. The proceeds of the sale of the Notes shall be deposited with the City Treasurer to be used to redeem and retire the Prior Notes.

Section Seven. Tax Covenants. The City covenants and agrees that (1) it will comply with each and every provision of Section 103 and Sections 141 through 150 of the Internal Revenue Code of 1986, as amended (the "Code"), that is or may become applicable to the Notes, necessary to maintain the exclusion from gross income for federal income tax purposes of the interest on the Notes, including but not limited to any provisions requiring the rebate of earnings on amounts held in funds or accounts created with respect to the Notes and (2) it will not use or permit the use of any of the proceeds of the Notes or other funds of the City nor take or permit any other action, or fail to take any action, if any such action or failure to act would adversely affect the exclusion from gross income for federal income tax purposes of the interest on the Notes; provided, however, the foregoing provision in (1) above shall be and become null and void if and to the extent that the City shall receive an opinion from nationally recognized bond counsel which concludes that compliance with the foregoing covenant and the provisions of

CONTINUED ON PAGE 29A

CONTINUED FROM PAGE 28A

the Code as provided in this section shall not be required to maintain and continue the tax-exempt status of the interest income on the Notes.

Section Eight. Further Authority. The duly elected and appointed officers of the City, including the Mayor, the City Clerk and the Finance Director, are hereby further authorized and directed to execute all documents and take such actions as they may deem necessary or advisable in order to carry out and perform the purposes of this Ordinance and to make ministerial alterations, changes or additions in the foregoing agreements, statements, instruments and other documents herein approved, authorized and confirmed which they may approve, and the execution or taking of such action shall be conclusive evidence of such necessity or advisability.

Section Nine. Effective Date. That this Ordinance shall take effect and be in force after its publication as provided by law.

PASSED by the Council the 4th day of November, 1996.

APPROVED by the Mayor the 4th day of November, 1996.

(S E A L)

Marcia Rinehart

Marcia Rinehart, Mayor

ATTEST:

Martha Heizer

Martha Heizer, City Clerk

APPROVED FOR FORM:

R. S. Wetzler, City Attorney

WII-tnr126

ORDINANCE NO. 1620

AN ORDINANCE AUTHORIZING AND PROVIDING FOR THE ISSUANCE AND DELIVERY OF TEMPORARY NOTES, PROJECT 124 (135TH STREET [K-150], STATE LINE-NALL AVENUE), OF THE CITY OF LEAWOOD, KANSAS, IN THE PRINCIPAL AMOUNT OF $2,500,000 TO PROVIDE TEMPORARY FINANCING OF THE COST OF CONSTRUCTION OF IMPROVEMENTS TO 135TH STREET (K-150), STATE LINE-NALL AVENUE, INCLUDING GRADING, REGRADING, CURBING, RECURBING, GUTTERING, REGUTTERING, PAVING, REPAVING, MACADAMIZING, REMACADAMIZING, CONSTRUCTING, RECONSTRUCTING, OPENING, WIDENING, EXTENDING, ROUNDING CORNERS, STRAIGHTENING, RELOCATING, CONSTRUCTION OR RECONSTRUCTION OF ANY NECESSARY BRIDGES, APPROACHES THERETO, VIADUCTS, OVERPASSES, UNDERPASSES, CULVERTS, STORM DRAINAGE, TRAFFICWAY ILLUMINATION, TRAFFIC CONTROL DEVICES, PEDESTRIAN WAYS, BICYCLE WAYS, OR OTHER IMPROVEMENTS OR ANY TWO OR MORE OF SUCH IMPROVEMENTS OR REIMPROVEMENTS AND OTHER INCIDENTAL CONSTRUCTION COSTS, IN THE CITY OF LEAWOOD.

WHEREAS, pursuant to K.S.A. 12-685, et seq., as amended, and Ordinance No. 1203, the Governing Body of the City of Leawood, Kansas (the "City") has heretofore authorized the following described improvement project within the City, to wit: the improvement and reimprovement of 135th Street (K-150) located within the City of Leawood (State Line-Nall Avenue) (the "Project") at an estimated cost of $4,959,851; and

WHEREAS, the Project has been commenced and the City has heretofore issued its Temporary Notes, Project 124 (135th Street [K-150], State Line-Nall Avenue), dated March 1, 1996, in the principal amount of $2,000,000 (the "Prior Notes") to provide funds to pay the costs of the Project heretofore incurred by the City; and

WHEREAS, the Prior Notes become due and payable in the immediate future but all aspects of the Project will not be completed at the date of maturity thereof, and the City has incurred or expects to incur additional costs payable within the next 9 months in the amount of $500,000; and

WHEREAS, the City is authorized by law and in particular K.S.A. 10-123, as amended, to issue temporary notes of the City to provide funds to redeem and pay the Prior Notes and to pay the costs of the Project as the same become due and payable.

NOW, THEREFORE, BE IT ORDAINED BY THE GOVERNING BODY OF THE CITY OF LEAWOOD, KANSAS, AS FOLLOWS:

Section One. Authorization of Notes. That in order to provide funds to redeem and pay the Prior Notes and to pay costs of the Project now due

or to become due in the immediate future, including necessary engineering, legal and incidental costs, there shall be issued and the City is hereby authorized to issue temporary notes of the City, designated City of Leawood, Kansas, Temporary Notes, Project 124 (135th Street [K-150], State Line-Nall Avenue), in the aggregate principal amount of Two Million Five Hundred Thousand Dollars ($2,500,000) (the "Notes"). The amount of the Notes together with other temporary notes heretofore issued to finance the Project which remain outstanding does not exceed the total estimated costs of said Project.

Section Two. Terms of the Notes. Said issue of Notes shall consist of bearer notes numbered 1 through 25 inclusive, each in the denomination of $100,000. Each of said Notes shall be dated November 11, 1996, shall mature by their stated terms and become due and payable on August 7, 1997. The Notes shall bear interest from their dated date, payable at maturity or upon redemption prior thereto as herein provided, at a rate of interest of 3.80% per annum (computed on the basis of actual days elapsed and a 360-day year composed of twelve 30-day months). The Notes shall be subject to redemption at the option of the City upon notice as hereinafter provided and shall be redeemed and cancelled contemporaneously with the issuance of general obligation improvement bonds of the City issued in lieu thereof to provide permanent financing of the Project.

Both principal of and interest on said Notes shall be payable in lawful money of the United States of America by check or draft at the office of the City Treasurer of the City upon presentation and surrender of said Notes.

The City reserves the right to redeem and pay said Notes, in whole or in part (and if in part in denominations of $100,000 selected by the City in its sole discretion), at any date prior to the stated maturity of said Notes by notice thereof given in writing by first class mail to the original purchaser of the Notes and to any known holder of the Notes or by the publication of such notice at least one time in a newspaper published or of general circulation in the metropolitan Kansas City area, and payment of said Notes, such publication of such notice or mailing of written notification of redemption to the original purchaser and the known holder to be at least ten days prior to the redemption date fixed in such notice. Notice of such redemption having been given as aforesaid, interest shall cease to accrue on said Notes from and after the redemption date.

Section Three. Security for the Notes. The full faith, credit and resources

of the City of Leawood, Kansas, shall be and the same are hereby irrevocably pledged for the prompt payment of the principal of and interest on the Notes.

The Governing Body of the City shall make provisions for the payment of said Notes by the issuance of renewal notes or general obligation bonds of the City to provide permanent financing of the Project upon the completion thereof. If said bonds shall not be so issued and the Notes shall not be so paid, the Governing Body shall levy and collect a tax upon all taxable tangible property within the territorial limits of the City in an amount sufficient to pay the principal of and interest on said Notes as the same become due and payable.

Section Four. Form of Notes. Each of said Notes shall be in customary form as provided by law, shall be signed by the Mayor and attested by the City Clerk of the City and shall have the seal of said City affixed thereto.

Section Five. Execution and Delivery. The Mayor and City Clerk of the City are hereby authorized and directed to prepare and execute the Notes herein authorized in the form and substance hereinbefore described and as provided by law and to procure the proper registration in the office of the City Clerk and in the office of the Treasurer of the State of Kansas, and when so executed and registered, said Notes shall be countersigned by the City Clerk and delivered to United Missouri Bank, the original purchaser thereof, upon payment of the purchase price therefor which shall not be less than 99.617% of the principal amount thereof plus accrued interest to the date of delivery thereof to the original purchaser thereof.

Section Six. Disposition of Proceeds. The proceeds of the sale of the Notes shall be deposited with the City Treasurer, The sum of $2,000,000 of such proceeds shall be used to redeem and retire the Prior Notes, and the balance of such proceeds shall be deposited in a special fund created for the purpose of paying costs and expenses of the Project.

Section Seven. Tax Covenants. The City covenants and agrees that (1) it will comply with each and every provision of Section 103 and Sections 141 through 150 of the Internal Revenue Code of 1986, as amended (the "Code"), that is or may become applicable to the Notes, necessary to maintain the exclusion from gross income for federal income tax purposes of the interest on the Notes, including but not limited to any provisions requiring the rebate of earnings on amounts held in funds or accounts created with respect to the Notes and (2) it will not use or

permit the use of any of the proceeds of the Notes or other funds of the City nor take or permit any other action, or fail to take any action, if any such action or failure to act would adversely affect the exclusion from gross income for federal income tax purposes of the interest on the Notes; provided, however, the foregoing provision in (1) above shall be and become null and void if and to the extent that the City shall receive an opinion from nationally recognized bond counsel which concludes that compliance with the foregoing covenant and the provisions of the Code as provided in this section shall not be required to maintain and continue the tax-exempt status of the interest income on the Notes.

Section Eight. Further Authority. The duly elected and appointed officers of the City, including the Mayor, the City Clerk and the Finance Director, are hereby further authorized and directed to execute all documents and take such actions as they may deem necessary or advisable in order to carry out and perform the purposes of this Ordinance and to make ministerial alterations, changes or additions in the foregoing agreements, statements, instruments and other documents herein approved, authorized and confirmed which they may approve, and the execution or taking of such action shall be conclusive evidence of such necessity or advisability.

Section Nine. Effective Date. That this Ordinance shall take effect and be in force after its publication as provided by law.

PASSED by the Council the 4th day of November, 1996.

APPROVED by the Mayor the 4th day of November, 1996.

Marcia Rinehart

Marcia Rinehart, Mayor

ATTEST:

Martha Heizer

Martha Heizer, City Clerk

APPROVED FOR FORM:

R. S. Wetzler, City Attorney

WII-tnnmr124

ORD1620

Publication Fees: $97.48

The Legal Record
600 E. Santa Fe, Suite 4
Olathe, KS 66061-3700

CITY OF LEAWOOD
ATTN: MARTHA HEIZER
4800 TOWN CENTER DR
LEAWOOD, KS 66211

Proof of Publication

STATE OF KANSAS, JOHNSON COUNTY, SS;
Tammy Schwien, of lawful age, being first duly sworn, deposes and says that she is Legal Notices Administrator of The Legal Record which is a newspaper printed in the State of Kansas, published in and of general paid circulation on a weekly, monthly or yearly basis in Johnson County, Kansas, is not a trade, religious or fraternal publication, is published at least weekly fifty (50) times a year, has been so published continuously and uninterrupted in said County and State for a period of more than five (5) years prior to the first publication of the notice attached, and has been admitted at the post office as second class matter (now called periodicals class).
That a notice was published in all editions of the regular and entire issue for the following subject matter (also identified by the following case number, if any) for 1 consecutive week(s), as follows:

ORDINANCE NO. 1620--11/5/96

Tammy Schwien
Legal Notices Administrator

Subscribed and sworn to before me on this date:
November 6, 1996

Debra Dziadura
Notary Public

DEBRA DZIADURA
Notary Public - State of Kansas

My appointment expires: August 21, 1999.

$97.48

WII-tnnmo147

ORDINANCE NO. 1620

First published in The Legal Record, Tuesday, November 5, 1996.

ORDINANCE NO. 1620

AN ORDINANCE AUTHORIZING AND PROVIDING FOR THE ISSUANCE AND DELIVERY OF TEMPORARY NOTES. PROJECT 124 (135TH STREET [K-150], STATE LINE-NALL AVENUE), OF THE CITY OF LEAWOOD, KANSAS, IN THE PRINCIPAL AMOUNT OF $2,500,000 TO PROVIDE TEMPORARY FINANCING OF THE COST OF CONSTRUCTION OF IMPROVEMENTS TO 135TH STREET (K-150), STATE LINE-NALL AVENUE, INCLUDING GRADING, REGRADING, CURBING, RECURBING, GUTTERING, REGUTTERING, PAVING, REPAVING, MACADAMIZING, REMACADAMIZING, CONSTRUCTING, RECONSTRUCTING, OPENING, WIDENING, EXTENDING, ROUNDING CORNERS, STRAIGHTENING, RELOCATING, CONSTRUCTION OR RECONSTRUCTION OF ANY NECESSARY BRIDGES, APPROACHES THERETO, VIADUCTS, OVERPASSES, UNDERPASSES, CULVERTS, STORM DRAINAGE, TRAFFICWAY ILLUMINATION, TRAFFIC CONTROL DEVICES, PEDESTRIAN WAYS, BICYCLE WAYS, OR OTHER IMPROVEMENTS OR ANY TWO OR MORE OF SUCH IMPROVEMENTS OR REIMPROVEMENTS AND OTHER INCIDENTAL CONSTRUCTION COSTS, IN THE CITY OF LEAWOOD.

WHEREAS, pursuant to K.S.A. 12-685, et seq., as amended, and Ordinance No.

CONTINUED ON PAGE 27A

CONTINUED FROM PAGE 26A

1203: the Governing Body of the City of Leawood, Kansas (the "City") has heretofore authorized the following described improvement project within the City, to wit: the improvement and reimprovement of 135th Street (K-150) located within the City of Leawood (State Line-Nall Avenue) (the "Project") at an estimated cost of $4,959,851; and

WHEREAS, the Project has been commenced and the City has heretofore issued its Temporary Notes, Project 124 (135th Street [K-150], State Line-Nall Avenue), dated March 1, 1996, in the principal amount of $2,000,000 (the "Prior Notes") to provide funds to pay the costs of the Project heretofore incurred by the City; and

WHEREAS, the Prior Notes become due and payable in the immediate future but all aspects of the Project will not be completed at the date of maturity thereof, and the City has incurred or expects to incur additional costs payable within the next 9 months in the amount of $500,000; and

WHEREAS, the City is authorized by law and in particular K.S.A. 10-123, as amended, to issue temporary notes of the City to provide funds to redeem and pay the Prior Notes and to pay the costs of the Project as the same become due and payable.

NOW, THEREFORE, BE IT ORDAINED BY THE GOVERNING BODY OF THE CITY OF LEAWOOD, KANSAS, AS FOLLOWS:

Section One. Authorization of Notes. That in order to provide funds to redeem and pay the Prior Notes and to pay costs of the Project now due or to become due in the immediate future, including necessary engineering, legal and incidental costs, there shall be issued and the City is hereby authorized to issue temporary notes of the City, designated City of Leawood, Kansas, Temporary Notes, Project 124 (135th Street [K-150], State Line-Nall Avenue), in the aggregate principal amount of Two Million Five Hundred Thousand Dollars ($2,500,000) (the "Notes"). The amount of the Notes together with other temporary notes heretofore issued to finance the Project which remain outstanding does not exceed the total estimated costs of said Project.

Section Two. Terms of the Notes. Said issue of Notes shall consist of bearer notes numbered 1 through 25 inclusive, each in the denomination of $100,000. Each of said Notes shall be dated November 11, 1996, shall mature by their stated terms and become due and payable on August 7, 1997. The Notes shall bear interest from their dated date, payable at maturity or upon redemption prior thereto as herein provided, at a rate of interest of 3.80% per annum (computed on the basis of actual days elapsed and a 360-day year composed of twelve 30-day months). The Notes shall be subject to redemption at the option of the City upon notice as hereinafter provided and shall be redeemed and cancelled contemporaneously with the issuance of general obligation improvement bonds of the City issued in lieu thereof to provide permanent financing of the Project.

Both principal of and interest on said Notes shall be payable in lawful money of the United States of America by check or draft at the office of the City Treasurer of the City upon presentation and surrender of said Notes.

The City reserves the right to redeem and pay said Notes, in whole or in part (and if in part in denominations of $100,000 selected by the City in its sole discretion), at any date prior to the stated maturity of said Notes by notice thereof given in writing by first class mail to the original purchaser of the Notes and to any known holder of the Notes or by the publication of such notice at least one time in a newspaper published or of general circulation in the metropolitan Kansas City area, and payment of said Notes, such publication of such notice or mailing of written notification of redemption to the original purchaser and the known holder to be at least ten days prior to the redemption date fixed in such notice. Notice of such redemption having been given as aforesaid, interest shall cease to accrue on said Notes from and after the redemption date.

Section Three. Security for the Notes. The full faith, credit and resources of the City of Leawood, Kansas, shall be and the same are hereby irrevocably pledged for the prompt payment of the principal of and interest on the Notes.

The Governing Body of the City shall make provisions for the payment of said Notes by the issuance of renewal notes or general obligation bonds of the City to provide permanent financing of the Project upon the completion thereof. If said bonds shall not be so issued and the Notes shall not be so paid, the Governing Body shall levy and collect a tax upon all taxable tangible property within the territorial limits of the City in an amount sufficient to pay the principal of and interest on said Notes as the same become due and payable.

Section Four. Form of Notes. Each of said Notes shall be in customary form as provided by law, shall be signed by the Mayor and attested by the City Clerk of the City and shall have the seal of said City affixed thereto.

Section Five. Execution and Delivery. The Mayor and City Clerk of the City are hereby authorized and directed to prepare and execute the Notes herein authorized in the form and substance hereinbefore described and as provided by law and to procure the proper registration in the office of the City Clerk and in the office of the Treasurer of the State of Kansas, and when so executed and registered, said Notes shall be countersigned by the City Clerk and delivered to United Missouri Bank, the original purchaser thereof, upon payment of the purchase price therefor which shall not be less than 99.617% of the principal amount thereof plus accrued interest to the date of delivery thereof to the original purchaser thereof.

Section Six. Disposition of Proceeds. The proceeds of the sale of the Notes shall be deposited with the City Treasurer. The sum of $2,000,000 of such proceeds shall be used to redeem and retire the Prior Notes, and the balance of such proceeds shall be deposited in a special fund created for the purpose of paying costs and expenses of the Project.

Section Seven. Tax Covenants. The City covenants and agrees that (1) it will comply with each and every provision of Section 103 and Sections 141 through 150 of the Internal Revenue Code of 1986, as amended (the "Code"), that is or may become applicable to the Notes, necessary to maintain the exclusion from gross income for federal income tax purposes of the interest on the Notes, including but not limited to any provisions requiring the rebate of earnings on amounts held in funds or accounts created with respect to the Notes and (2) it will not use or permit the use of any of the proceeds of the Notes or other funds of the City nor take or permit any other action, or fail to take any action, if any such action or failure to act would adversely affect the exclusion from gross income for federal income tax purposes of the interest on the Notes; provided, however, the foregoing provision in (1) above shall be and become null and void if and to the extent that the City shall receive an opinion from nationally recognized bond counsel which concludes that compliance with the foregoing covenant and the provisions of the Code as provided in this section shall not be required to maintain and continue the tax-exempt status of the interest income on the Notes.

Section Eight. Further Authority. The duly elected and appointed officers of the City, including the Mayor, the City Clerk and the Finance Director, are hereby further authorized and directed to execute all documents and take such actions as they may deem necessary or advisable in order to carry out and perform the purposes of this Ordinance and to make ministerial alterations, changes or additions in the foregoing agreements, statements, instruments and other documents herein approved, authorized and confirmed which they may approve, and the execution or taking of such action shall be conclusive evidence of such necessity or advisability.

Section Nine. Effective Date. That this Ordinance shall take effect and be in force after its publication as provided by law.

PASSED by the Council the 4th day of November, 1996.

APPROVED by the Mayor the 4th day of November, 1996.

(S E A L)

Marcia Rinehart

Marcia Rinehart, Mayor

CONTINUED ON PAGE 28 A

CONTINUED FROM PAGE 27A

ATTEST:

Martha Heizer. City Clerk

APPROVED FOR FORM:

R. S. Wetzler. City Attorney

WII-tnmmr124

ORDINANCE NO. 1619

AN ORDINANCE AUTHORIZING AND PROVIDING FOR THE ISSUANCE AND DELIVERY OF TEMPORARY NOTES, PROJECT 108 (COLLEGE BOULEVARD), OF THE CITY OF LEAWOOD, KANSAS, IN THE PRINCIPAL AMOUNT OF $3,800,000 TO PROVIDE TEMPORARY FINANCING OF THE COST OF IMPROVEMENT OR REIMPROVEMENT OF COLLEGE BOULEVARD, INCLUDING GRADING, REGRADING, CURBING, RECURBING, GUTTERING, REGUTTERING, PAVING, REPAVING, MACADAMIZING, REMACADAMIZING, CONSTRUCTING, RECONSTRUCTING, OPENING, WIDENING, EXTENDING, ROUNDING CORNERS, STRAIGHTENING, RELOCATING, CONSTRUCTION OR RECONSTRUCTION OF ANY NECESSARY BRIDGES AND APPROACHES THERETO, VIADUCTS, OVERPASSES, UNDERPASSES, CULVERTS, STORM DRAINAGE, TRAFFICWAY ILLUMINATION, TRAFFIC CONTROL DEVICES, PEDESTRIAN WAYS, BICYCLE WAYS OR OTHER IMPROVEMENTS AND OTHER INCIDENTAL CONSTRUCTION COSTS, IN THE CITY OF LEAWOOD.

WHEREAS, pursuant to K.S.A. 12-685, et seq., as amended, and Ordinance No. 1488, the Governing Body of the City of Leawood, Kansas (the "City") has heretofore authorized the following described improvement project within the City, to wit: the improvement or reimprovement of College Boulevard located within the City of Leawood (the "Project") at an estimated cost of $13,795,873.00; and

WHEREAS, the Project has been commenced and the City has heretofore issued its Temporary Notes, Project 108 (College Blvd.), dated March 1, 1996, in the principal amount of $3,800,000 (the "Prior Notes") to provide funds to pay the costs of the Project heretofore incurred by the City; and

WHEREAS, said Prior Notes become due and payable in the immediate future but all aspects of the Project will not be completed at the date of maturity thereof; and

WHEREAS, the City is authorized by law and in particular K.S.A. 10-123, as amended, to issue temporary notes of the City to provide funds to redeem and pay the Prior Notes as the same become due and payable.

NOW, THEREFORE, BE IT ORDAINED BY THE GOVERNING BODY OF THE CITY OF LEAWOOD, KANSAS, AS FOLLOWS:

Section One. Authorization of Notes. That in order to provide funds

to redeem and pay the Prior Notes to become due in the immediate future, there shall be issued and the City is hereby authorized to issue temporary notes of the City, designated City of Leawood, Kansas, Temporary Notes, Project 108 (College Blvd.), in the aggregate principal amount of Three Million Eight Hundred Thousand Dollars ($3,800,000.00) (the "Notes"). The amount of the Notes together with other temporary notes heretofore issued to finance the Project which remain outstanding does not exceed the total estimated costs of said Project.

Section Two. Terms of the Notes. Said issue of Notes shall consist of bearer notes numbered 1 through 38 inclusive, each in the denomination of $100,000. Each of said notes shall be dated November 11, 1996, shall mature by their stated terms and become due and payable on August 7, 1997. The Notes shall bear interest from their dated date, payable at maturity or upon redemption prior thereto as herein provided, at a rate of interest of 3.80% per annum (computed on the basis of actual days elapsed and a 360-day year composed of twelve 30-day months). The Notes shall be subject to redemption at the option of the City upon notice as hereinafter provided and shall be redeemed and cancelled contemporaneously with the issuance of general obligation improvement bonds of the City issued in lieu thereof to provide permanent financing of the Project.

Both principal of and interest on said Notes shall be payable in lawful money of the United States of America by check or draft at the office of the City Treasurer of the City upon presentation and surrender of said Notes.

The City reserves the right to redeem and pay said Notes, in whole or in part (and if in part in denominations of $100,000 selected by the City in its sole discretion), at any date prior to the stated maturity of said Notes by notice thereof given in writing by first class mail to the original purchaser of the Notes and to any known holder of the Notes or by the publication of such notice at least one time in a newspaper published or of general circulation in the metropolitan Kansas City area, and payment of said Notes, such publication of such notice or mailing of written notification of redemption to the original purchaser and the known holder

to be at least ten days prior to the redemption date fixed in such notice. Notice of such redemption having been given as aforesaid, interest shall cease to accrue on said Notes from and after the redemption date.

Section Three. Security for the Notes. The full faith, credit and resources of the City of Leawood, Kansas, shall be and the same are hereby irrevocably pledged for the prompt payment of the principal of and interest on the Notes.

The Governing Body of the City shall make provisions for the payment of said Notes by the issuance of renewal notes or general obligation bonds of the City to provide permanent financing of the Project upon the completion thereof. If said bonds shall not be so issued and the Notes shall not be so paid, the Governing body shall levy and collect a tax upon all taxable tangible property within the territorial limits of the City in an amount sufficient to pay the principal of and interest on said Notes as the same become due and payable.

Section Four. Form of Notes. Each of said Notes shall be in customary form as provided by law, shall be signed by the Mayor and attested by the City Clerk of the City and shall have the seal of said City affixed thereto.

Section Five. Execution and Delivery. The Mayor and City Clerk of the City are hereby authorized and directed to prepare and execute the Notes herein authorized in the form and substance hereinbefore described and as provided by law and to procure the proper registration in the office of the City Clerk and in the office of the Treasurer of the State of Kansas, and when so executed and registered, said Notes shall be countersigned by the City Clerk and delivered to United Missouri Bank, the original purchaser thereof, upon payment of the purchase price therefor which shall not be less than 99.885% of the principal amount thereof plus accrued interest to the date of delivery thereof to the original purchaser thereof.

Section Six. Disposition of Proceeds. The proceeds of the sale of the Notes shall be deposited with the City Treasurer to be used to redeem and retire the Prior Notes.

Section Seven. Tax Covenants. The City covenants and agrees that (1) it will comply with each and every provision of Section 103 and Sections 141 through 150 of the Internal Revenue Code of 1986, as amended (the "Code"), that is or may become applicable to the Notes, necessary to maintain the exclusion from gross income for federal income tax purposes of the interest on the Notes, including but not limited to any provisions requiring the rebate of earnings on amounts held in funds or accounts created with respect to the Notes and (2) it will not use or permit the use of any of the proceeds of the Notes or other funds of the City nor take or permit any other action, or fail to take any action, if any such action or failure to act would adversely affect the exclusion from gross income for federal income tax purposes of the interest on the Notes; provided, however, the foregoing provision in (1) above shall be and become null and void if and to the extent that the City shall receive an opinion from nationally recognized bond counsel which concludes that compliance with the foregoing covenant and the provisions of the Code as provided in this section shall not be required to maintain and continue the tax-exempt status of the interest income on the Notes.

Section Eight. Further Authority. The duly elected and appointed officers of the City, including the Mayor, the City Clerk and the Finance Director, are hereby further authorized and directed to execute all documents and take such actions as they may deem necessary or advisable in order to carry out and perform the purposes of this Ordinance and to make ministerial alterations, changes or additions in the foregoing agreements, statements, instruments and other documents herein approved, authorized and confirmed which they may approve, and the execution or taking of such action shall be conclusive evidence of such necessity or advisability.

Section Nine. Effective Date. That this Ordinance shall take effect and be in force after its publication as provided by law.

PASSED by the Council the 4th day of November, 1996.

APPROVED by the Mayor the 4th day of November, 1996.

(SEAL)

Marcia Rinehart, Mayor

ATTEST:

Martha Heizer, City Clerk

APPROVED FOR FORM:

R. S. Wetzler, City Attorney

WII:tnr108

ORD1619

Publication Fees: $100.17

The Legal Record
600 E. Santa Fe, Suite 4
Olathe, KS 66061-3700

CITY OF LEAWOOD
ATTN: MARTHA HEIZER
4800 TOWN CENTER DR
LEAWOOD, KS 66211

Proof of Publication

STATE OF KANSAS, JOHNSON COUNTY, SS;
Tammy Schwien, of lawful age, being first duly sworn, deposes and says that she is Legal Notices Administrator of The Legal Record which is a newspaper printed in the State of Kansas, published in and of general paid circulation on a weekly, monthly or yearly basis in Johnson County, Kansas, is not a trade, religious or fraternal publication, is published at least weekly fifty (50) times a year, has been so published continuously and uninterrupted in said County and State for a period of more than five (5) years prior to the first publication of the notice attached, and has been admitted at the post office as second class matter (now called periodicals class).
That a notice was published in all editions of the regular and entire issue for the following subject matter (also identified by the following case number, if any) for 1 consecutive week(s), as follows:

ORDINANCE NO. 1619--11/5/96

Tammy Schwien
Legal Notices Administrator

Subscribed and sworn to before me on this date:
November 6, 1996

Debra Dziadura
Notary Public

DEBRA DZIADURA
Notary Public - State of Kansas

My appointment expires: August 21, 1999.

$100.17

ORDINANCE NO. 1619

First published in The Legal Record, Tuesday, November 5, 1996.

ORDINANCE NO. 1619

AN ORDINANCE AUTHORIZING AND PROVIDING FOR THE ISSUANCE AND DELIVERY OF TEMPORARY NOTES, PROJECT 108 (COLLEGE BOULEVARD), OF THE CITY OF LEAWOOD, KANSAS, IN THE PRINCIPAL AMOUNT OF $3,800,000 TO PROVIDE TEMPORARY FINANCING OF THE COST OF IMPROVEMENT OR REIMPROVEMENT OF COLLEGE BOULEVARD, INCLUDING GRADING, REGRADING, CURBING, RECURBING, GUTTERING, REGUTTERING, PAVING, REPAVING, MACADAMIZING, REMACADAMIZING, CONSTRUCTING, RECONSTRUCTING, OPENING, WIDENING, EXTENDING, ROUNDING CORNERS, STRAIGHTENING, RELOCATING, CONSTRUCTION OR RECONSTRUCTION OF ANY NECESSARY BRIDGES AND APPROACHES THERETO, VIADUCTS, OVERPASSES, UNDERPASSES, CULVERTS, STORM DRAINAGE, TRAFFICWAY ILLUMINATION, TRAFFIC CONTROL DEVICES, PEDESTRIAN WAYS, BICYCLE WAYS OR OTHER IMPROVEMENTS AND OTHER INCIDENTAL CONSTRUCTION COSTS, IN THE CITY OF LEAWOOD.

WHEREAS, pursuant to K.S.A. 12-685, et seq., as amended, and Ordinance No. 1488, the Governing Body of the City of Leawood, Kansas (the "City") has heretofore authorized the following described improvement project within the City, to wit: the improvement or reimprovement of College Boulevard located within the City of Leawood (the "Project") at an estimated cost of $13,795,873.00; and

WHEREAS, the Project has been commenced and the City has heretofore issued its Temporary Notes, Project 108 (College Blvd.), dated March 1, 1996, in the principal amount of $3,800,000 (the "Prior Notes") to provide funds to pay the costs of the Project heretofore incurred by the City; and

WHEREAS, said Prior Notes become due and payable in the immediate future but all aspects of the Project will not be completed at the date of maturity thereof; and

WHEREAS, the City is authorized by law and in particular K.S.A. 10-123, as amended, to issue temporary notes of the City to provide funds to redeem and pay the Prior Notes as the same become due and payable.

NOW, THEREFORE, BE IT ORDAINED BY THE GOVERNING BODY OF THE CITY OF LEAWOOD, KANSAS, AS FOLLOWS:

Section One. Authorization of Notes. That in order to provide funds to redeem and pay the Prior Notes to become due in the immediate future, there shall be issued and the City is hereby authorized to issue temporary notes of the City, designated City of Leawood, Kansas, Temporary Notes, Project 108 (College Blvd.), in the aggregate principal amount of Three Million Eight Hundred Thousand Dollars ($3,800,000.00) (the "Notes"). The amount of the Notes together with other temporary notes heretofore issued to finance the Project which remain outstanding does not exceed the total estimated costs of said Project.

Section Two. Terms of the Notes. Said issue of Notes shall consist of bearer notes numbered 1 through 38 inclusive, each in the denomination of $100,000. Each of said notes shall be dated November 11, 1996, shall mature by their stated terms and become due and payable on August 7, 1997. The Notes shall bear interest from their dated date, payable at maturity or upon redemption prior thereto as herein provided, at a rate of interest of 3.80% per annum (computed on the basis of actual days elapsed and a 360-day year composed of twelve 30-day months). The Notes shall be subject to redemption at the option of the City upon notice as hereinafter provided and shall be redeemed and cancelled contemporaneously with the issuance of general obligation improvement bonds of the City issued in lieu thereof to provide permanent financing of the Project.

Both principal of and interest on said Notes shall be payable in lawful money of the United States of America by check or draft at the office of the City Treasurer of the City upon presentation and surrender of said Notes.

The City reserves the right to redeem and pay said Notes, in whole or in part (and if in part in denominations of $100,000 selected by the City in its sole discretion), at any date prior to the stated maturity of said Notes by notice thereof given in writing by first class mail to the original purchaser of the Notes and to any known holder of the Notes or by the publication of such notice at least one time in a newspaper published or of general circulation in the metropolitan Kansas City area, and payment of said Notes, such publication of such notice or mailing of written notification of redemption to the original purchaser and the known holder to be at least ten days prior to the redemption date fixed in such notice. Notice of such redemption having been given as aforesaid, interest shall cease to accrue on said Notes from and after the redemption date.

Section Three. Security for the Notes. The full faith, credit and resources of the City of Leawood, Kansas, shall be and the same are hereby irrevocably pledged for the prompt payment of the principal of and interest on the Notes.

The Governing Body of the City shall make provisions for the payment of said Notes by the issuance of renewal notes or general obligation bonds of the City to provide permanent financing of the Project upon the completion thereof. If said bonds shall not be so issued and the Notes shall not be so paid, the Governing body shall levy and collect a tax upon all taxable tangible property within the territorial limits of the City in an amount sufficient to pay the principal of and interest on said Notes as the same become due and payable.

Section Four. Form of Notes. Each of said Notes shall be in customary form as provided by law, shall be signed by the Mayor and attested by the City Clerk of the City and shall have the seal of said City affixed thereto.

CONTINUED ON PAGE 23 A

CONTINUED FROM PAGE 22 A

Section Five. Execution and Delivery The Mayor and City Clerk of the City are hereby authorized and directed to prepare and execute the Notes herein authorized in the form and substance hereinbefore described and as provided by law and to procure the proper registration in the office of the City Clerk and in the office of the Treasurer of the State of Kansas, and when so executed and registered, said Notes shall be countersigned by the City Clerk and delivered to United Missouri Bank, the original purchaser thereof, upon payment of the purchase price therefor which shall not be less than 99.885% of the principal amount thereof plus accrued interest to the date of delivery thereof to the original purchaser thereof.

Section Six. Disposition of Proceeds. The proceeds of the sale of the Notes shall be deposited with the City Treasurer to be used to redeem and retire the Prior Notes.

Section Seven. Tax Covenants. The City covenants and agrees that (1) it will comply with each and every provision of Section 103 and Sections 141 through 150 of the Internal Revenue Code of 1986, as amended (the "Code"), that is or may become applicable to the Notes, necessary to maintain the exclusion from gross income for federal income tax purposes of the interest on the Notes, including but not limited to any provisions requiring the rebate of earnings on amounts held in funds or accounts created with respect to the Notes and (2) it will not use or permit the use of any of the proceeds of the Notes or other funds of the City nor take or permit any other action, or fail to take any action, if any such action or failure to act would adversely affect the exclusion from gross income for federal income tax purposes of the interest on the Notes; provided, however, the foregoing provision in (1) above shall be and become null and void if and to the extent that the City shall receive an opinion from nationally recognized bond counsel which concludes that compliance with the foregoing covenant and the provisions of the Code as provided in this section shall not be required to maintain and continue the tax-exempt status of the interest income on the Notes.

Section Eight. Further Authority. The duly elected and appointed officers of the City, including the Mayor, the City Clerk and the Finance Director, are hereby further authorized and directed to execute all documents and take such actions as they may deem necessary or advisable in order to carry out and perform the purposes of this Ordinance and to make ministerial alterations, changes or additions in the foregoing agreements, statements, instruments and other documents herein approved, authorized and confirmed which they may approve, and the execution or taking of such action shall be conclusive evidence of such necessity or advisability.

Section Nine. Effective Date. That this Ordinance shall take effect and be in force after its publication as provided by law.

PASSED by the Council the 4th day of November, 1996.

APPROVED by the Mayor the 4th day of November, 1996.

(S E A L)

Marcia Rinehart

Marcia Rinehart, Mayor

ATTEST:

Martha Heizer

Martha Heizer, City Clerk

APPROVED FOR FORM:

D. S. Wetzler, City Attorney

WII:tnr108

ORDINANCE NO. 1618

AN ORDINANCE ACCEPTING DEEDS FROM THE HIGHLANDS OF LEAWOOD SUBDIVISION, CONVERTING PRIVATE STREETS IN THE SUBDIVISION TO PUBLIC STREETS.

WHEREAS, the Highlands of Leawood, a subdivision in the City of Leawood (hereinafter the "Highlands") was originally developed as a subdivision served by private streets; and

WHEREAS, the owners of property in the Highlands desire to make the streets of the Highlands public; and

WHEREAS, the owners of property in the Highlands have provided deeds to the City conveying to the City of Leawood their respective interests in those portions of their properties that have been to the current date used as private streets; and

WHEREAS, the owners of properties in the Highlands have requested the City to accept the deeds dedicating the tracts of ground described in said deeds for use by the City as public right of way; and

WHEREAS, the City has agreed to accept the tracts of ground specifically described in Deeds of Dedication for the use of the City as public right of way;

NOW, THEREFORE, BE IT ORDAINED BY THE GOVERNING BODY OF THE CITY OF LEAWOOD:

Section 1. That the City of Leawood hereby accepts deeds from the following property owners in the Highlands of Leawood, a subdivision in the City of Leawood, and accepts the tracts of ground, as specifically described in said deeds and previously used as private streets, as public streets to be maintained by the City of Leawood:

Robert J.S. Galvin	Lot 51, 1st Plat
Gary M. and Betsy M. Kramer	Lot 144, 2nd Plat
Carlos R. and Carmen A. Pinedo	Lot 130, 2nd Plat
Ronald L. and Denise L. Geraci	Lot 153, 4th Plat
Gerald W. and Vicki O. Lawson	Lot 6, 1st Plat
Thomas E. and Shari L. Wilkins	Lot 10, 1st Plat
Melvyn and Carol Weissman	Lot 146, 2nd Plat
Vincent P. and Rebecca K. Watson	Lot 61, 1st Plat
Douglas M. and Susan H. Swanson	Lot 57, 1st Plat
Norman F. Schram	Lot 50, 1st Plat
Jesse D. and Lee Paul	Lot 52, 1st Plat
Steven A. and Elizabeth J. Mandracchia	Lot 21, 1st Plat

Aaron D. Hyde and Mary T. Baldi	Lot 98, 2nd Plat
Wilhelmina S. Loving, et al	Lot 58, 1st Plat
Steven C. and Marceia Fisher	Lot 145, 2nd Plat
William C. and Cynthia K. Dippel	Lot 56, 1st Plat
Timothy L. and Christine A. Blackburn, Trustees	Lot 3, 5th Plat
Alex M. and Myrtle B. Sokol	Lot 55, 1st Plat
Gladys and Grady Wayne	Lot 84, 2nd Plat
Marc A. Slotnick	Lot 148, 2nd Plat
James L. and Katrina J. Byram	Lot 19, 1st Plat
William J. and Ann N. McGah	Lot 53, 1st Plat
Mark W. and Nancy P. Cowing	Lot 103, 2nd Plat
Scott A. and Sarah A. Glasrud	Lot 113, 2nd Plat
Warren L. and Jane Kleinsasser	Lot 77, 1st Plat
Nicholas C. Vedros	Lot 139, 2nd Plat
William J. Wood and Annie Brossard	Lot 129, 2nd Plat
Paul B. Blankenmeister and Shelley Mueller	Lot 49, 1st Plat
Margaret McNerney	Lot 44, 1st Plat
Highlands of Leawood Homes Assoc.	Tract D, 1st Plat
Highlands of Leawood Homes Assoc.	Tract E, 1st Plat
Highlands of Leawood Homes Assoc.	Tract H, 2nd Plat
Highlands of Leawood Homes Assoc.	Tract G, 2nd Plat
Highlands of Leawood Homes Assoc.	Tract A, 1st Plat
Highlands of Leawood Homes Assoc.	Tract C, 1st Plat
Highlands of Leawood Homes Assoc.	Tract I, 2nd Plat
Pine Development, Donald R. Elbel, Jr.	Lot 132, 2nd Plat
Pine Development, Donald R. Elbel, Jr.	Lot 152, 4th Plat
Pine Development, Donald R. Elbel, Jr.	Lot 151, 4th Plat
Richard P. and Shena A. Baylog	Lot 23, 1st Plat
Joseph W. and E. Suzanne Brickell	Lot 3, 1st Plat
Kenneth L. Coffelt and Martha A. Greene	Lot 9, 1st Plat
Timothy J. and Juliana L. Companey	Lot 8, 1st Plat
Richard L. and Jill M. Day	Lot 141, 2nd Plat
Glenn C. and Joyce L. Donnelly	Lot 2, 3rd Plat
Walter and Kathy J. Hagen	Lot 110, 2nd Plat
Lisa D. Kelly	Lot 24, 1st Plat
Lon L. and Linda J. Kohler	Lot 30, 1st Plat
Karl D. and Nancy C. Kramer	Lot 70, 1st Plat
Martin J. and Jane Meulendyke	Lot 138, 2nd Plat
Richard C. and Leslie A. Miller	Lot 4, 3rd Plat
Robert A. and Patricia I. Ponath	Lot 27, 1st Plat
Joseph J. and Lynn H. Roh	Lot 41, 1st Plat

Maureen A. Taylor	Lot 32, 1st Plat
Samuel R. and Amie M. Taylor	Lot 106, 2nd Plat
Robert B. and Penny S. Terry	Lot 124, 2nd Plat
John L. and Judith A. Pearson	Lot 88, 2nd Plat
Mark D. Hanna	Lot 149, 2nd Plat
Gordon R. and Joni S. Hanebutt	Lot 11, 1st Plat
Robert and Mary Holcomb	Lot 66, 1st Plat
Michael W. and Brenda A. Upchurch	Lot 85, 2nd Plat
Jeffrey L. Henderson	Lot 107, 2nd Plat
John M. and Suzanne A. Holt	Lot 112, 2nd Plat
Joseph A. and Barbara A. Lewis	Lot 147, 2nd Plat
James A. and Kathryn A. Penrod	Lot 79, 2nd Plat
Kris I. and Glenda L. Johnson	Lot 150, 2nd Plat
John J. and Deborah S. Crow	Lot 29, 1st Plat
James S. and Gail P. Appelbaum	Lot 4, 5th Plat
James R. and Debbie D. Azeltine	Lot 140, 2nd Plat
Jeff T. andd Virginia A. Bailey	Lot 80, 2nd Plat
Thomas S. and Patricia J. Bartoszewski	Lot 2, 1st Plat
Stephen R. and Susan E. Battreall	Lot 71, 1st Plat
Michael T. and Rita M. Beach	Lot 91, 2nd Plat
Alvin S. and Barbara J. Beitchman	Lot 54, 1st Plat
Jerome P. and Kathleen A. Berwanger	Lot 72, 1st Plat
Philip G. and Catherine F. Black	Lot 105, 2nd Plat
J. Russell and Naomi J. Boersma	Lot 63, 1st Plat
Vincent G. and Valerie A. Burke	Lot 76, 1st Plat
James H. and Cathy S. Butler	Lot 12, 1st Plat
Tony and Tammy S. Caloroso	Lot 104, 2nd Plat
Brian W. and Kimberly K. Campbell	Lot 25, 1st Plat
Joseph J. and Linda M. Canny	Lot 1, 3rd Plat
Thomas and Margaret M. Carroll	Lot 99, 2nd Plat
Frank and Crystie Ciriello	Lot 127, 2nd Plat
Rodney J. and Mary B. Cooper	Lot 5, 3rd Plat
Ray E. and Jan M. Cullings	Lot 42, 1st Plat
Paul V. and Elaine W. Daly	Lot 118, 2nd Plat
Thomas S. and Wenda L. Davis	Lot 100, 2nd Plat
Gary M. and Sara A. Delnero	Lot 64, 1st Plat
Joseph G. and Madeleine M. Diab	Lot 114, 2nd Plat
James E. and Nancy D. Driscoll	Lot 125, 2nd Plat
Larry D. and Bonnie K. Fears	Lot 131, 2nd Plat
Barbara A. Fishburn	Lot 126, 2nd Plat
Cary A. and Cynthia P. Fox	Lot 20, 1st Plat
Thomas L. and Kimberly Galbraith	Lot 117, 2nd Plat
Jeffrey P. and Rhonda J. Fromm	Lot 122, 2nd Plat
Ronald E. and Karen B. Geir	Lot 123, 2nd Plat
Vincent C. and Kathleen Gigliotti	Lot 43, 1st Plat
Edy U. Ikenokwalu-Hinton	Lots 142, 143, 2nd Plat

Debra R. Goldstein, Trustee	Lot 142, 2nd Plat
Michael D. and Beth A. Guyer	Lot 59, 1st Plat
Michael J. and Theresa H. Harjung	Lot 45, 1st Plat
Edmund C. and Patricia A. Horst	Lot 47, 1st Plat
Frederic J. and Janine M. Hron	Lot 87, 2nd Plat
Philip D. and Karen E. Jones	Lot 109, 2nd Plat
Bernard O. and Janice M. Judy	Lot 31, 1st Plat
Sarah R. Keithley	Lot 48, 1st Plat
Olenda S. Knowles and Diane M. Tenny	Lot 15, 1st Plat
Jeffrey R. and Nancy E. Lang	Lot 81, 2nd Plat
Stephen E. and Basilla E. Langley	Lot 60, 1st Plat
Dennis W. and Elizabeth D. Lee	Lot 3, 3rd Plat
John D. and Margaret Lee	Lot 89, 2nd Plat
Arthur E. and Cynthia Liebenthal	Lot 17, 1st Plat
Richard G. and Susan M. Luse	Lot 16, 1st Plat
Martin B. and Kathleen M. Lusk	Lot 119, 2nd Plat
Joseph F. and Deborah S. Maranto	Lot 18, 1st Plat
Korb W. and Cathy L. Maxwell	Lot 26, 1st Plat
Vicki S. McCluggage	Lot 7, 1st Plat
Miles and Laurie M. McMillin	Lot 108, 2nd Plat
C. Roy and Roberta A. Messick	Lot 115, 2nd Plat
John W. and Paula Murray	Lot 111, 2nd Plat
Stephen A. and Katherine Z. Oliver	Lot 78, 1st Plat
James A. and Randall H. Perdew	Lot 121, 2nd Plat
Gregory P. and Kathleen Orscheln	Lot 83, 2nd Plat
Monte K. and Susan L. Phipps	Lot 90, 2nd Plat
Nallu K. and Nallu H. Reddy	Lot 102, 2nd Plat
Claude J. and Janet W. Roque	Lot 69, 1st Plat
Steven J. and Amy L. Rosnick	Lot 68, 1st Plat
Judy K. Rush	Lot 33, 1st Plat
Stephen M. and Ann P. Ryan	Lot 2, 5th Plat
Marc A. and Barbara K. Schlosberg	Lot 86, 2nd Plat
Duane H. and Joyce L. Schulz	Lot 46, 1st Plat
Daryl W. and Sheila L. Seck	Lot 40, 1st Plat
Steven B. and Kathy R. Shapiro	Lot 1, 1st Plat
David R. and Jeana M. Shumate	Lot 28, 1st Plat
Gloria J. Smith, Trustee	Lot 4, 1st Plat
R. Bruce and Cynthia L. Stearns	Lot 120, 2nd Plat
James V. and Louise Stothard	Lot 97, 2nd Plat
John W. and Jo E. Sweatt	Lot 116, 2nd Plat
Drew S. and Ann K. Thompson	Lot 128, 2nd Plat
Wayne and Violet Thygesen	Lot 5, 1st Plat
Robert T. and Siew Choo L. Tung	Lot 22, 1st Plat
Mark S. and Nikki R. Tygard	Lot 65, 1st Plat
Lynn J. and Carol K. Wagner	Lot 62, 1st Plat
Michael D. and Jacqueline K. West	Lot 67, 1st Plat

Kenneth V. and Nancy J. Wilson	Lot 82, 2nd Plat
James C. and Betty Jean Wehrheim	Lot 1, 5th Plat
Yang Xiaoneng and Zhang Xiaoying	Lot 101, 2nd Plat

Section 2. That this ordinance shall take effect and be in force from and after its publication in the official City newspaper.

Passed by the Council the 21st day of October, 1996.

Approved by the Mayor the 21st day of October, 1996.

(S E A L)

Marcia Rinehart Mayor

Attest:

Martha Heizer City Clerk

APPROVED FOR FORM:

R.S. Wetzler City Attorney

ORDINANCE NO. 1618

AN ORDINANCE ACCEPTING DEEDS FROM THE HIGHLANDS OF LEAWOOD SUBDIVISION, CONVERTING PRIVATE STREETS IN THE SUBDIVISION TO PUBLIC STREETS.

WHEREAS, the Highlands of Leawood, a subdivision in the City of Leawood (hereinafter the "Highlands") was originally developed as a subdivision served by private streets; and

WHEREAS, the owners of property in the Highlands desire to make the streets of the Highlands public; and

WHEREAS, the owners of property in the Highlands have provided deeds to the City conveying to the City of Leawood their respective interests in those portions of their properties that have been to the current date used as private streets; and

WHEREAS, the owners of properties in the Highlands have requested the City to accept the deeds dedicating the tracts of ground described in said deeds for use by the City as public right of way; and

WHEREAS, the City has agreed to accept the tracts of ground specifically described in Deeds of Dedication for the use of the City as public right of way;

NOW, THEREFORE, BE IT ORDAINED BY THE GOVERNING BODY OF THE CITY OF LEAWOOD:

Section 1. That the City of Leawood hereby accepts deeds from the following property owners in the Highlands of Leawood, a subdivision in the City of Leawood, and accepts the tracts of ground, as specifically described in said deeds and previously used as private streets, as public streets to be maintained by the City of Leawood:

		Vol.	Pg.#
Robert J.S. Galvin	Lot 51, 1st Plat	5026	589
Gary M. and Betsy M. Kramer	Lot 144, 2nd Plat	5052	961
Carlos R. and Carmen A. Pinedo	Lot 130, 2nd Plat	5026	683
Ronald L. and Denise L. Geraci	Lot 153, 4th Plat	5026	719
Gerald W. and Vicki O. Lawson	Lot 6, 1st Plat	5052	921
Thomas E. and Shari L. Wilkins	Lot 10, 1st Plat	5026	547
Melvyn and Carol Weissman	Lot 146, 2nd Plat	5052	965
Vincent P. and Rebecca K. Watson	Lot 61, 1st Plat	5060	816
Douglas M. and Susan H. Swanson	Lot 57, 1st Plat	5051	921
Norman F. Schram	Lot 50, 1st Plat	5051	915
Jesse D. and Lee Paul	Lot 52, 1st Plat	5051	917
Steven A. and Elizabeth J. Mandracchia	Lot 21, 1st Plat	5051	909

		Vol.	Pg. #
Aaron D. Hyde and Mary T. Baldi	Lot 98, 2nd Plat	5060	820
Wilhelmina S. Loving, et al	Lot 58, 1st Plat	5060	814
Steven C. and Marceia Fisher	Lot 145, 2nd Plat	5052	963
William C. and Cynthia K. Dippel	Lot 56, 1st Plat	5051	919
Timothy L. and Christine A. Blackburn, Trustees	Lot 3, 5th Plat	5051	939
Alex M. and Myrtle B. Sokol	Lot 55, 1st Plat	5026	595
Gladys and Grady Wayne	Lot 84, 2nd Plat	5052	919
Marc A. Slotnick	Lot 148, 2nd Plat	5026	695
James L. and Katrina J. Byram	Lot 19, 1st Plat	5026	557
William J. and Ann N. McGah	Lot 53, 1st Plat	5026	591
Mark W. and Nancy P. Cowing	Lot 103, 2nd Plat	5052	935
Scott A. and Sarah A. Glasrud	Lot 113, 2nd Plat	5026	663
Warren L. and Jane Kleinsasser	Lot 77, 1st Plat	5052	927
Nicholas C. Vedros	Lot 139, 2nd Plat	5026	687
William J. Wood and Annie Brossard	Lot 129, 2nd Plat	5026	681
Paul B. Blankenmeister and Shelley Mueller	Lot 49, 1st Plat	5026	587
Margaret McNerney	Lot 44, 1st Plat	5059	858
Highlands of Leawood Homes Assoc.	Tract D, 1st Plat	5026	619
Highlands of Leawood Homes Assoc.	Tract E, 1st Plat	5026	621
Highlands of Leawood Homes Assoc.	Tract H, 2nd Plat	5026	703
Highlands of Leawood Homes Assoc.	Tract G, 2nd Plat	5026	701
Highlands of Leawood Homes Assoc.	Tract A, 1st Plat	5026	615
Highlands of Leawood Homes Assoc.	Tract C, 1st Plat	5026	617
Highlands of Leawood Homes Assoc.	Tract I, 2nd Plat	5026	705
Pine Development, Donald R. Elbel, Jr.	Lot 132, 2nd Plat	5052	957
Pine Development, Donald R. Elbel, Jr.	Lot 152, 4th Plat	5052	967
Pine Development, Donald R. Elbel, Jr.	Lot 151, 4th Plat	5026	717
Richard P. and Shena A. Baylog	Lot 23, 1st Plat	5026	561
Joseph W. and E. Suzanne Brickell	Lot 3, 1st Plat	5026	539
Kenneth L. Coffelt and Martha A. Greene	Lot 9, 1st Plat	5026	545
Timothy J. and Juliana L. Companey	Lot 8, 1st Plat	5026	543
Richard L. and Jill M. Day	Lot 141, 2nd Plat	5026	689
Glenn C. and Joyce L. Donnelly	Lot 2, 3rd Plat	5026	709
Walter and Kathy J. Hagen	Lot 110, 2nd Plat	5026	657
Lisa D. Kelly	Lot 24, 1st Plat	5026	563
Lon L. and Linda J. Kohler	Lot 30, 1st Plat	5026	571
Karl D. and Nancy C. Kramer	Lot 70, 1st Plat	5026	609
Martin J. and Jane Meulendyke	Lot 138, 2nd Plat	5026	685
Richard C. and Leslie A. Miller	Lot 4, 3rd Plat	5076	713
Robert A. and Patricia I. Ponath	Lot 27, 1st Plat	5026	567
Joseph J. and Lynn H. Roh	Lot 41, 1st Plat	5026	581

		Vol.	Pg. #
Maureen A. Taylor	Lot 32, 1st Plat	5050	556
Samuel R. and Amie M. Taylor	Lot 106, 2nd Plat	5052	939
Robert B. and Penny S. Terry	Lot 124, 2nd Plat	5026	677
John L. and Judith A. Pearson	Lot 88, 2nd Plat	5026	639
Mark D. Hanna	Lot 149, 2nd Plat	5026	697
Gordon R. and Joni S. Hanebutt	Lot 11, 1st Plat	5026	549
Robert and Mary Holcomb	Lot 66, 1st Plat	5026	605
Michael W. and Brenda A. Upchurch	Lot 85, 2nd Plat	5026	633
Jeffrey L. Henderson	Lot 107, 2nd Plat	5026	653
John M. and Suzanne A. Holt	Lot 112, 2nd Plat	5026	661
Joseph A. and Barbara A. Lewis	Lot 147, 2nd Plat	5026	693
James A. and Kathryn A. Penrod	Lot 79, 2nd Plat	5026	623
Kris I. and Glenda L. Johnson	Lot 150, 2nd Plat	5026	699
John J. and Deborah S. Crow	Lot 29, 1st Plat	5026	569
James S. and Gail P. Appelbaum	Lot 4, 5th Plat	5026	721
James R. and Debbie D. Azeltine	Lot 140, 2nd Plat	5052	959
Jeff T. andd Virginia A. Bailey	Lot 80, 2nd Plat	5026	625
Thomas S. and Patricia J. Bartoszewski	Lot 2, 1st Plat	5052	929
Stephen R. and Susan E. Battreall	Lot 71, 1st Plat	5026	611
Michael T. and Rita M. Beach	Lot 91, 2nd Plat	5026	643
Alvin S. and Barbara J. Beitchman	Lot 54, 1st Plat	5026	593
Jerome P. and Kathleen A. Berwanger	Lot 72, 1st Plat	5060	822
Philip G. and Catherine F. Black	Lot 105, 2nd Plat	5026	651
J. Russell and Naomi J. Boersma	Lot 63, 1st Plat	5026	601
Vincent G. and Valerie A. Burke	Lot 76, 1st Plat	5051	929
James H. and Cathy S. Butler	Lot 12, 1st Plat	5051	903
Tony and Tammy S. Caloroso	Lot 104, 2nd Plat	5052	937
Brian W. and Kimberly K. Campbell	Lot 25, 1st Plat	5060	810
Joseph J. and Linda M. Canny	Lot 1, 3rd Plat	5026	707
Thomas and Margaret M. Carroll	Lot 99, 2nd Plat	5051	931
Frank and Crystie Ciriello	Lot 127, 2nd Plat	5052	949
Rodney J. and Mary B. Cooper	Lot 5, 3rd Plat	5026	715
Ray E. and Jan M. Cullings	Lot 42, 1st Plat	5036	922
Paul V. and Elaine W. Daly	Lot 118, 2nd Plat	5026	671
Thomas S. and Wenda L. Davis	Lot 100, 2nd Plat	5026	647
Gary M. and Sara A. Delnero	Lot 64, 1st Plat	5026	603
Joseph G. and Madeleine M. Diab	Lot 114, 2nd Plat	5026	665
James E. and Nancy D. Driscoll	Lot 125, 2nd Plat	5026	679
Larry D. and Bonnie K. Fears	Lot 131, 2nd Plat	5052	955
Barbara A. Fishburn	Lot 126, 2nd Plat	5052	951
Cary A. and Cynthia P. Fox	Lot 20, 1st Plat	5051	907
Thomas L. and Kimberly Galbraith	Lot 117, 2nd Plat	5026	669
Jeffrey P. and Rhonda J. Fromm	Lot 122, 2nd Plat	5052	945
Ronald E. and Karen B. Geir	Lot 123, 2nd Plat	5052	947
Vincent C. and Kathleen Gigliotti	Lot 43, 1st Plat	5026	583
Edy U. Ikenokwalu-Hinton	Lots 142, 143, 2nd Plat	5060	812

		Vol.	Pg. #
Debra R. Goldstein, Trustee	Lot 142, 2nd Plat	5026	691
Michael D. and Beth A. Guyer	Lot 59, 1st Plat	5026	597
Michael J. and Theresa H. Harjung	Lot 45, 1st Plat	5051	911
Edmund C. and Patricia A. Horst	Lot 47, 1st Plat	5051	913
Frederic J. and Janine M. Hron	Lot 87, 2nd Plat	5026	637
Philip D. and Karen E. Jones	Lot 109, 2nd Plat	5052	941
Bernard O. and Janice M. Judy	Lot 31, 1st Plat	5026	573
Sarah R. Keithley	Lot 48, 1st Plat	5052	925
Olenda S. Knowles and Diane M. Tenny	Lot 15, 1st Plat	5026	551
Jeffrey R. and Nancy E. Lang	Lot 81, 2nd Plat	5026	627
Stephen E. and Basilla E. Langley	Lot 60, 1st Plat	5051	923
Dennis W. and Elizabeth D. Lee	Lot 3, 3rd Plat	5026	711
John D. and Margaret Lee	Lot 89, 2nd Plat	5052	931
Arthur E. and Cynthia Liebenthal	Lot 17, 1st Plat	5026	555
Richard G. and Susan M. Luse	Lot 16, 1st Plat	5026	553
Martin B. and Kathleen M. Lusk	Lot 119, 2nd Plat	5026	673
Joseph F. and Deborah S. Maranto	Lot 18, 1st Plat	5051	905
Korb W. and Cathy L. Maxwell	Lot 26, 1st Plat	5026	565
Vicki S. McCluggage	Lot 7, 1st Plat	5026	541
Miles and Laurie M. McMillin	Lot 108, 2nd Plat	5026	655
C. Roy and Roberta A. Messick	Lot 115, 2nd Plat	5051	933
John W. and Paula Murray	Lot 111, 2nd Plat	5026	659
Stephen A. and Katherine Z. Oliver	Lot 78, 1st Plat	5026	613
James A. and Randall H. Perdew	Lot 121, 2nd Plat	5052	943
Gregory P. and Kathleen Orscheln	Lot 83, 2nd Plat	5026	631
Monte K. and Susan L. Phipps	Lot 90, 2nd Plat	5026	641
Nallu K. and Nallu H. Reddy	Lot 102, 2nd Plat	5052	933
Claude J. and Janet W. Roque	Lot 69, 1st Plat	5051	927
Steven J. and Amy L. Rosnick	Lot 68, 1st Plat	5051	925
Judy K. Rush	Lot 33, 1st Plat	5026	577
Stephen M. and Ann P. Ryan	Lot 2, 5th Plat	5051	937
Marc A. and Barbara K. Schlosberg	Lot 86, 2nd Plat	5026	635
Duane H. and Joyce L. Schulz	Lot 46, 1st Plat	5026	585
Daryl W. and Sheila L. Seck	Lot 40, 1st Plat	5026	579
Steven B. and Kathy R. Shapiro	Lot 1, 1st Plat	5026	537
David R. and Jeana M. Shumate	Lot 28, 1st Plat	5052	923
Gloria J. Smith, Trustee	Lot 4, 1st Plat	5051	899
R. Bruce and Cynthia L. Stearns	Lot 120, 2nd Plat	5026	675
James V. and Louise Stothard	Lot 97, 2nd Plat	5026	645
John W. and Jo E. Sweatt	Lot 116, 2nd Plat	5026	667
Drew S. and Ann K. Thompson	Lot 128, 2nd Plat	5052	953
Wayne and Violet Thygesen	Lot 5, 1st Plat	5051	901
Robert T. and Siew Choo L. Tung	Lot 22, 1st Plat	5026	559
Mark S. and Nikki R. Tygard	Lot 65, 1st Plat	5060	818
Lynn J. and Carol K. Wagner	Lot 62, 1st Plat	5026	599
Michael D. and Jacqueline K. West	Lot 67, 1st Plat	5026	607

		Vol.	Pg. #
Kenneth V. and Nancy J. Wilson	Lot 82, 2nd Plat	5026	629
James C. and Betty Jean Wehrheim	Lot 1, 5th Plat	5051	935
Yang Xiaoneng and Zhang Xiaoying	Lot 101, 2nd Plat	5026	649

Section 2. That this ordinance shall take effect and be in force from and after its publication in the official City newspaper.

Passed by the Council the 21st day of October, 1996.

Approved by the Mayor the 21st day of October, 1996.

(S E A L)

Marcia Rinehart
Marcia Rinehart Mayor

Attest:

Martha Heizer
Martha Heizer City Clerk

APPROVED FOR FORM:
R.S. Wetzler City Attorney

ORD1618

Publication Fees: $69.81

The Legal Record
600 E. Santa Fe, Suite 4
Olathe, KS 66061-3700

CITY OF LEAWOOD
ATTN: MARTHA HEIZER
4800 TOWN CENTER DR
LEAWOOD, KS 66211

Proof of Publication

STATE OF KANSAS, JOHNSON COUNTY, SS;
Tammy Schwien, of lawful age, being first duly sworn, deposes and says that she is Legal Notices Administrator of The Legal Record which is a newspaper printed in the State of Kansas, published in and of general paid circulation on a weekly, monthly or yearly basis in Johnson County, Kansas, is not a trade, religious or fraternal publication, is published at least weekly fifty (50) times a year, has been so published continuously and uninterrupted in said County and State for a period of more than five (5) years prior to the first publication of the notice attached, and has been admitted at the post office as second class matter (now called periodicals class).
That a notice was published in all editions of the regular and entire issue for the following subject matter (also identified by the following case number, if any) for 1 consecutive week(s), as follows:

ORDINANCE NO. 1618--10/22/96

Tammy Schwien
Legal Notices Administrator

Subscribed and sworn to before me on this date:
October 23, 1996

Debra Dziadura
Notary Public

DEBRA DZIADURA
Notary Public - State of Kansas

My appointment expires: August 21, 1999.

$69.81

ORDINANCE NO. 1618

First published in The Legal Record, Tuesday, October 22, 1996.

ORDINANCE NO. 1618

AN ORDINANCE ACCEPTING DEEDS FROM THE HIGHLANDS OF LEAWOOD SUBDIVISION, CONVERTING PRIVATE STREETS IN THE SUBDIVISION TO PUBLIC STREETS.

WHEREAS, the Highlands of Leawood, a subdivision in the City of Leawood (hereinafter the "Highlands") was originally developed as a subdivision served by private streets; and

WHEREAS, the owners of property in the Highlands desire to make the streets of the Highlands public; and

WHEREAS, the owners of property in the Highlands have provided deeds to the City conveying to the City of Leawood their respective interests in those portions of their properties that have been to the current date used as private streets; and

WHEREAS, the owners of properties in the Highlands have requested the City to accept the deeds dedicating the tracts of ground described in said deeds for use by the City as public right of way; and

WHEREAS, the City has agreed to accept the tracts of ground specifically described in Deeds of Dedication for the use of the City as public right of way;

NOW, THEREFORE, BE IT ORDAINED BY THE GOVERNING BODY OF THE CITY OF LEAWOOD:

Section 1. That the City of Leawood hereby accepts deeds from the following property owners in the Highlands of Leawood, a subdivision in the City of Leawood, and accepts the tracts of ground, as specifically described in said deeds and previously used as private streets, as public streets to be maintained by the City of Leawood:

Robert J.S. Galvin	Lot 51, 1st Plat
Gary M. and Betsy M. Kramer	Lot 144, 2nd Plat
Carlos R. and Carmen A. Pinedo	Lot 130, 2nd Plat
Ronald L. and Denise L. Geraci	Lot 153, 4th Plat
Gerald W. and Vicki O. Lawson	Lot 6, 1st Plat
Thomas E. and Shari L. Wilkins	Lot 10, 1st Plat
Melvyn and Carol Weissman	Lot 146, 2nd Plat
Vincent P. and Rebecca K. Watson	Lot 61, 1st Plat
Douglas M. and Susan H. Swanson	Lot 57, 1st Plat
Norman F. Schram	Lot 50, 1st Plat
Jesse D. and Lee Paul	Lot 52, 1st Plat
Steven A. and Elizabeth J. Mandracchia	Lot 21, 1st Plat
Aaron D. Hyde and Mary T. Baldi	Lot 98, 2nd Plat
Wilhelmina S. Loving, et al	Lot 58, 1st Plat
Steven C. and Marceia Fisher	Lot 145, 2nd Plat
William C. and Cynthia K. Dippel	Lot 56, 1st Plat
Timothy L. and Christine A. Blackburn, Trustees	Lot 3, 5th Plat
Alex M. and Myrtle B. Sokol	Lot 55, 1st Plat
Gladys and Grady Wayne	Lot 84, 2nd Plat
Marc A. Slotnick	Lot 148, 2nd Plat
James L. and Katrina J. Byram	Lot 19, 1st Plat
William J. and Ann N. McGah	Lot 53, 1st Plat
Mark W. and Nancy P. Cowing	Lot 103, 2nd Plat
Scott A. and Sarah A. Glasrud	Lot 113, 2nd Plat
Warren L. and Jane Kleinsasser	Lot 77, 1st Plat
Nicholas C. Vedros	Lot 139, 2nd Plat
William J. Wood and Annie Brossard	Lot 129, 2nd Plat
Paul B. Blankenmeister and Shelley Mueller	Lot 49, 1st Plat
Margaret McNerney	Lot 44, 1st Plat
Highlands of Leawood Homes Assoc.	Tract D, 1st Plat
Highlands of Leawood Homes Assoc.	Tract E, 1st Plat
Highlands of Leawood Homes Assoc.	Tract H, 2nd Plat
Highlands of Leawood Homes Assoc.	Tract G, 2nd Plat
Highlands of Leawood Homes Assoc.	Tract A, 1st Plat
Highlands of Leawood Homes Assoc.	Tract C, 1st Plat
Highlands of Leawood Homes Assoc.	Tract I, 2nd Plat
Pine Development, Donald R. Elbel, Jr.	Lot 132, 2nd Plat
Pine Development, Donald R. Elbel, Jr.	Lot 152, 4th Plat
Pine Development, Donald R. Elbel, Jr.	Lot 151, 4th Plat
Richard P. and Shena A. Baylog	Lot 23, 1st Plat
Joseph W. and E. Suzanne Brickell	Lot 3, 1st Plat
Kenneth L. Coffelt and Martha A. Greene	Lot 9, 1st Plat
Timothy J. and Juliana L. Companey	Lot 8, 1st Plat
Richard L. and Jill M. Day	Lot 141, 2nd Plat
Glenn C. and Joyce L. Donnelly	Lot 2, 3rd Plat
Walter and Kathy J. Hagen	Lot 110, 2nd Plat
Lisa D. Kelly	Lot 24, 1st Plat
Lon L. and Linda J. Kohler	Lot 30, 1st Plat
Karl D. and Nancy C. Kramer	Lot 70, 1st Plat
Martin J. and Jane Meulendyke	Lot 138, 2nd Plat
Richard C. and Leslie A. Miller	Lot 4, 3rd Plat
Robert A. and Patricia I. Ponath	Lot 27, 1st Plat
Joseph J. and Lynn H. Roh	Lot 41, 1st Plat
Maureen A. Taylor	Lot 32, 1st Plat
Samuel R. and Amie M. Taylor	Lot 106, 2nd Plat
Robert B. and Penny S. Terry	Lot 124, 2nd Plat
John L. and Judith A. Pearson	Lot 88, 2nd Plat
Mark D. Hanna	Lot 149, 2nd Plat
Gordon R. and Joni S. Hanebutt	Lot 11, 1st Plat
Robert and Mary Holcomb	Lot 66, 1st Plat
Michael W. and Brenda A. Upchurch	Lot 85, 2nd Plat
Jeffrey L. Henderson	Lot 107, 2nd Plat
John M. and Suzanne A. Holt	Lot 112, 2nd Plat
Joseph A. and Barbara A. Lewis	Lot 147, 2nd Plat
James A. and Kathryn A. Penrod	Lot 79, 2nd Plat
Kris I. and Glenda L. Johnson	Lot 150, 2nd Plat
John J. and Deborah S. Crow	Lot 29, 1st Plat
James S. and Gail P. Appelbaum	Lot 4, 5th Plat
James R. and Debbie D. Azeltine	Lot 140, 2nd Plat
Jeff T. and Virginia A. Bailey	Lot 80, 2nd Plat
Thomas S. and Patricia J. Bartoszewski	Lot 2, 1st Plat
Stephen R. and Susan E. Battreall	Lot 71, 1st Plat
Michael T. and Rita M. Beach	Lot 91, 2nd Plat
Alvin S. and Barbara J. Beitchman	Lot 54, 1st Plat
Jerome P. and Kathleen A. Berwanger	Lot 72, 1st Plat
Philip G. and Catherine F. Black	Lot 105, 2nd Plat
J. Russell and Naomi J. Boersma	Lot 63, 1st Plat
Vincent G. and Valerie A. Burke	Lot 76, 1st Plat
James H. and Cathy S. Butler	Lot 12, 1st Plat
Tony and Tammy S. Caloroso	Lot 104, 2nd Plat
Brian W. and Kimberly K. Campbell	Lot 25, 1st Plat
Joseph J. and Linda M. Canny	Lot 1, 3rd Plat
Thomas and Margaret M. Carroll	Lot 99, 2nd Plat
Frank and Crystie Ciriello	Lot 127, 2nd Plat
Rodney J. and Mary B. Cooper	Lot 5, 3rd Plat
Ray E. and Jan M. Cullings	Lot 42, 1st Plat
Paul V. and Elaine W. Daly	Lot 118, 2nd Plat
Thomas S. and Wenda L. Davis	Lot 100, 2nd Plat
Gary M. and Sara A. Delnero	Lot 64, 1st Plat
Joseph G. and Madeleine M. Diab	Lot 114, 2nd Plat
James E. and Nancy D. Driscoll	Lot 125, 2nd Plat
Larry D. and Bonnie K. Fears	Lot 131, 2nd Plat
Barbara A. Fishburn	Lot 126, 2nd Plat
Cary A. and Cynthia P. Fox	Lot 20, 1st Plat
Thomas L. and Kimberly Galbraith	Lot 117, 2nd Plat
Jeffrey P. and Rhonda J. Fromm	Lot 122, 2nd Plat
Ronald E. and Karen B. Geir	Lot 123, 2nd Plat
Vincent C. and Kathleen Gigliotti	Lot 43, 1st Plat
Edy U. Ikenokwalu-Hinton	Lots 142, 143, 2nd Plat
Debra R. Goldstein, Trustee	Lot 142, 2nd Plat
Michael D. and Beth A. Guyer	Lot 59, 1st Plat
Michael J. and Theresa H. Harjung	Lot 45, 1st Plat
Edmund C. and Patricia A. Horst	Lot 47, 1st Plat
Frederic J. and Janine M. Hron	Lot 87, 2nd Plat
Philip D. and Karen E. Jones	Lot 109, 2nd Plat
Bernard O. and Janice M. Judy	Lot 31, 1st Plat
Sarah R. Keithley	Lot 48, 1st Plat
Olenda S. Knowles and Diane M. Tenny	Lot 15, 1st Plat
Jeffrey R. and Nancy E. Lang	Lot 81, 2nd Plat
Stephen E. and Basilla E. Langley	Lot 60, 1st Plat
Dennis W. and Elizabeth D. Lee	Lot 3, 3rd Plat
John D. and Margaret Lee	Lot 89, 2nd Plat
Arthur E. and Cynthia Liebenthal	Lot 17, 1st Plat
Richard G. and Susan M. Luse	Lot 16, 1st Plat
Martin B. and Kathleen M. Lusk	Lot 119, 2nd Plat
Joseph F. and Deborah S. Maranto	Lot 18, 1st Plat
Korb W. and Cathy L. Maxwell	Lot 26, 1st Plat
Vicki S. McCluggage	Lot 7, 1st Plat
Miles and Laurie M. McMillin	Lot 108, 2nd Plat
C. Roy and Roberta A. Messick	Lot 115, 2nd Plat
John W. and Paula Murray	Lot 111, 2nd Plat
Stephen A. and Katherine Z. Oliver	Lot 78, 1st Plat
James A. and Randall H. Perdew	Lot 121, 2nd Plat
Gregory P. and Kathleen Orscheln	Lot 83, 2nd Plat
Monte K. and Susan L. Phipps	Lot 90, 2nd Plat
Nallu K. and Nallu H. Reddy	Lot 102, 2nd Plat
Claude J. and Janet W. Roque	Lot 69, 1st Plat
Steven J. and Amy L. Rosnick	Lot 68, 1st Plat
Judy K. Rush	Lot 33, 1st Plat
Stephen M. and Ann P. Ryan	Lot 2, 5th Plat
Marc A. and Barbara K. Schlosberg	Lot 86, 2nd Plat
Duane H. and Joyce L. Schulz	Lot 46, 1st Plat
Daryl W. and Sheila L. Seck	Lot 40, 1st Plat
Steven B. and Kathy R. Shapiro	Lot 1, 1st Plat
David R. and Jeana M. Shumate	Lot 28, 1st Plat
Gloria J. Smith, Trustee	Lot 4, 1st Plat
R. Bruce and Cynthia L. Stearns	Lot 120, 2nd Plat
James V. and Louise Stothard	Lot 97, 2nd Plat
John W. and Jo E. Sweatt	Lot 116, 2nd Plat
Drew S. and Ann K. Thompson	Lot 128, 2nd Plat
Wayne and Violet Thygesen	Lot 5, 1st Plat
Robert T. and Siew Choo L. Tung	Lot 22, 1st Plat
Mark S. and Nikki R. Tygard	Lot 65, 1st Plat
Lynn J. and Carol K. Wagner	Lot 62, 1st Plat
Michael D. and Jacqueline K. West	Lot 67, 1st Plat
Kenneth V. and Nancy J. Wilson	Lot 82, 2nd Plat
James C. and Betty Jean Wehrheim	Lot 1, 5th Plat
Yang Xiaoneng and Zhang Xiaoying	Lot 101, 2nd Plat

Section 2. That this ordinance shall take effect and be in force from and after its publication in the official City newspaper.

Passed by the Council the 21st day of October, 1996.

Approved by the Mayor the 21st day of October, 1996.

(S E A L)

Marcia Rinehart
Marcia Rinehart Mayor

Attest:

Martha Heizer
Martha Heizer City Clerk

APPROVED FOR FORM:

R/S Wetzler
City Attorney

ORDINANCE NO. 1617

AN ORDINANCE ADOPTING AN AMENDMENT TO THE LEAWOOD, KANSAS, 1993 MASTER DEVELOPMENT PLAN MAP.

WHEREAS, the Plan commission of the City of Leawood has previously adopted the Master Development Plan Map for the City pursuant to the authority granted by Kansas Statutes; and

WHEREAS, a certified copy of the Master Development Plan Map, adopted by the Plan Commission, was adopted by the Governing Body December 21, 1992; and

WHEREAS, pursuant to K.S.A. 12-747, the Master Development Plan Map adopted by the Plan Commission and any current amendments must be adopted by the Governing Body prior to its becoming effective; and

WHEREAS, a certified copy of the Amendment to the 1993 Master Development Plan Map as adopted by the Plan Commission on September 24, 1996, together with written summary of the Public Hearing thereon, have been submitted to the Governing Body;

NOW, THEREFORE, BE IT ORDAINED BY THE GOVERNING BODY OF THE CITY OF LEAWOOD:

Section 1. That the Governing Body of the City of Leawood, Kansas, hereby adopts Amendment to the 1993 Master Development Plan Map. The adopted amendment to the 1993 Master Development Plan Map modifies the Plan Map by redesignating a tract, approximately 13.0 acres in size, located at approximately 126th and Nall, commonly referred to as the McKee Property, from Medium Density Residential- Single Family Attached to Open Space - Public.

Section 2. That there is hereby incorporated by reference the above-described amendment to the 1993 Master Development Plan Map, adopted by the Plan Commission of the City of Leawood on September 24, 1996, and adopted by the Governing Body on October 21, 1996, as set forth in Section 1 of this ordinance, such incorporation by reference being authorized by K.S.A. 12-3009 to and including 12-3012. Not less than three (3) copies of the Ordinance, to each of which shall be attached a copy of the Master Development Plan Map, 1993 Amendment, as adopted October 21, 1996, marked as or stamped "Official copy", shall be filed with the City Clerk to be open to inspection and available to the public at all reasonable business hours.

Section 3. That this ordinance shall take effect and be in force from and after its publication in the official City newspaper.

Passed by the Council the 21st day of October, 1996.

Approved by the Mayor the 21st day of October, 1996.

(S E A L)

Marcia Rinehart
Marcia Rinehart Mayor

Attest:

Martha Heizer
Martha Heizer City Clerk

APPROVED FOR FORM:
R. S. Wetzler City Attorney

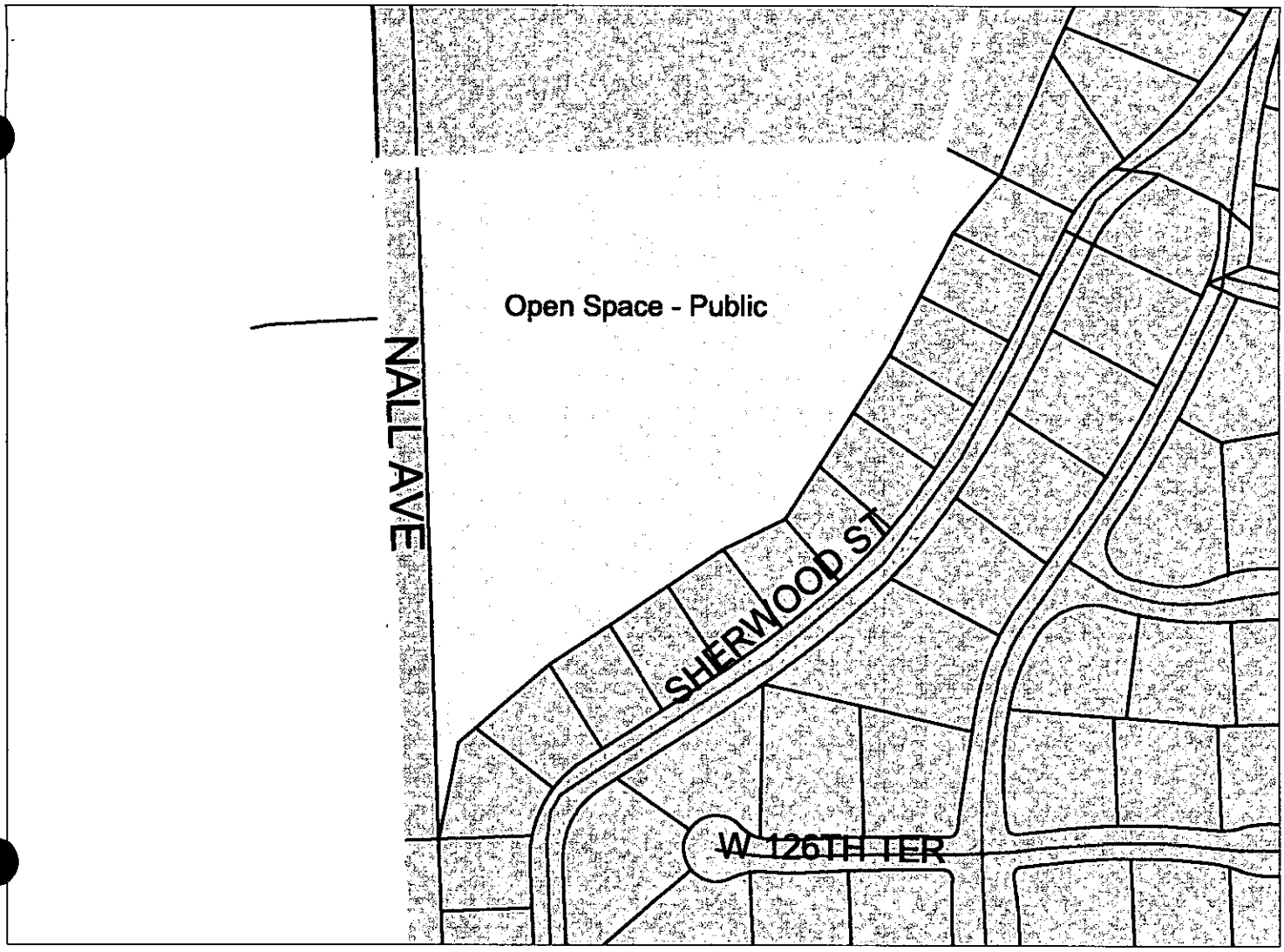

126th and Nall

Original Land Use: Medium Density Residential-
Single Family Attached

Modified Land Use: Open Space - Public

Acreage: 13.1

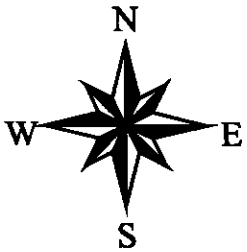

ORD1617

Publication Fees: $21.45

ORDINANCE NO. 1617

First published in The Legal Record, Tuesday, October 22, 1996.

ORDINANCE NO. 1617

AN ORDINANCE ADOPTING AN AMENDMENT TO THE LEAWOOD, KANSAS, 1993 MASTER DEVELOPMENT PLAN MAP.

WHEREAS, the Plan commission of the City of Leawood has previously adopted the Master Development Plan Map for the City pursuant to the authority granted by Kansas Statutes; and

WHEREAS, a certified copy of the Master Development Plan Map, adopted by the Plan Commission, was adopted by the Governing Body December 21, 1992; and

WHEREAS, pursuant to K.S.A. 12-747, the Master Development Plan Map adopted by the Plan Commission and any current amendments must be adopted by the Governing Body prior to its becoming effective; and

WHEREAS, a certified copy of the Amendment to the 1993 Master Development Plan Map as adopted by the Plan Commission on September 24, 1996, together with written summary of the Public Hearing thereon, have been submitted to the Governing Body;

NOW, THEREFORE, BE IT ORDAINED BY THE GOVERNING BODY OF THE CITY OF LEAWOOD:

Section 1. That the Governing Body of the City of Leawood, Kansas, hereby adopts Amendment to the 1993 Master Development Plan Map. The adopted amendment to the 1993 Master Development Plan Map modifies the Plan Map by redesignating a tract, approximately 13.0 acres in size, located at approximately 126th and Nall, commonly referred to as the McKee Property, from Medium Density Residential- Single Family Attached to Open Space - Public.

Section 2. That there is hereby incorporated by reference the above-described amendment to the 1993 Master Development Plan Map, adopted by the Plan Commission of the City of Leawood on September 24, 1996, and adopted by the Governing Body on October 21, 1996, as set forth in Section 1 of this ordinance, such incorporation by reference being authorized by K.S.A. 12-3009 to and including 12-3012. Not less than three (3) copies of the Ordinance, to each of which shall be attached a copy of the Master Development Plan Map, 1993 Amendment, as adopted October 21, 1996, marked as or stamped "Official copy", shall be filed with the City Clerk to be open to inspection and available to the public at all reasonable business hours.

Section 3. That this ordinance shall take effect and be in force from and after its publication in the official City newspaper.

Passed by the Council the 21st day of October, 1996.

Approved by the Mayor the 21st day of October, 1996.

(SEAL)

Marcia Rinehart
Marcia Rinehart — Mayor

Attest:

Martha Heizer
Martha Heizer — City Clerk

APPROVED FOR FORM:

R. S. Wetzler — City Attorney

The Legal Record
600 E. Santa Fe, Suite 4
Olathe, KS 66061-3700

CITY OF LEAWOOD
ATTN: MARTHA HEIZER
4800 TOWN CENTER DR
LEAWOOD, KS 66211

Proof of Publication

STATE OF KANSAS, JOHNSON COUNTY, SS:
Tammy Schwien, of lawful age, being first duly sworn, deposes and says that she is Legal Notices Administrator of The Legal Record which is a newspaper printed in the State of Kansas, published in and of general paid circulation on a weekly, monthly or yearly basis in Johnson County, Kansas, is not a trade, religious or fraternal publication, is published at least weekly fifty (50) times a year, has been so published continuously and uninterrupted in said County and State for a period of more than five (5) years prior to the first publication of the notice attached, and has been admitted at the post office as second class matter (now called periodicals class).
That a notice was published in all editions of the regular and entire issue for the following subject matter (also identified by the following case number, if any) for 1 consecutive week(s), as follows:

ORDINANCE NO. 1617--10/22/96

Tammy Schwien
Legal Notices Administrator

Subscribed and sworn to before me on this date:
October 23, 1996

Debra Dziadura
Notary Public

DEBRA DZIADURA
Notary Public - State of Kansas

My appointment expires: August 21, 1998

ORDINANCE NO. 1616 C

AN ORDINANCE AMENDING SECTION 11-606 OF THE CODE OF THE CITY OF LEAWOOD RELATING TO PENALTIES FOR DRUG OFFENSES.

Be it ordained by the Governing Body of the City of Leawood:

Section 1. Code Amended. That Section 11-606 of the Code of the City of Leawood is hereby amended to read as follows:

11-606. PENALTIES. A violation of any provision of this Article shall be punishable as a Class A violation as defined by the "Uniform Public Offense Code for Kansas Cities", 1996 Edition, as incorporated by reference by Section 11-101 of this Chapter.

Section 2. Repeal of Existing Section. That existing Section 11-606 of the Code of the City of Leawood is hereby repealed. (Prior law: Ord. No. 1521C)

Section 3. Take Effect. That this ordinance shall take effect and be in force from and after its publication in the official City newspaper.

Passed by the Council the 7th day of October, 1996.

Approved by the Mayor the 7th day of October, 1996.

(SEAL)

Marcia Rinehart
Marcia Rinehart Mayor

Attest:

Martha Heizer
Martha Heizer City Clerk

APPROVED AS TO FORM:
R.S. Wetzler City Attorney

ORD1616C

Publication Fees: $14.00

The Legal Record
600 E. Santa Fe, Suite 4
Olathe, KS 66061-3700

CITY OF LEAWOOD
ATTN: MARTHA HEIZER
4800 TOWN CENTER DR
LEAWOOD, KS 66211

Proof of Publication

STATE OF KANSAS, JOHNSON COUNTY, SS;
Tammy Schwien, of lawful age, being first duly sworn, deposes and says that she is Legal Notices Administrator of The Legal Record which is a newspaper printed in the State of Kansas, published in and of general paid circulation on a weekly, monthly or yearly basis in Johnson County, Kansas, is not a trade, religious or fraternal publication, is published at least weekly fifty (50) times a year, has been so published continuously and uninterrupted in said County and State for a period of more than five (5) years prior to the first publication of the notice attached, and has been admitted at the post office as second class matter (now called periodicals class).
That a notice was published in all editions of the regular and entire issue for the following subject matter (also identified by the following case number, if any) for 1 consecutive week(s), as follows:

ORDINANCE NO. 1616C--10/8/96

Tammy Schwien
Legal Notices Administrator

Subscribed and sworn to before me on this date:
October 9, 1996

Debra Dziadura
Notary Public

DEBRA DZIADURA
Notary Public - State of Kansas

My appointment expires: August 21, 1999.

ORDINANCE NO. 1616 C

First published in The Legal Record, Tuesday, October 8, 1996.

ORDINANCE NO. 1616 C

AN ORDINANCE AMENDING SECTION 11-606 OF THE CODE OF THE CITY OF LEAWOOD RELATING TO PENALTIES FOR DRUG OFFENSES.

Be it ordained by the Governing Body of the City of Leawood:

Section 1. Code Amended. That Section 11-606 of the Code of the City of Leawood is hereby amended to read as follows:

11-606. PENALTIES. A violation of any provision of this Article shall be punishable as a Class A violation as defined by the "Uniform Public Offense Code for Kansas Cities", 1996 Edition, as incorporated by reference by Section 11-101 of this Chapter.

Section 2. Repeal of Existing Section. That existing Section 11-606 of the Code of the City of Leawood is hereby repealed. (Prior law: Ord. No. 1521C)

Section 3. Take Effect. That this ordinance shall take effect and be in force from and after its publication in the official City newspaper.

Passed by the Council the 7th day of October, 1996.

Approved by the Mayor the 7th day of October, 1996.

(S E A L)

Marcia Rinehart
Marcia Rinehart Mayor

Attest:

Martha Heizer
Martha Heizer City Clerk

APPROVED AS TO FORM:
R.S. Wetzler
City Attorney

$14.00

ORDINANCE NO. 1615 C

AN ORDINANCE AMENDING SECTION 11-201 OF THE CODE OF THE CITY OF LEAWOOD RELATING TO PENALTIES FOR LOCAL PUBLIC OFFENSE VIOLATIONS.

Be it ordained by the Governing Body of the City of Leawood:

Section 1. Code Amended. That Section 11-201 of the Code of the City of Leawood is hereby amended to read as follows:

11-201. PENALTIES. Unless otherwise specified, the penalties for violation of any of the following sections will be classed in the manner set out in Article 12 of the "Uniform Public Offense Code for Kansas Cities", 1996 Edition, as incorporated by reference by Section 11-101 of this Chapter.

Section 2. Repeal of Existing Section. That existing Section 11-201 of the Code of the City of Leawood is hereby repealed. (Prior law: Ord. No. 1520C)

Section 3. Take Effect. That this ordinance shall take effect and be in force from and after its publication in the official City newspaper.

Passed by the Council the 7th day of October, 1996.

Approved by the Mayor the 7th day of October, 1996.

(S E A L)

Marcia Rinehart Mayor

Attest:

Martha Heizer City Clerk

APPROVED AS TO FORM:

R.S. Wetzler City Attorney

ORD1615C

Publication Fees: $14.91

The Legal Record
600 E. Santa Fe, Suite 4
Olathe, KS 66061-3700

CITY OF LEAWOOD
ATTN: MARTHA HEIZER
4800 TOWN CENTER DR
LEAWOOD, KS 66211

Proof of Publication

STATE OF KANSAS, JOHNSON COUNTY, SS;
Tammy Schwien, of lawful age, being first duly sworn, deposes and says that she is Legal Notices Administrator of The Legal Record which is a newspaper printed in the State of Kansas, published in and of general paid circulation on a weekly, monthly or yearly basis in Johnson County, Kansas, is not a trade, religious or fraternal publication, is published at least weekly fifty (50) times a year, has been so published continuously and uninterrupted in said County and State for a period of more than five (5) years prior to the first publication of the notice attached, and has been admitted at the post office as second class matter (now called periodicals class).
That a notice was published in all editions of the regular and entire issue for the following subject matter (also identified by the following case number, if any) for 1 consecutive week(s), as follows:

ORDINANCE NO. 1615C--10/8/96

Tammy Schwien
Legal Notices Administrator

Subscribed and sworn to before me on this date:
October 9, 1996

Debra Dziadura
Notary Public

DEBRA DZIADURA
Notary Public - State of Kansas

My appointment expires: August 21, 1999.

ORDINANCE NO. 1615 C

First published in The Legal Record, Tuesday, October 8, 1996.

ORDINANCE NO. 1615 C

AN ORDINANCE AMENDING SECTION 11-201 OF THE CODE OF THE CITY OF LEAWOOD RELATING TO PENALTIES FOR LOCAL PUBLIC OFFENSE VIOLATIONS.

Be it ordained by the Governing Body of the City of Leawood:

Section 1: Code Amended. That Section 11-201 of the Code of the City of Leawood is hereby amended to read as follows:

11-201. PENALTIES. Unless otherwise specified, the penalties for violation of any of the following sections will be classed in the manner set out in Article 12 of the "Uniform Public Offense Code for Kansas Cities", 1996 Edition, as incorporated by reference by Section 11-101 of this Chapter.

Section 2: Repeal of Existing Section. That existing Section 11-201 of the Code of the City of Leawood is hereby repealed. (Prior law: Ord. No. 1520C)

Section 3. Take Effect. That this ordinance shall take effect and be in force from and after its publication in the official City newspaper.

Passed by the Council the 7th day of October, 1996.

Approved by the Mayor the 7th day of October, 1996.

(S E A L)

Marcia Rinehart
Marcia Rinehart Mayor

Attest:

Martha Heizer
Martha Heizer City Clerk

APPROVED AS TO FORM: B.S. Wetzler City Attorney

$14.91

ORDINANCE NO. 1614 C

AN ORDINANCE ADOPTING THE 1996 EDITION OF THE "UNIFORM PUBLIC OFFENSE CODE FOR KANSAS CITIES".

Be it ordained by the Governing Body of the City of Leawood:

Section 1. Code Amended. That Article 1 of Chapter 11 ("Public Offenses") of the Code of the City of Leawood is hereby amended to read as follows:

ARTICLE 1. UNIFORM OFFENSE CODE

11-101. UNIFORM CODE INCORPORATED. There is hereby incorporated by reference the "Uniform Public Offense Code for Kansas Cities", 1996 Edition, prepared and published by the League of Kansas Municipalities, save and except such articles, sections, parts or portions as are hereafter omitted, deleted, modified or changed, such incorporation being authorized by K.S.A. 12-3009 through 12-3012, inclusive, as amended. No fewer than three copies of said uniform ordinance shall be marked or stamped "Official Copy", with all sections or portions thereof intended to be omitted or changed clearly marked to show any such omission or change and to which shall be attached a copy of this ordinance, and filed with the City Clerk to be open to inspection and available to the public at all reasonable hours.

11-102. SAME; AMENDMENT. Section 3.1 of the Uniform Code incorporated in Section 11-101 above is hereby amended to read as follows:

3.1 BATTERY.

(a) Battery is:

(1) Intentionally or recklessly causing bodily harm to another person; or

(2) Intentionally causing physical contact with another person when done in a rude, insulting or angry manner.

Battery is a Class B violation.

11-103. SAME. Section 6.16 of the Uniform Code incorporated in Section 11-101 above is hereby amended to read as follows:

6.16. GIVING A WORTHLESS CHECK

(a) Giving a worthless check is the making, drawing, issuing or delivering or causing or directing the making, drawing, issuing or delivering of any check, order or draft on any bank, credit union, savings and loan association or depository for the payment of money or its equivalent with intent to defraud and knowing, at the time of the making, drawing, issuing or delivering of such check, order or draft, that the maker or drawer has no deposit in or credits with the drawee or has not sufficient funds in, or credits with, the drawee for the payment of such check, order or draft in full upon its presentation.

(b) In any prosecution against the maker or drawer of a check, order or draft payment, of which has been refused by the drawee on account of insufficient funds, the making, drawing, issuing or delivering of such check shall be prima facie evidence of intent to defraud and of knowledge of insufficient funds in, or on deposit with, the drawee:

(1) unless the maker or drawer pays the holder thereof the amount due thereon and a service charge as established and in effect by adoption of the annual City fee resolution, within seven days after notice has been given to the maker or drawer that such check, draft or order has not been paid by the drawee. As used in this section, notice includes oral or written notice to the person entitled thereto. Written notice shall be presumed to have been given when deposited as restricted matter in the United States mail, addressed to the person to be given notice at such person's address as it appears on such check, draft or order; or

(2) if a postdated date is placed on the check, order or draft without the knowledge or consent of the payee.

(c) It shall not be a defense to a prosecution under this section that the check, draft or order upon which such prosecution is based:

(1) Was postdated, unless such check, draft or order was presented for payment prior to the postdated date; or

(2) Was given to a payee who had knowledge or had been informed, when the payee accepted the check, draft or order, that the maker did not have sufficient funds in the hands of the drawee to pay such check, draft or order upon presentation, unless such check, draft or order was presented for payment prior to the date the maker informed the payee there would be sufficient funds. (K.S.A. Supp. 21-3707, as amended)

Giving a worthless check is a Class A violation if the check, draft or order is drawn for less than $500 except when the person has, within five years immediately preceding commission of the offense, been convicted of giving a worthless check two or more times, in which case it is a felony under state statute.

11-104. SAME. Section 10.1 of the Uniform Code incorporated in Section 11-101 above is hereby amended to read as follows:

10.1. CRIMINAL USE OF WEAPONS.

(a) Criminal use of weapons is knowingly:

(1) Selling, manufacturing, purchasing, possessing or carrying any bludgeon, sand-club, metal knuckles, throwing star, or any knife, commonly referred to as a switch-blade, which has a blade that opens automatically by hand pressure applied to a button, spring or other device in the handle of the knife, or any knife having a blade that opens or falls or is ejected into position by the force of gravity or by an outward, downward, or centrifugal thrust or movement;

(2) Carrying concealed on one's person, or possessing with the intent to use the same unlawfully against another, a dagger, dirk, billy, blackjack, slingshot, dangerous knife, straight-edged razor, stiletto or any other dangerous or deadly weapon or instrument of like character, except that an ordinary pocket knife with no blade more than four inches in length shall not be construed to be dangerous knife, or a dangerous or deadly weapon or instrument;

(3) Carrying on one's person or in any land, water or air vehicle, with intent to use the same unlawfully, a tear gas or smoke bomb or projector or any object containing a noxious liquid, gas or substance;

(4) Carrying any pistol, revolver or other firearm:

(i) concealed on one's person except when on the person's land or in the person's abode or fixed place of business;

(ii) openly or visibly on the person at any place open to public view;

(iii) within the passenger compartment of any vehicle in transport unless the weapon is unloaded and in a case;

(5) Setting a spring gun;

(6) Possessing or transporting any incendiary or explosive material, liquid, solid or mixture, equipped with a fuse, wick or any other detonating device, commonly known as a molotov cocktail or a pipe bomb.

(b) Subsections (a) (a), (2), (3) and (4) shall not apply to or affect any of the following:

(1) Law enforcement officers, or any person summoned by any such officers to assist in making arrests or preserving the peace while actually engaged in assisting such officer;

(2) Wardens, superintendents, directors, security personnel and keepers of prisons, penitentiaries, jails and other institutions for the detention of persons accused or convicted of crime, while acting within the scope of their authority;

(3) Members of the armed services or reserve forces of the United States or the Kansas National Guard while in the performance of their official duty; or
(4) Manufacture of, transportation to, or sale of weapons to a person authorized under (b) (1) through (b) (3) of this section to possess such weapons.

(c) Subsection (a) (4) does not apply to or affect the following:
(1) Watchmen, while actually engaged in the performance of the duties of their employment;
(2) Licensed hunters while engaged in hunting;
(3) Private detectives licensed by the state to carry the firearm involved, while actually engaged in the duties of their employment;
(4) Detectives or special agents regularly employed by railroad companies or other corporations to perform full-time security or investigative service, while actually engaged in the duties of their employment; or
(5) The state fire marshal, the state fire marshal's deputies or member of a fire department authorized to carry a firearm pursuant to K.S.A. Supp. 31-157 and amendments thereto, while engaged in an investigation in which such fire marshal, deputy or member is authorized to carry a firearm pursuant to K.S.A. 31-157 and amendments thereto.
(6) Special deputy sheriffs in counties over 100,000 population who have satisfactorily completed the basic course of instruction required for permanent appointment as a part-time law enforcement officer.

(d) Subsections (a) (1) and (6) shall not apply to any person who sells, purchases, possesses or carries a firearm, device or attachment which has been rendered unserviceable by steel weld in the chamber and marriage weld of the barrel to the receiver and which has been registered in the national firearms registration and transfer record in compliance with 26 U.S.C. 5841 et seq. in the name of such person and, if such person transfers such firearm, device or attachment to another person, has been so registered in the transferee's name by the transferor.

(e) It shall be a defense that the defendant is within an exemption. (K.S.A. 21-4201)

Violation of this section is a Class A violation.

11-105. SAME. Section 10.5 of the Uniform Code incorporated in Section 11-101 above shall be amended to read as follows:

10.5. UNLAWFUL DISCHARGE OF FIREARMS. Unlawful discharge of firearms is the discharging or firing of any gun, rifle, pistol, revolver or other firearm within the city. This section shall not be construed to apply:

(a) To the discharge of firearms by any duly authorized law enforcement officer when necessary in the discharge of his or her official duties;
(b) To the discharge of firearms in any licensed shooting gallery;
(c) To firing squads for ceremonials; nor
(d) To a legitimate gunsmith in pursuit of his or her trade; nor
(e) To an established trap or skeet range upon the premises of any private club, which club was in existence upon the same property prior to the date of the incorporation of the City, from 10:00 a.m. to 5:00 p.m., solely for recreational purposes, provided that the club rules and changes therein related to the types of weapons and loads will be first submitted to the Chief of Police for approval; provided further that the distance from the muzzle direction of the appropriate firearm so used shall not be less than 1,000 feet from the boundary line of any adjacent property owned by another.

Unlawful discharge of firearms is a Class B violation.

11-106. SAME. Section 10.6 of the Uniform Code incorporated in Section 11-101 above shall be amended to read as follows:

10.6. AIR GUN, AIR RIFLE, BOW AND ARROW, SLINGSHOT OR BB GUN.
(a) The unlawful operation of an air gun, air rifle, bow and arrow, slingshot or BB gun is the shooting, discharging or operating of any air gun, air rifle, bow and arrow, slingshot or BB gun, within the city, except within the confines of a building or other structure from which the projectiles cannot escape.
Unlawful operation of an air gun, air rifle, bow and arrow, slingshot or BB gun is a Class C violation.

(b) The unlawful possession of an air gun, air rifle, bow and arrow, slingshot or BB gun is the possession of an air gun, air rifle, bow and arrow, slingshot or BB gun with the intent to shoot, discharge, or operate the air gun, air rifle, bow and arrow, slingshot or BB gun within the city, except within the confines of a building or other structure from which the projectiles cannot escape.

Unlawful possession of an air gun, air rifle, bow and arrow, slingshot or BB gun is a Class C violation.

11-107. SAME. Section 10.13 of the Uniform Code incorporated in Section 11-101 above shall be amended to read as follows:

10.13 BARBED WIRE. It shall be unlawful for any person to construct, set up or maintain any barbed wire or barbed wire fence or enclosure with the city, except on property zoned for agricultural purposes.

Violation of this section is a Class C violation.

11-108. SAME. Section 11.11 of the Uniform Code, relating to Cruelty to Animals, incorporated in Section 11-101 above is hereby omitted and deleted.

Section 2. Repeal of Existing Article. That existing Article 1 of Chapter 11 (Sections 11-101:105) of the Code of the City of Leawood is hereby repealed. (Prior law: Ord. No. 1519 C)

Section 3. Validity of Ordinance. That should any section, paragraph, sentence, clause or phrase of this ordinance be declared unconstitutional or invalid for any reason, the remainder of this ordinance shall not be thereby affected.

Section 4. Take Effect. That this ordinance shall take effect and be in force from and after its publication in the official City newspaper.

Passed by the Council the 7th day of October, 1996.

Approved by the Mayor the 7th day of October, 1996.

(SEAL)

Marcia Rinehart
Marcia Rinehart Mayor

Attest:

Martha Heizer
Martha Heizer City Clerk

APPROVED AS TO FORM:

R.S. Wetzler
R.S. Wetzler City Attorney

ORD1614C

Publication Fees: $71.63

The Legal Record
600 E. Santa Fe, Suite 4
Olathe, KS 66061-3700

CITY OF LEAWOOD
ATTN: MARTHA HEIZER
4800 TOWN CENTER DR
LEAWOOD, KS 66211

Proof of Publication

STATE OF KANSAS, JOHNSON COUNTY, SS;
Tammy Schwien, of lawful age, being first duly sworn, deposes and says that she is Legal Notices Administrator of The Legal Record which is a newspaper printed in the State of Kansas, published in and of general paid circulation on a weekly, monthly or yearly basis in Johnson County, Kansas, is not a trade, religious or fraternal publication, is published at least weekly fifty (50) times a year, has been so published continuously and uninterrupted in said County and State for a period of more than five (5) years prior to the first publication of the notice attached, and has been admitted at the post office as second class matter (now called periodicals class).
That a notice was published in all editions of the regular and entire issue for the following subject matter (also identified by the following case number, if any) for 1 consecutive week(s), as follows:

ORDINANCE NO. 1614C--10/8/96

Tammy Schwien
Legal Notices Administrator

Subscribed and sworn to before me on this date:
October 9, 1996

Debra Dziadura
Notary Public

DEBRA DZIADURA
Notary Public - State of Kansas

My appointment expires: August 21, 1999.

$71.63

ORDINANCE NO. 1614 C

First published in The Legal Record, Tuesday, October 8, 1996.

ORDINANCE NO. 1614 C

AN ORDINANCE ADOPTING THE 1996 EDITION OF THE "UNIFORM PUBLIC OFFENSE CODE FOR KANSAS CITIES".

Be it ordained by the Governing Body of the City of Leawood:

Section 1. Code Amended. That Article 1 of Chapter 11 ("Public Offenses") of the Code of the City of Leawood is hereby amended to read as follows:

ARTICLE 1. UNIFORM OFFENSE CODE

11-101. UNIFORM CODE INCORPORATED. There is hereby incorporated by reference the "Uniform Public Offense Code for Kansas Cities", 1996 Edition, prepared and published by the League of Kansas Municipalities, save and except such articles, sections, parts or portions as are hereafter omitted, deleted, modified or changed, such incorporation being authorized by K.S.A. 12-3009 through 12-3012, inclusive, as amended. No fewer than three copies of said uniform ordinance shall be marked or stamped "Official Copy", with all sections or portions thereof intended to be omitted or changed clearly marked to show any such omission or change and to which shall be attached a copy of this ordinance, and filed with the City Clerk to be open to inspection and available to the public at all reasonable hours.

11-102. SAME; AMENDMENT. Section 3.1 of the Uniform Code incorporated in Section 11-101 above is hereby amended to read as follows:

3.1 BATTERY.

(a) Battery is:

(1) Intentionally or recklessly causing bodily harm to another person; or

(2) Intentionally causing physical contact with another person when done in a rude, insulting or angry manner.

Battery is a Class B violation.

11-103. SAME. Section 6.16 of the Uniform Code incorporated in Section 11-101 above is hereby amended to read as follows:

6.16. GIVING A WORTHLESS CHECK

(a) Giving a worthless check is the making, drawing, issuing or delivering or causing or directing the making, drawing, issuing or delivering of any check, order or draft on any bank, credit union, savings and loan association or depository for the payment of money or its equivalent with intent to defraud and knowing, at the time of the making, drawing, issuing or delivering of such check, order or draft, that the maker or drawer has no deposit in or credits with the drawee or has not sufficient funds in, or credits with, the drawee for the payment of such check, order or draft in full upon its presentation.

(b) In any prosecution against the maker or drawer of a check, order or draft payment, of which has been refused by the drawee on account of insufficient funds, the making, drawing, issuing or delivering of such check shall be prima facie evidence of intent to defraud and of knowledge of insufficient funds in, or on deposit with, the drawee:

(1) unless the maker or drawer pays the holder thereof the amount due thereon and a service charge as established and in effect by adoption of the annual City fee resolution, within seven days after notice has been given to the maker or drawer that such check, draft or order has not been paid by the drawee. As used in this section, notice includes oral or written notice to the person entitled thereto. Written notice shall be presumed to have been given when deposited as restricted matter in the United States mail, addressed to the person to be given notice at such person's address as it appears on such check, draft or order; or

(2) if a postdated date is placed on the check, order or draft without the knowledge or consent of the payee.

(c) It shall not be a defense to a prosecution under this section that the check, draft or order upon which such prosecution is based:

(1) Was postdated, unless such check, draft or order was presented for payment prior to the postdated date; or

(2) Was given to a payee who had knowledge or had been informed, when the payee accepted the check, draft or order, that the maker did not have sufficient funds in the hands of the drawee to pay such check, draft or order upon presentation, unless such check, draft or order was presented for payment prior to the date the maker informed the payee there would be sufficient funds. (K.S.A. Supp. 21-3707, as amended)

Giving a worthless check is a Class A violation if the check, draft or order is drawn for less than $500 except when the person has, within five years immediately preceding commission of the offense, been convicted of giving a worthless check two or more times, in which case it is a felony under state statute.

11-104. SAME. Section 10.1 of the Uniform Code incorporated in Section 11-101 above is hereby amended to read as follows:

10.1. CRIMINAL USE OF WEAPONS

(a) Criminal use of weapons is knowingly:

(1) Selling, manufacturing, purchasing, possessing or carrying any bludgeon, sand-club, metal knuckles, throwing star, or any knife, commonly referred to as a switch-blade, which has a blade that opens automatically by hand pressure applied to a button, spring or other device in the handle of the knife, or any knife having a blade that opens or falls or is ejected into position by the force of gravity or by an outward, downward, or centrifugal thrust or movement;

(2) Carrying concealed on one's person, or possessing with the intent to use the same unlawfully against another, a dagger, dirk, billy, blackjack, slingshot, dangerous knife, straight-edged razor, stiletto or any other dangerous or deadly weapon or instrument of like character, except that an ordinary pocket knife with no blade more than four inches in length shall not be construed to be dangerous knife, or a dangerous or deadly weapon or instrument;

(3) Carrying on one's person or in any land, water or air vehicle, with intent to use the same unlawfully, a tear gas or smoke bomb or projector or any object containing a noxious liquid, gas or substance;

(4) Carrying any pistol, revolver or other firearm:

(i) concealed on one's person except when on the person's land or in the person's abode or fixed place of business;

(ii) openly or visibly on the person at any place open to public view;

(iii) within the passenger compartment of any vehicle in transport unless the weapon is unloaded and in a case;

(5) Setting a spring gun;

(6) Possessing or transporting any incendiary or explosive material, liquid, solid or mixture, equipped with a fuse, wick or any other detonating device, commonly known as a molotov cocktail or a pipe bomb.

(b) Subsections (a) (a), (2), (3) and (4) shall not apply to or affect any of the following:

(1) Law enforcement officers, or any person summoned by any such officers to assist in making arrests or preserving the peace while actually engaged in assisting such officer;

(2) Wardens, superintendents, directors, security personnel and keepers of prisons, penitentiaries, jails and other institutions for the detention of persons accused or convicted of crime, while acting within the scope of their authority;

(3) Members of the armed services or reserve forces of the United States or the Kansas National Guard while in the performance of their official duty; or

(4) Manufacture of, transportation to, or sale of weapons to a person authorized under (b) (1) through (b) (3) of this section to possess such weapons.

(c) Subsection (a) (4) does not apply to or affect the following:

(1) Watchmen, while actually engaged in the performance of the duties of their employment;

(2) Licensed hunters while engaged in hunting;

(3) Private detectives licensed by the state to carry the firearm involved, while actually engaged in the duties of their employment;

(4) Detectives or special agents regularly employed by railroad companies or other corporations to perform full-time security or investigative service, while actually engaged in the duties of their employment; or

(5) The state fire marshal, the state fire marshal's deputies or member of a fire department authorized to carry a firearm pursuant to K.S.A. Supp. 31-157 and amendments thereto, while engaged in an investigation in which such fire marshal, deputy or member is authorized to carry a firearm pursuant to K.S.A. 31-157 and amendments thereto.

(6) Special deputy sheriffs in counties over 100,000 population who have satisfactorily completed the basic course of instruction required for permanent appointment as a part-time law enforcement officer.

(d) Subsections (a) (1) and (6) shall not apply to any person who sells, purchases, possesses or carries a firearm, device or attachment which has been rendered unserviceable by steel weld in the chamber and marriage weld of the barrel to the receiver and which has been registered in the national firearms registration and transfer record in compliance with 26 U.S.C. 5841 et seq. in the name of such person and, if such person transfers such firearm, device or attachment to another person, has been so registered in the transferee's name by the transferor.

(e) It shall be a defense that the defendant is within an exemption. (K.S.A. 21-4201)

Violation of this section is a Class A violation.

11-105. SAME. Section 10.5 of the Uniform Code incorporated in Section 11-101 above shall be amended to read as follows:

10.5. UNLAWFUL DISCHARGE OF FIREARMS. Unlawful discharge of firearms is the discharging or firing of any gun, rifle, pistol, revolver or other firearm within the city. This section shall not be construed to apply:

(a) To the discharge of firearms by any duly authorized law enforcement officer when necessary in the discharge of his or her official duties;

(b) To the discharge of firearms in any licensed shooting gallery;

(c) To firing squads for ceremonials; nor

(d) To a legitimate gunsmith in pursuit of his or her trade; nor

(e) To an established trap or skeet range upon the premises of any private club, which club was in existence upon the same property prior to the date of the incorporation of the City, from 10:00 a.m. to 5:00 p.m., solely for recreational purposes, provided that the club rules and changes therein related to the types of weapons and loads will be first submitted to the Chief of Police for approval; provided further that the distance from the muzzle direction of the appropriate firearm so used shall not be less than 1,000 feet from the boundary line of any adjacent property owned by another.

Unlawful discharge of firearms is a Class B violation.

11-106. SAME. Section 10.6 of the Uniform Code incorporated in Section 11-101 above shall be amended to read as follows:

10.6. AIR GUN, AIR RIFLE, BOW AND ARROW, SLINGSHOT OR BB GUN.

(a) The unlawful operation of an air gun, air rifle, bow and arrow, slingshot or BB gun is the shooting, discharging or operating of any air gun, air rifle, bow and arrow, slingshot or BB gun, within the city, except within the confines of a building or other structure from which the projectiles cannot escape.

Unlawful operation of an air gun, air rifle, bow and arrow, slingshot or BB gun is a Class C violation.

(b) The unlawful possession of an air gun, air rifle, bow and arrow, slingshot or BB gun is the possession of an air gun, air rifle, bow and arrow, slingshot or BB gun with the intent to shoot, discharge, or operate the air gun, air rifle, bow and arrow, slingshot or BB gun within the city, except within the confines of a building or other structure from which the projectiles cannot escape.

Unlawful possession of an air gun, air rifle, bow and arrow, slingshot or BB gun is a Class C violation.

11-107. SAME. Section 10.13 of the Uniform Code incorporated in Section 11-101 above shall be amended to read as follows:

10.13 BARBED WIRE. It shall be unlawful for any person to construct, set up or maintain any barbed wire or barbed wire fence or enclosure with the city, except on property zoned for agricultural purposes.

Violation of this section is a Class C violation.

11-108. SAME. Section 11.11 of the Uniform Code, relating to Cruelty to Animals, incorporated in Section 11-101 above is hereby omitted and deleted.

Section 2. Repeal of Existing Article. That existing Article 1 of Chapter 11 (Sections 11-101:105) of the Code of the City of Leawood is hereby repealed. (Prior law: Ord. No. 1519 C)

Section 3. Validity of Ordinance. That should any section, paragraph, sentence, clause or phrase of this ordinance be declared unconstitutional or invalid for any reason, the remainder of this ordinance shall not be thereby affected.

Section 4. Take Effect. That this ordinance shall take effect and be in force from and after its publication in the official City newspaper

Passed by the Council the 7th day of October, 1996.

Approved by the Mayor the 7th day of October, 1996.

(SEAL)

Marcia Rinehart
Mayor

Attest:

Martha Helzer
City Clerk

APPROVED AS TO FORM:

R.S. Wetzler
City Attorney

ORDINANCE NO. 1613 C

AN ORDINANCE AMENDING SECTION 14-201 OF THE CODE OF THE CITY OF LEAWOOD RELATING TO PENALTIES FOR VIOLATIONS OF LOCAL TRAFFIC REGULATIONS.

Be it ordained by the Governing Body of the City of Leawood:

Section 1. Code Amended. That Section 14-201 of the Code of the City of Leawood is hereby amended to read as follows:

14-201. PENALTIES. Unless otherwise specified, the penalties for violation of any provision of this article will be the same as set out in Section 201(d) of the "Standard Traffic Ordinance for Kansas Cities", 1996 Edition, as incorporated by reference by Section 14-101 of this Chapter.

Section 2. Repeal of Existing Section. That existing Section 14-201 of the Code of the City of Leawood is hereby repealed. (Prior law: Ord. No. 1518C)

Section 3. Take Effect. That this ordinance shall take effect and be in force from and after its publication in the official City newspaper.

Passed by the Council the 7th day of October, 1996.

Approved by the Mayor the 7th day of October, 1996.

(SEAL)

Marcia Rinehart Mayor

Attest:

Martha Heizer City Clerk

APPROVED AS TO FORM:

R.S. Wetzler City Attorney

ORD1613C

Publication Fees: $14.91

The Legal Record
600 E. Santa Fe, Suite 4
Olathe, KS 66061-3700

CITY OF LEAWOOD
ATTN: MARTHA HEIZER
4800 TOWN CENTER DR
LEAWOOD, KS 66211

Proof of Publication

STATE OF KANSAS, JOHNSON COUNTY, SS;
Tammy Schwien, of lawful age, being first duly sworn, deposes and says that she is Legal Notices Administrator of The Legal Record which is a newspaper printed in the State of Kansas, published in and of general paid circulation on a weekly, monthly or yearly basis in Johnson County, Kansas, is not a trade, religious or fraternal publication, is published at least weekly fifty (50) times a year, has been so published continuously and uninterrupted in said County and State for a period of more than five (5) years prior to the first publication of the notice attached, and has been admitted at the post office as second class matter (now called periodicals class).
That a notice was published in all editions of the regular and *entire issue for the following subject matter (also identified by*

the following case number, if any) for 1 consecutive week(s), as follows:

ORDINANCE NO. 1613C--10/8/96

Tammy Schwien
Legal Notices Administrator

Subscribed and sworn to before me on this date:
October 9, 1996

Debra Dziadura
Notary Public

DEBRA DZIADURA
Notary Public - State of Kansas

My appointment expires: August 21, 1999.

ORDINANCE NO. 1613 C

First published in The Legal Record, Tuesday, October 8, 1996.

ORDINANCE NO. 1613 C

AN ORDINANCE AMENDING SECTION 14-201 OF THE CODE OF THE CITY OF LEAWOOD RELATING TO PENALTIES FOR VIOLATIONS OF LOCAL TRAFFIC REGULATIONS.

Be it ordained by the Governing Body of the City of Leawood:

Section 1. Code Amended. That Section 14-201 of the Code of the City of Leawood is hereby amended to read as follows:

14-201. PENALTIES. Unless otherwise specified, the penalties for violation of any provision of this article will be the same as set out in Section 201(d) of the "Standard Traffic Ordinance for Kansas Cities, 1996 Edition, as incorporated by reference by Section 14-101 of this Chapter.

Section 2. Repeal of Existing Section. That existing Section 14-201 of the Code of the City of Leawood is hereby repealed. (Prior law: Ord. No. 1518C)

Section 3. Take Effect. That this ordinance shall take effect and be in force from and after its publication in the official City newspaper.

Passed by the Council the 7th day of October, 1996.

Approved by the Mayor the 7th day of October, 1996.

(SEAL)

Attest:

Marcia Rinehart
Mayor

Martha Heizer
City Clerk

APPROVED AS TO FORM:

R.S. Wetzler
City Attorney

$14.91

ORDINANCE NO. 1612 C

AN ORDINANCE ADOPTING THE 1996 EDITION OF THE "STANDARD TRAFFIC ORDINANCE".

Be it ordained by the Governing Body of the City of Leawood:

Section 1. Code Amended. That Article 1 of Chapter 14 ("Traffic") of the Code of the City of Leawood is hereby amended to read as follows:

ARTICLE 1. STANDARD TRAFFIC ORDINANCE

14-101. INCORPORATING "STANDARD TRAFFIC ORDINANCE". There is hereby incorporated by reference for the purpose of regulating traffic within the corporate limits of the City of Leawood, Kansas, that certain standard traffic ordinance known as the "Standard Traffic Ordinance for Kansas Cities", Edition of 1996, prepared and published in book form by the League of Kansas Municipalities, save and except such articles, sections, parts or portions as are hereafter omitted, deleted, modified or changed, such incorporation being authorized by K.S.A. 12-3009 through 12-3012, inclusive, as amended. No fewer than three copies of said standard ordinance shall be marked or stamped "Official Copy", with all sections or portions thereof intended to be omitted or changed clearly marked to show any such omission or change and to which shall be attached a copy of this ordinance, and filed with the City Clerk to be open to inspection and available to the public at all reasonable hours.

14-102. SAME; AMENDMENT. Section 33 (Article 7) of the standard traffic ordinance incorporated in Section 14-101 of this article shall be amended to read as follows:

Sec. 33. Maximum Speed Limits.

(a) Except when a special hazard exists that requires a lower speed for compliance with Section 32, the limits specified in this Section or established as hereinafter authorized shall be maximum lawful speeds, and no person shall drive a vehicle at a speed in excess of such maximum limits:

(1) All vehicles 20 miles per hour in any park under the jurisdiction of this city.

(2) All vehicles 20 miles per hour during those hours when students are going to and from school of any day school is in session, upon streets and/or parts of streets abutting school property and adjacent to school crosswalks designated as school zones; provided that appropriate signs are erected giving notice of such speed limits and the times said limits are in force, said times to be determined by the Chief of Police with the consent of the City Council.

(3) All vehicles 25 miles per hour in any residential district and on other streets within the City except where modified by engineering and traffic investigation as provided hereafter in subsection (b) of this Section. The maximum speed limit established by or pursuant to this paragraph shall be of force and effect regardless of whether signs are posted giving notice thereof and notwithstanding any signs giving notice of maximum speed limits in excess thereof, and any sign giving notice of a maximum speed limit in excess of the limits established by or pursuant to this paragraph shall not be of any force or effect, subject to the following exception.

(b) The Chief of Police is hereby authorized and empowered to designate maximum speed zones when he or she shall find and determine that such regulation is necessary for safety purposes or to expedite traffic, to the extent any such regulation is not in conflict with any law of the City. The Chief of Police shall, following ratification of his or her designations under this subsection by the Governing Body, place and maintain the necessary traffic control signs and devices.

(c) Whenever the Chief of Police shall determine upon the basis of an engineering and traffic investigation that any speed limit herein set forth is greater or less than is reasonable or safe under the conditions found to exist, the Governing Body shall declare by resolution a reasonable and safe speed limit consistent with applicable state and local statutes which shall be effective at all times or during daytime or nighttime or at such other times as may be determined when appropriate signs giving notice thereof are erected pursuant to Council action and K.S.A. 8-1560 and 8-2002. It shall be unlawful for any person to drive a vehicle at a speed in excess of such declared maximum limits.

14-103. SAME. Section 68 (Article 11) of the standard traffic ordinance incorporated in Section 14-*101 of this article shall be amended to read as follows:*

Sec. 68. Pedestrians on Highways.

(a) Where a sidewalk is provided and its use is practicable, it shall be unlawful for any pedestrian to walk, jog or run along and upon an adjacent roadway.

(b) Where a sidewalk is not available, any pedestrian walking, jogging or running along and upon a highway shall walk, jog or run only on a shoulder, as far as practicable from the edge of the roadway.

(c) Where neither a sidewalk nor a shoulder is available, any pedestrian walking, jogging or running along and upon a highway shall walk, jog or run as near as practicable to an outside edge of the roadway, and, if on a two-way roadway, shall walk, jog or run only on the left side of the roadway.

(d) Except as otherwise provided in this ordinance, any pedestrian upon a roadway shall yield the right-of-way to all vehicles upon the roadway.

14-104. SAME. Section 136 (Article 15) of the standard traffic ordinance incorporated in Section 14-101 of this article shall be amended to read as follows:

Sec. 136. Use of Coasters, Roller Skates and Similar Devices Restricted.

(a) No person upon roller skates, or riding in or by means of any coaster, toy vehicle, or similar device, shall:

(1) go upon any roadway except while crossing a street at a crosswalk and except upon streets set aside as play streets.

(2) operate such a device on any public tennis court.

(3) operate such a device on any private parking area or lot where signs are posted giving notice of such prohibition. This prohibition shall not be applicable unless the following signage is clearly and properly posted at all entrances to said private parking lot or area, to wit:

NOTICE

Pursuant to Section 14-104 of the Code of the City of Leawood, Kansas, no roller skates, coaster, rollerblades, skateboard, toy vehicle or similar device may be operated in this parking lot or area. Conviction will result in a $25.00 fine.

(b) Whenever any person is operating such a device upon a useable path or sidewalk, such person shall yield the right-of-way to any pedestrian and shall give an audible signal before overtaking and passing such pedestrian.

(c) *Any person found guilty of a violation of this section shall be fined $25.00.*

14-105. TRAFFIC REGULATIONS ON PRIVATE PROPERTY. Whenever the person in possession or control of any private property used by the public for purposes of vehicular traffic by permission of the owner, shall cause to be posted at each entrance thereto a permanently lettered clearly legible sign with the following legend:

"TRAFFIC REGULATIONS OF THE CITY OF LEAWOOD
ENFORCED ON THIS PROPERTY. SPEED LIMIT 15 M.P.H." (or as posted.)

Then such private property shall thereafter be deemed to be under the traffic regulations of the city as provided by law.

Section 2. Repeal of Existing Article. That existing Article 1 of Chapter 14 (Sections 14-101:105) of the Code of the City of Leawood is hereby repealed. (Prior law: Sections 14-101:103, Ord. No. 1517C; Section 14-104, Ord. Nos. 1517C & 1583C; and Section 14-105, Ord. No. 1526C)

Section 3. Validity of Ordinance. That should any section, paragraph, sentence, clause or phrase of this ordinance be declared unconstitutional or invalid for any reason, the remainder of this ordinance shall not be thereby affected.

Section 4. Take Effect. That this ordinance shall take effect and be in force from and after its publication in the official City newspaper.

Passed by the Council the 7th day of October, 1996.

Approved by the Mayor the 7th day of October, 1996.

(S E A L)

Marcia Rinehart
Marcia Rinehart Mayor

Attest:

Martha Heizer
Martha Heizer City Clerk

APPROVED AS TO FORM:
R.S. Wetzler City Attorney

ORD1612C

Publication Fees: $42.90

The Legal Record
600 E. Santa Fe, Suite 4
Olathe, KS 66061-3700

CITY OF LEAWOOD
ATTN: MARTHA HEIZER
4800 TOWN CENTER DR
LEAWOOD, KS 66211

Proof of Publication

STATE OF KANSAS, JOHNSON COUNTY, SS;
Tammy Schwien, of lawful age, being first duly sworn, deposes and says that she is Legal Notices Administrator of The Legal Record which is a newspaper printed in the State of Kansas, published in and of general paid circulation on a weekly, *monthly or yearly basis in Johnson County, Kansas, is not a* trade, religious or fraternal publication, is published at least weekly fifty (50) times a year, has been so published continuously and uninterrupted in said County and State for a period of more than five (5) years prior to the first publication of the notice attached, and has been admitted at the post office as second class matter (now called periodicals class).
That a notice was published in all editions of the regular and entire issue for the following subject matter (also identified by the following case number, if any) for 1 consecutive week(s), as follows:

ORDINANCE NO. 1612C--10/8/96

Tammy Schwien
Legal Notices Administrator

Subscribed and sworn to before me on this date:
October 9, 1996

Debra Dziadura
Notary Public

DEBRA DZIADURA
Notary Public - State of Kansas

My appointment expires: August 21, 1999.

$42.90

ORDINANCE NO. 1612 C

First published in The Legal Record, Tuesday, October 8, 1996.

ORDINANCE NO. 1612 C

AN ORDINANCE ADOPTING THE 1996 EDITION OF THE "STANDARD TRAFFIC ORDINANCE".

Be it ordained by the Governing Body of the City of Leawood:

Section 1. Code Amended. That Article 1 of Chapter 14 ("Traffic") of the Code of the City of Leawood is hereby amended to read as follows:

ARTICLE 1. STANDARD TRAFFIC ORDINANCE

14-101. INCORPORATING "STANDARD TRAFFIC ORDINANCE". There is hereby incorporated by reference for the purpose of regulating traffic within the corporate limits of the City of Leawood, Kansas, that certain standard traffic ordinance known as the "Standard Traffic Ordinance for Kansas Cities", Edition of 1996, prepared and published in book form by the League of Kansas Municipalities, save and except such articles, sections, parts or portions as are hereafter omitted, deleted, modified or changed, such incorporation being authorized by K.S.A. 12-3009 through 12-3012, inclusive, as amended. No fewer than three copies of said standard ordinance shall be marked or stamped "Official Copy", with all sections or portions thereof intended to be omitted or changed clearly marked to show any such omission or change and to which shall be attached a copy of this ordinance, and filed with the City Clerk to be open to inspection and available to the public at all reasonable hours.

14-102. SAME; AMENDMENT. Section 33 (Article 7) of the standard traffic ordinance incorporated in Section 14-101 of this article shall be amended to read as follows:

Sec. 33. Maximum Speed Limits.

(a) Except when a special hazard exists that requires a lower speed for compliance with Section 32, the limits specified in this Section or established as hereinafter authorized shall be maximum lawful speeds, and no person shall drive a vehicle at a speed in excess of such maximum limits:

(1) All vehicles 20 miles per hour in any park under the jurisdiction of this city.

(2) All vehicles 20 miles per hour during those hours when students are going to and from school of any day school is in session, upon streets and/or parts of streets abutting school property and adjacent to school crosswalks designated as school zones; provided that appropriate signs are erected giving notice of such speed limits and the times said limits are in force, said times to be determined by the Chief of Police with the consent of the City Council.

(3) All vehicles 25 miles per hour in any residential district and on other streets within the City except where modified by engineering and traffic investigation as provided hereafter in subsection (b) of this Section. The maximum speed limit established by or pursuant to this paragraph shall be of force and effect regardless of whether signs are posted giving notice thereof and notwithstanding any signs giving notice of maximum speed limits in excess thereof, and any sign giving notice of a maximum speed limit in excess of the limits established by or pursuant to this paragraph shall not be of any force or effect, subject to the following exception.

(b) The Chief of Police is hereby authorized and empowered to designate maximum speed zones when he or she shall find and determine that such regulation is necessary for safety purposes or to expedite traffic, to the extent any such regulation is not in conflict with any law of the City. The Chief of Police shall, following ratification of his or her designations under this subsection by the Governing Body, place and maintain the necessary traffic control signs and devices.

(c) Whenever the Chief of Police shall determine upon the basis of an engineering and traffic investigation that any speed limit herein set forth is greater or less than is reasonable or safe under the conditions found to exist, the Governing Body shall declare by resolution a reasonable and safe speed limit consistent with applicable state and local statutes which shall be effective at all times or during daytime or nighttime or at such other times as may be determined when appropriate signs giving notice thereof are erected pursuant to Council action and K.S.A. 8-1560 and 8-2002. It shall be unlawful for any person to drive a vehicle at a speed in excess of such declared maximum limits.

14-103. SAME. Section 68 (Article 11) of the standard traffic ordinance incorporated in Section 14-101 of this article shall be amended to read as follows:

Sec. 68. Pedestrians on Highways.

(a) Where a sidewalk is provided and its use is practicable, it shall be unlawful for any pedestrian to walk, jog or run along and upon an adjacent roadway.

(b) Where a sidewalk is not available, any pedestrian walking, jogging or running along and upon a highway shall walk, jog or run only on a shoulder, as far as practicable from the edge of the roadway.

(c) Where neither a sidewalk nor a shoulder is available, any pedestrian walking, jogging or running along and upon a highway shall walk, jog or run as near as practicable to an outside edge of the roadway, and, if on a two-way roadway, shall walk, jog or run only on the left side of the roadway.

(d) Except as otherwise provided in this ordinance, any pedestrian upon a roadway shall yield the right-of-way to all vehicles upon the roadway.

14-104. SAME. Section 136 (Article 15) of the standard traffic ordinance incorporated in Section 14-101 of this article shall be amended to read as follows:

Sec. 136. Use of Coasters, Roller Skates and Similar Devices Restricted.

(a) No person upon roller skates, or riding in or by means of any coaster, toy vehicle, or similar device, shall:

(1) go upon any roadway except while crossing a street at a crosswalk and except upon streets set aside as play streets.

(2) operate such a device on any public tennis court.

(3) operate such a device on any private parking area or lot where signs are posted giving notice of such prohibition. This prohibition shall not be applicable unless the following signage is clearly and properly posted at all entrances to said private parking lot or area, to wit:

NOTICE

Pursuant to Section 14-104 of the Code of the City of Leawood, Kansas, no roller skates, coaster, rollerblades, skateboard, toy vehicle or similar device may be operated in this parking lot or area. Conviction will result in a $25.00 fine.

(b) Whenever any person is operating such a device upon a useable path or sidewalk, such person shall yield the right-of-way to any pedestrian and shall give an audible signal before overtaking and passing such pedestrian.

(c) Any person found guilty of a violation of this section shall be fined $25.00.

14-105. TRAFFIC REGULATIONS ON PRIVATE PROPERTY. Whenever the person in possession or control of any private property used by the public for purposes of vehicular traffic by permission of the owner, shall cause to be posted at each entrance thereto a permanently lettered clearly legible sign with the following legend:

"TRAFFIC REGULATIONS OF THE CITY OF LEAWOOD
ENFORCED ON THIS PROPERTY. SPEED LIMIT 15 M.P.H." (or as posted.)

Then such private property shall thereafter be deemed to be under the traffic regulations of the city as provided by law.

Section 2. Repeal of Existing Article. That existing Article 1 of Chapter 14 (Sections 14-101:105) of the Code of the City of Leawood is hereby repealed. (Prior law: Sections 14-101:103, Ord. No. 1517C; Section 14-104, Ord. Nos. 1517C & 1583C; and Section 14-105, Ord. No. 1526C)

Section 3. Validity of Ordinance. That should any section, paragraph, sentence, clause or phrase of this ordinance be declared unconstitutional or invalid for any reason, the remainder of this ordinance shall not be thereby affected.

Section 4. Take Effect. That this ordinance shall take effect and be in force from and after its publication in the official City newspaper.

Passed by the Council the 7th day of October, 1996.

Approved by the Mayor the 7th day of October, 1996.

(S E A L)

Marcia Rinehart
Marcia Rinehart Mayor

Attest:

Martha Heizer
Martha Heizer City Clerk

APPROVED AS TO FORM:
R.S. Wetzler City Attorney

ORDINANCE NO. 1611

AN ORDINANCE GRANTING A WEATHER STATION EASEMENT TO THE CITY OF OVERLAND PARK, KANSAS, FOR THE PURPOSES OF CONSTRUCTING, USING, REPLACING AND MAINTAINING A WEATHER INSTRUMENT ON MISSION ROAD OVER NEGRO CREEK.

Be it ordained by the Governing Body of the City of Leawood:

Section 1. That the City of Leawood, Kansas, does hereby grant a weather station easement to the City of Overland Park, Kansas, more particularly described as follows, to wit:

A tract of land in the Northwest 1/4 of Section 10, Township 14S, Range 25E, in the City of Leawood, Johnson County, Kansas, more particularly described as follows: Beginning at the Northwest corner of said Northwest 1/4 of Section 10; thence South 00 degrees 09'53" West, along the West line of said Northwest 1/4 a distance of 980.00 feet; thence South 89 degrees 51'07" East, a distance of 15.00 feet, to the True Point of Beginning of said tract; thence continuing South 89 degrees 51'07" East, a distance of 25.00 feet, to a point on the east right-of-way line of Mission Road; thence South 00 degrees 09'53" West, along said east right-of-way line a distance of 70.00 feet; thence North 89 degrees 51'07" West, a distance of 25 feet; thence North 00 degrees 09'53" East, a distance of 70.00 feet, to the Point of Beginning.

Section 2. That a copy of said weather station easement is attached hereto and thereby incorporated by reference.

Section 3. That this ordinance shall take effect and be in force from and after its publication in the official City newspaper.

Passed by the Council the 16th day of September, 1996.

Approved by the Mayor the 16th day of September, 1996.

(SEAL)

Marcia Rinehart
Mayor

Attest:

Martha Heizer City Clerk

APPROVED FOR FORM:

R.S. Wetzler City Attorney

ORD1611

Publication Fees: $19.63

The Legal Record
600 E. Santa Fe, Suite 4
Olathe, KS 66061-3700

CITY OF LEAWOOD
ATTN: MARTHA HEIZER
4800 TOWN CENTER DR
LEAWOOD, KS 66211

Proof of Publication

STATE OF KANSAS, JOHNSON COUNTY, SS;
Tammy Schwien, of lawful age, being first duly sworn, deposes and says that she is Legal Notices Administrator of The Legal Record which is a newspaper printed in the State of Kansas, published in and of general paid circulation on a weekly, monthly or yearly basis in Johnson County, Kansas, is not a trade, religious or fraternal publication, is published at least weekly fifty (50) times a year, has been so published continuously and uninterrupted in said County and State for a period of more than five (5) years prior to the first publication of the notice attached, and has been admitted at the post office as second class matter (now called periodicals class). That a notice was published in all editions of the regular and entire issue for the following subject matter (also identified by the following case number, if any) for 1 consecutive week(s), as follows:

ORDINANCE NO. 1611--9/17/96

Tammy Schwien
Legal Notices Administrator

Subscribed and sworn to before me on this date:
September 18, 1996

Debra Dziadura
Notary Public

DEBRA DZIADURA
Notary Public - State of Kansas

My appointment expires: August 21, 1999.

ORDINANCE NO. 1611

First published in The Legal Record, Tuesday, September 17, 1996.

ORDINANCE NO. 1611

AN ORDINANCE GRANTING A WEATHER STATION EASEMENT TO THE CITY OF OVERLAND PARK, KANSAS, FOR THE PURPOSES OF CONSTRUCTING, USING, REPLACING AND MAINTAINING A WEATHER INSTRUMENT ON MISSION ROAD OVER NEGRO CREEK.

Be it ordained by the Governing Body of the City of Leawood:

Section 1. That the City of Leawood, Kansas, does hereby grant a weather station easement to the City of Overland Park, Kansas, more particularly described as follows, to wit:

A tract of land in the Northwest 1/4 of Section 10, Township 14S, Range 25E, in the City of Leawood, Johnson County, Kansas, more particularly described as follows: Beginning at the Northwest corner of said Northwest 1/4 of Section 10; thence South 00 degrees 09'53" West, along the West line of said Northwest 1/4 a distance of 980.00 feet; thence South 89 degrees 51'07" East, a distance of 15.00 feet, to the True Point of Beginning of said tract; thence continuing South 89 degrees 51'07" East, a distance of 25.00 feet, to a point on the east right-of-way line of Mission Road; thence South 00 degrees 09'53" West, along said east right-of-way line a distance of 70.00 feet; thence North 89 degrees 51'07" West, a distance of 25 feet; thence North 00 degrees 09'53" East, a distance of 70.00 feet, to the Point of Beginning.

Section 2. That a copy of said weather station easement is attached hereto and thereby incorporated by reference.

Section 3. That this ordinance shall take effect and be in force from and after its publication in the official City newspaper.

Passed by the Council the 16th day of September, 1996.

Approved by the Mayor the 16th day of September, 1996.

(S E A L)

Marcia Rinehart
Marcia Rinehart Mayor

Attest:

Martha Heizer
Martha Heizer City Clerk

APPROVED FOR FORM:
R.S. Wetzler City Attorney

$19.63

ORDINANCE NO. 1610

AN ORDINANCE ACCEPTING TWO TRAFFIC SIGNAL EASEMENTS FROM SAM WILSON'S/KANSAS, INC., FOR TRAFFIC SIGNALS ON 119TH STREET BETWEEN ROE AVENUE AND NALL AVENUE.

Be it ordained by the Governing Body of the City of Leawood:

Section 1. That the City of Leawood hereby accepts two (2) traffic signal easements, along with the restrictions and reservations set forth therein, in the following described property, to wit:

All of the South 10 feet of the East 295.63 feet of Lot 3 and all of the West 20 feet of the East 315.63 feet of the South 25 feet of said Lot 3, all in TOWN CENTER PLAZA, a subdivision of land now in the City of Leawood, Johnson County, Kansas;

AND

All of the South 15 feet of the West 15 feet of Lot 5, TOWN CENTER PLAZA, a subdivision of land now in the City of Leawood, Johnson County, Kansas.

Section 2. That copies of said easements are attached hereto and thereby incorporated by reference.

Section 3. That this ordinance shall take effect and be in force from and after its publication in the official City newspaper.

Passed by the Council the 16th day of September, 1996.

Approved by the Mayor the 16th day of September, 1996.

(SEAL)

Marcia Rinehart Mayor

Attest:

Martha Heizer City Clerk

APPROVED FOR FORM:

R.S. Wetzler City Attorney

ORD1610

Publication Fees: $17.09

The Legal Record
600 E. Santa Fe, Suite 4
Olathe, KS 66061-3700

CITY OF LEAWOOD
ATTN: MARTHA HEIZER
4800 TOWN CENTER DR
LEAWOOD, KS 66211

Proof of Publication

STATE OF KANSAS, JOHNSON COUNTY, SS;
Tammy Schwien, of lawful age, being first duly sworn, deposes and says that she is Legal Notices Administrator of The Legal Record which is a newspaper printed in the State of Kansas, published in and of general paid circulation on a weekly, monthly or yearly basis in Johnson County, Kansas, is not a trade, religious or fraternal publication, is published at least weekly fifty (50) times a year, has been so published continuously and uninterrupted in said County and State for a period of more than five (5) years prior to the first publication of the notice attached, and has been admitted at the post office as second class matter (now called periodicals class).
That a notice was published in all editions of the regular and entire issue for the following subject matter (also identified by the following case number, if any) for 1 consecutive week(s), as follows:

ORDINANCE NO. 1610--9/17/96

Tammy Schwien
Legal Notices Administrator

Subscribed and sworn to before me on this date:
September 18, 1996

Debra Dziadura
Notary Public

DEBRA DZIADURA
Notary Public - State of Kansas

My appointment expires: August 21, 1999.

$17.09

ORDINANCE NO. 1610

First published in The Legal Record, Tuesday, September 17, 1996.

ORDINANCE NO. 1610

AN ORDINANCE ACCEPTING TWO TRAFFIC SIGNAL EASEMENTS FROM SAM-WILSON'S/KANSAS, INC., FOR TRAFFIC SIGNALS ON 119TH STREET BETWEEN ROE AVENUE AND NALL AVENUE.

Be it ordained by the Governing Body of the City of Leawood:

Section 1. That the City of Leawood hereby accepts two (2) traffic signal easements, along with the restrictions and reservations set forth therein, in the following described property, to wit:

All of the South 10 feet of the East 295.63 feet of Lot 3 and all of the West 20 feet of the East 315.63 feet of the South 25 feet of said Lot 3, all in TOWN CENTER PLAZA, a subdivision of land now in the City of Leawood, Johnson County, Kansas;

AND

All of the South 15 feet of the West 15 feet of Lot 5, TOWN CENTER PLAZA, a subdivision of land now in the City of Leawood, Johnson County, Kansas.

Section 2. That copies of said easements are attached hereto and thereby incorporated by reference.

Section 3. That this ordinance shall take effect and be in force from and after its publication in the official City newspaper.

Passed by the Council the 16th day of September, 1996.

Approved by the Mayor the 16th day of September, 1996.

(S E A L)

Marcia Rinehart
Marcia Rinehart Mayor

Attest:

Martha Heizer
Martha Heizer City Clerk

APPROVED FOR FORM:
R. S. Wetzler City Attorney

ORDINANCE NO. 1609

AN ORDINANCE AMENDING AND DEFERRING ASSESSMENTS PREVSIOUSLY IMPOSED BY ORDINANCE 1540 ON CERTAIN LOTS, PIECES AND PARCELS OF GROUND IN THE CITY OF LEAWOOD, KANSAS, FOR THE PURPOSE OF PAYING FOR THE COST OF IMPROVING A SECTION OF STATE LINE ROAD (IMPROVEMENT DISTRICT STATE LINE, PHASE II, PROJECT 134.

WHEREAS, pursuant to proceedings regularly had according to law, contracts have been let for the following improvement in the City of Leawood:

> Improvement of State Line Road from approximately the center line of 119th Street to approximately Five Hundred Thirteen (513) feet south of the center line of 112th Terrace.

and such contracts have been duly performed; and

WHEREAS, the Governing Body has previously determined that the total cost of such improvement is $1,348,366.00; and

WHEREAS, said Governing Body has previously determined that the portion of the cost to be assessed to abutting property owners was $754,950.00; and

WHEREAS, said Governing Body has, after due notice, met and determined the amount of such special assessments; and

WHEREAS, the Governing Body by its ordinance 1540 levied assessments on Property I.D. #HF251314-1007, owned by Fern Stultz and to Property I.D. #HF241314-1009, owned by William R. Davis [hereinafter the "Stultz and Davis Property"]; and

WHEREAS, the owners of said property did appeal the levy of said assessments to the District Court of Johnson County, Kansas in Case No. 93C 8099; and

WHEREAS, the City and the owners of said property, in connection with said litigation and with the approval of the Court, agreed that said properties should be assessed on a deferred basis in the amounts set forth in this ordinance; and

WHEREAS, a copy of the Settlement Agreement in Case No. 93 C 8099, William R. Davis and Fern Stultz, Plaintiffs, v. City of Leawood, Kansas, is on file with the City Clerk of the City of Leawood and with the Clerk of the District Court of Johnson County, Kansas; and

WHEREAS, the Governing Body finds and determines the assessments previously levied by Ordinance 1540 upon the Stultz and Davis Property should be amended and that said properties should be assessed upon the following terms:

1. Special assessments of $14,615 shall be levied against the Davis property and $12,179 shall be levied against the Stultz property.

2. The levy of such assessments shall be deferred interest-free and shall not be effective until the earlier occurrence of the following two events:

(A) the properties are platted and the plat recorded; or

(B) June 5, 2011.

3. At time the levy of assessments becomes effective, the assessments shall be levied on a square foot basis rather than on a front foot basis.

4. From the date that the levy of assessments becomes effective, the assessments shall bear interest at the rate of 4.24% per annum.

5. For a period of thirty (30) days from the date of written notification that the levy of assessments will become effective on a date certain, the owners may pay the whole of the assessment against their property without interest to the City Treasurer.

6. Assessments not paid in full by the date specified shall be certified together with the interest to accrue, by the city Clerk to the County Clerk, and collected in ten (10) annual installments in the same manner as other taxes.

NOW, THEREFORE, BE IT ORDAINED BY THE GOVERNING BODY OF THE CITY OF LEAWOOD, KANSAS:

Section 1. Special assessments to pay the cost of said improvement with accrued interest, be and the same are hereby levied against the several lots, pieces and parcels of land liable for special assessment for said improvement as set out on the assessment roll on file in the City Clerk's Office and incorporated herein.

Section 2. The levy of such assessments shall be deferred interest-free and shall not be effective until the earlier occurrence of the following two events;

(A) the properties are platted and the plat recorded; or

(B) June 5, 2011.

Section 3. At the date that the levy of assessments shall become effective, such assessments with any accrued interest will be levied concurrently with general property taxes and shall be payable in annual installments. The first installments shall be payable at the time of the first payment of general property taxes following the effective date of the levy of these assessments.

Section 4. Following the effective date of the levy of the assessments, the assessments shall bear interest at the rate of 4.24% per annum.

Section 5. For a period of thirty (30) days from the date of written notification that the levy of assessments will become effective on a date certain, the owners may pay the whole of the assessment against their property without interest to the City Treasurer.

Section 6. Assessments not paid within the time established in Section 5 of this Ordinance, shall be certified, together with the interest accrued, if any, or to accrue, by the City Clerk to the County Clerk, and collected in the same manner as other taxes.

Section 7. At the time the levy of the assessments shall become effective, the assessments shall be levied on a square foot basis rather than on a front foot basis.

Section 8. Existing ordinance No. 1540 is hereby repealed and replaced by the provisions of this ordinance.

TAKE EFFECT.

Section 9. This ordinance shall take effect and be in force from and after its publication in the official City newspaper.

PASSED AND APPROVED by the Governing Body of the City of Leawood, Kansas this 16 day of ~~August, 1996~~ September, 1996.

APPROVED by the Mayor on this 16 day of ~~August, 1996~~ September, 1996.

(SEAL)

By: Marcia Rinehart
Marcia Rinehart, Mayor

Attest:

Martha Heizer
Martha Heizer, City Clerk

APPROVED AS TO FORM:

Richard S. Wetzler, City Attorney

ASSESSMENT ROLL

Improvement District
State Line Road
Project 134

Assessment Factor
$206.329684745 a front
lineal foot.

Property I.D. #	Ownership	Lineal Footage	Assessment
~~HF251314-1006~~	~~Hallbrook Farms~~	~~3,038.1215~~	~~$626,855.00~~ prepaid 12/7/95

Assessment Factor
$110.00 a front lineal foot.

HF251314-1007	Fern Stultz	288.73	12,179*
HF241314-1009	William R. Davis	332.10	14,615*

Total Deferred Assessments 26,794

*The levy of these assessments is according to Ordinance No. 1609 and is deferred without charge for interest until the earlier occurrence of the following two events:

(A) The properties are platted and the plat recorded; or

(B) June 5, 2011.

At time of levy these assessments shall bear interest at the rate of 4.24%

2639602

~~2639601~~

ORDINANCE NO. 1609

AN ORDINANCE AMENDING AND DEFERRING ASSESSMENTS PREVSIOUSLY IMPOSED BY ORDINANCE 1540 ON CERTAIN LOTS, PIECES AND PARCELS OF GROUND IN THE CITY OF LEAWOOD, KANSAS, FOR THE PURPOSE OF PAYING FOR THE COST OF IMPROVING A SECTION OF STATE LINE ROAD (IMPROVEMENT DISTRICT STATE LINE, PHASE II, PROJECT 134.

WHEREAS, pursuant to proceedings regularly had according to law, contracts have been let for the following improvement in the City of Leawood:

> Improvement of State Line Road from approximately the center line of 119th Street to approximately Five Hundred Thirteen (513) feet south of the center line of 112th Terrace.

and such contracts have been duly performed; and

WHEREAS, the Governing Body has previously determined that the total cost of such improvement is $1,348,366.00; and

WHEREAS, said Governing Body has previously determined that the portion of the cost to be assessed to abutting property owners was $754,950.00; and

WHEREAS, said Governing Body has, after due notice, met and determined the amount of such special assessments; and

WHEREAS, the Governing Body by its ordinance 1540 levied assessments on Property I.D. #HF251314-1007, owned by Fern Stultz and to Property I.D. #HF241314-1009, owned by William R. Davis [hereinafter the "Stultz and Davis Property"]; and

WHEREAS, the owners of said property did appeal the levy of said assessments to the District Court of Johnson County, Kansas in Case No. 93C 8099; and

WHEREAS, the City and the owners of said property, in connection with said litigation and with the approval of the Court, agreed that said properties should be assessed on a deferred basis in the amounts set forth in this ordinance; and

WHEREAS, a copy of the Settlement Agreement in Case No. 93 C 8099, William R. Davis and Fern Stultz, Plaintiffs, v. City of Leawood, Kansas, is on file with the City Clerk of the City of Leawood and with the Clerk of the District Court of Johnson County, Kansas; and

WHEREAS, the Governing Body finds and determines the assessments previously levied by Ordinance 1540 upon the Stultz and Davis Property should be amended and that said properties should be assessed upon the following terms:

14 00 CK

1. Special assessments of $14,615 shall be levied against the Davis property and $12,179 shall be levied against the Stultz property.

2. The levy of such assessments shall be deferred interest-free and shall not be effective until the earlier occurrence of the following two events:

(A) the properties are platted and the plat recorded; or

(B) June 5, 2011.

3. At time the levy of assessments becomes effective, the assessments shall be levied on a square foot basis rather than on a front foot basis.

4. From the date that the levy of assessments becomes effective, the assessments shall bear interest at the rate of 4.24% per annum.

5. For a period of thirty (30) days from the date of written notification that the levy of assessments will become effective on a date certain, the owners may pay the whole of the assessment against their property without interest to the City Treasurer.

6. Assessments not paid in full by the date specified shall be certified together with the interest to accrue, by the city Clerk to the County Clerk, and collected in ten (10) annual installments in the same manner as other taxes.

NOW, THEREFORE, BE IT ORDAINED BY THE GOVERNING BODY OF THE CITY OF LEAWOOD, KANSAS:

Section 1. Special assessments to pay the cost of said improvement with accrued interest, be and the same are hereby levied against the several lots, pieces and parcels of land liable for special assessment for said improvement as set out on the assessment roll on file in the City Clerk's Office and incorporated herein.

Section 2. The levy of such assessments shall be deferred interest-free and shall not be effective until the earlier occurrence of the following two events;

(A) the properties are platted and the plat recorded; or

(B) June 5, 2011.

Section 3. At the date that the levy of assessments shall become effective, such assessments with any accrued interest will be levied concurrently with general property taxes and shall be payable in annual installments. The first installments shall be payable at the time of the first payment of general property taxes following the effective date of the levy of these assessments.

Section 4. Following the effective date of the levy of the assessments, the assessments shall bear interest at the rate of 4.24% per annum.

Section 5. For a period of thirty (30) days from the date of written notification that the levy of assessments will become effective on a date certain, the owners may pay the whole of the assessment against their property without interest to the City Treasurer.

Section 6. Assessments not paid within the time established in Section 5 of this Ordinance, shall be certified, together with the interest accrued, if any, or to accrue, by the City Clerk to the County Clerk, and collected in the same manner as other taxes.

Section 7. At the time the levy of the assessments shall become effective, the assessments shall be levied on a square foot basis rather than on a front foot basis.

Section 8. Existing ordinance No. 1540 is hereby repealed and replaced by the provisions of this ordinance.

TAKE EFFECT.

Section 9. This ordinance shall take effect and be in force from and after its publication in the official City newspaper.

PASSED AND APPROVED by the Governing Body of the City of Leawood, Kansas this 16 day of ~~August, 1996~~ September, 1996.

APPROVED by the Mayor on this 16 day of ~~August, 1996~~ September, 1996.

(SEAL)

By: Marcia Rinehart
Marcia Rinehart, Mayor

Attest:

Martha Heizer
Martha Heizer, City Clerk

APPROVED AS TO FORM:

Richard S. Wetzler, City Attorney

1400

STATE OF KANSAS
COUNTY OF JOHNSON ss
FILED FOR RECORD

96 SEP 27 P 4: 07.5

SARA F. ULLMANN
REGISTER OF DEEDS

ASSESSMENT ROLL

Improvement District
State Line Road
Project 134

Assessment Factor
$206.329684745 a front
lineal foot.

Property I.D. #	Ownership	Lineal Footage	Assessment
~~HF251314-1006~~	~~Hallbrook Farms~~	~~3,038.1215~~	~~$626,855.00~~ prepaid 12/7/95

Assessment Factor
$110.00 a front lineal foot.

HF251314-1007	Fern Stultz	288.73	12,179*
HF241314-1009	William R. Davis	332.10	14,615*

Total Deferred Assessments 26,794

*The levy of these assessments is according to Ordinance No. 1609 and is deferred without charge for interest until the earlier occurrence of the following two events:

(A) The properties are platted and the plat recorded; or

(B) June 5, 2011.

At time of levy these assessments shall bear interest at the rate of 4.24%

CERTIFICATE

State of Kansas)
County of Johnson)
City of Leawood)

I, Martha Heizer, City Clerk of the City of Leawood, Kansas, hereby certify that the attached is a true and correct copy of Ordinance No. 1609 with assessment roll as the same appears in my office.

In testimony whereof, I have hereunto signed my name and affixed the seal of said city this 17th day of September, 1996.

(S E A L)

Martha Heizer, City Clerk

ORIGINAL COMPARED WITH RECORD

JOHNSON COUNTY, KANSAS
REGISTER OF DEEDS
FILED
MAR 20 1984

Ret- City of Leawood
4800 Town Center Dr.
Leawood, Ks - 66211

ORD1609

Publication Fees: $69.14

The Legal Record
600 E. Santa Fe, Suite 4
Olathe, KS 66061-3700

CITY OF LEAWOOD
ATTN: MARTHA HEIZER
4800 TOWN CENTER DR
LEAWOOD, KS 66211

Proof of Publication

STATE OF KANSAS, JOHNSON COUNTY, SS;
Tammy Schwien, of lawful age, being first duly sworn, deposes and says that she is Legal Notices Administrator of The Legal Record which is a newspaper printed in the State of Kansas, published in and of general paid circulation on a weekly, monthly or yearly basis in Johnson County, Kansas, is not a trade, religious or fraternal publication, is published at least weekly fifty (50) times a year, has been so published continuously and uninterrupted in said County and State for a period of more than five (5) years prior to the first publication of the notice attached, and has been admitted at the post office as second class matter (now called periodicals class).
That a notice was published in all editions of the regular and entire issue for the following subject matter (also identified by the following case number, if any) for 1 consecutive week(s), as follows:

ORDINANCE NO. 1609--9/17/96

Tammy Schwien
Legal Notices Administrator

Subscribed and sworn to before me on this date:
September 18, 1996

Debra Dziadura
Notary Public

DEBRA DZIADURA
Notary Public - State of Kansas

My appointment expires: August 21, 1999.

$69.14

ORDINANCE NO. 1609

First published in The Legal Record, Tuesday, September 17, 1996.

ORDINANCE NO. 1609

AN ORDINANCE AMENDING AND DEFERRING ASSESSMENTS PREVSIOUSLY IMPOSED BY ORDINANCE 1540 ON CERTAIN LOTS, PIECES AND PARCELS OF GROUND IN THE CITY OF LEAWOOD, KANSAS, FOR THE PURPOSE OF PAYING FOR THE COST OF IMPROVING A SECTION OF STATE LINE ROAD (IMPROVEMENT DISTRICT STATE LINE, PHASE II, PROJECT 134.

WHEREAS, pursuant to proceedings regularly had according to law, contracts have been let for the following improvement in the City of Leawood:

> Improvement of State Line Road from approximately the center line of 119th Street to approximately Five Hundred Thirteen (513) feet south of the center line of 112th Terrace.

and such contracts have been duly performed; and

WHEREAS, the Governing Body has previously determined that the total cost of such improvement is $1,348,366.00; and

WHEREAS, said Governing Body has previously determined that the portion of the cost to be assessed to abutting property owners was $754,950.00; and

WHEREAS, said Governing Body has, after due notice, met and determined the amount of such special assessments; and

WHEREAS, the Governing Body by its ordinance 1540 levied assessments on Property I.D. #HF251314-1007, owned by Fern Stultz and to Property I.D. #HF241314-1009 owned by William R. Davis [hereinafter the "Stultz and Davis Property"]; and

WHEREAS, the owners of said property did appeal the levy of said assessments to the District Court of Johnson County, Kansas in Case No. 93C 8099; and

WHEREAS, the City and the owners of said property, in connection with said litigation and with the approval of the Court, agreed that said properties should be assessed on a deferred basis in the amounts set forth in this ordinance; and

WHEREAS, a copy of the Settlement Agreement in Case No. 93 C 8099, William R. Davis and Fern Stultz, Plaintiffs, v. City of Leawood, Kansas, is on file with the City Clerk of the City of Leawood and with the Clerk of the District Court of Johnson County, Kansas; and

WHEREAS, the Governing Body finds and determines the assessments previously levied by Ordinance 1540 upon the Stultz and Davis Property should be amended and that said properties should be assessed upon the following terms.

1. Special assessments of $14,615 shall be levied against the Davis property and $12,179 shall be levied against the Stultz property.

2. The levy of such assessments shall be deferred interest-free and shall not be effective until the earlier occurrence of the following two events:

   (A) the properties are platted and the plat recorded; or

   (B) June 5, 2011.

3. At time the levy of assessments becomes effective, the assessments shall be levied on a square foot basis rather than on a front foot basis.

4. From the date that the levy of assessments becomes effective, the assessments shall bear interest at the rate of 4.24% per annum.

5. For a period of thirty (30) days from the date of written notification that the levy of assessments will become effective on a date certain, the owners may pay the whole of the assessment against their property without interest to the City Treasurer.

6. Assessments not paid in full by the date specified shall be certified together with the interest to accrue, by the city Clerk to the County Clerk, and collected in ten (10) annual installments in the same manner as other taxes.

NOW, THEREFORE, BE IT ORDAINED BY THE GOVERNING BODY OF THE CITY OF LEAWOOD, KANSAS:

Section 1. Special assessments to pay the cost of said improvement with accrued interest, be and the same are hereby levied against the several lots, pieces and parcels of land liable for special assessment for said improvement as set out on the assessment roll on file in the City Clerk's Office and incorporated herein.

Section 2. The levy of such assessments shall be deferred interest-free and shall not be effective until the earlier occurrence of the following two events;

   (A) the properties are platted and the plat recorded; or

   (B) June 5, 2011.

Section 3. At the date that the levy of assessments shall become effective, such assessments with any accrued interest will be levied concurrently with general property taxes and shall be payable in annual installments. The first installments shall be payable at the time of the first payment of general property taxes following the effective date of the levy of these assessments.

Section 4. Following the effective date of the levy of the assessments, the assessments shall bear interest at the rate of 4.24% per annum.

Section 5. For a period of thirty (30) days from the date of written notification that the levy of assessments will become effective on a date certain, the owners may pay the whole of the assessment against their property without interest to the City Treasurer.

Section 6. Assessments not paid within the time established in Section 5 of this Ordinance, shall be certified, together with the interest accrued, if any, or to accrue by the City Clerk to the County Clerk, and collected in the same manner as other taxes.

Section 7. At the time the levy of the assessments shall become effective, the assessments shall be levied on a square foot basis rather than on a front foot basis.

Section 8. Existing ordinance No. 1540 is hereby repealed and replaced by the provisions of this ordinance.

TAKE EFFECT.

Section 9. This ordinance shall take effect and be in force from and after its publication in the official City newspaper.

PASSED AND APPROVED by the Governing Body of the City of Leawood, Kansas this 16 day of ~~August, 1996~~ September, 1996.

APPROVED by the Mayor on this 16 day of ~~August, 1996~~ September, 1996.

(SEAL)

By: Marcia Rinehart
Marcia Rinehart, Mayor

Attest:

Martha Heizer
Martha Heizer, City Clerk

APPROVED AS TO FORM:

Richard S. Wetzler, City Attorney

ASSESSMENT ROLL

Improvement District
State Line Road
Project 134

Assessment Factor
$206.329684745 a front lineal foot.

Property I.D. #	Ownership	Lineal Footage	Assessment
~~HF251314-1006~~	~~Hallbrook Farms~~	~~3,038.1215~~	~~$626,855.00~~ prepaid 12/7/95

Assessment Factor
$110.00 a front lineal foot.

HF251314-1007	Fern Stultz	288.73	12,179*
HF241314-1009	William R. Davis	332.10	14,615*

Total Deferred Assessments 26,794

*The levy of these assessments is according to Ordinance No. 1609 and is deferred without charge for interest until the earlier occurrence of the following two events:

   (A) The properties are platted and the plat recorded; or

   (B) June 5, 2011.

At time of levy these assessments shall bear interest at the rate of 4.24%

ORDINANCE NO. 1608

AN ORDINANCE ADOPTING AN AMENDMENT TO THE LEAWOOD, KANSAS, 1993 MASTER DEVELOPMENT PLAN MAP.

WHEREAS, the Plan commission of the City of Leawood has previously adopted the Master Development Plan Map for the City pursuant to the authority granted by Kansas Statutes; and

WHEREAS, a certified copy of the Master Development Plan Map, adopted by the Plan Commission, was adopted by the Governing Body December 21, 1992; and

WHEREAS, pursuant to K.S.A. 12-747, the Master Development Plan Map adopted by the Plan Commission and any current amendments must be adopted by the Governing Body prior to its becoming effective; and

WHEREAS, a certified copy of the Amendment to the 1993 Master Development Plan Map as adopted by the Plan Commission on August 27, 1996, together with written summary of the Public Hearing thereon, have been submitted to the Governing Body;

NOW, THEREFORE, BE IT ORDAINED BY THE GOVERNING BODY OF THE CITY OF LEAWOOD:

Section 1. That the Governing Body of the City of Leawood, Kansas, hereby adopts Amendment to the 1993 Master Development Plan Map. The adopted amendment to the 1993 Master Development Plan Map modifies the Plan Map by redesignating a tract, approximately 4.0 acres in size, located on the southwest corner of College and Tomahawk Creek Parkway, commonly referred to as the Gordon Tract, from Medium Density Residential- Single Family Attached to Office.

Section 2. That there is hereby incorporated by reference the above-described amendment to the 1993 Master Development Plan Map, adopted by the Plan Commission of the City of Leawood on August 27, 1996, and adopted by the Governing Body on September 16, 1996, as set forth in Section 1 of this ordinance, such incorporation by reference being authorized by K.S.A. 12-3009 to and including 12-3012. Not less than three (3) copies of the Ordinance, to each of which shall be attached a copy of the Master Development Plan Map, 1993 Amendment, as adopted September 16, 1996, marked as or stamped "Official copy", shall be filed with the City clerk to be open to inspection and available to the public at all reasonable business hours.

Section 3. That this ordinance shall take effect and be in force from and after its publication in the official City newspaper.

Passed by the Council the 16th day of September, 1996.

Approved by the Mayor the 16th day of September, 1996.

Marcia Rinehart
Marcia Rinehart Mayor

Attest:

Martha Heizer
Martha Heizer City Clerk

APPROVED FOR FORM:

R. S. Wetzler City Attorney

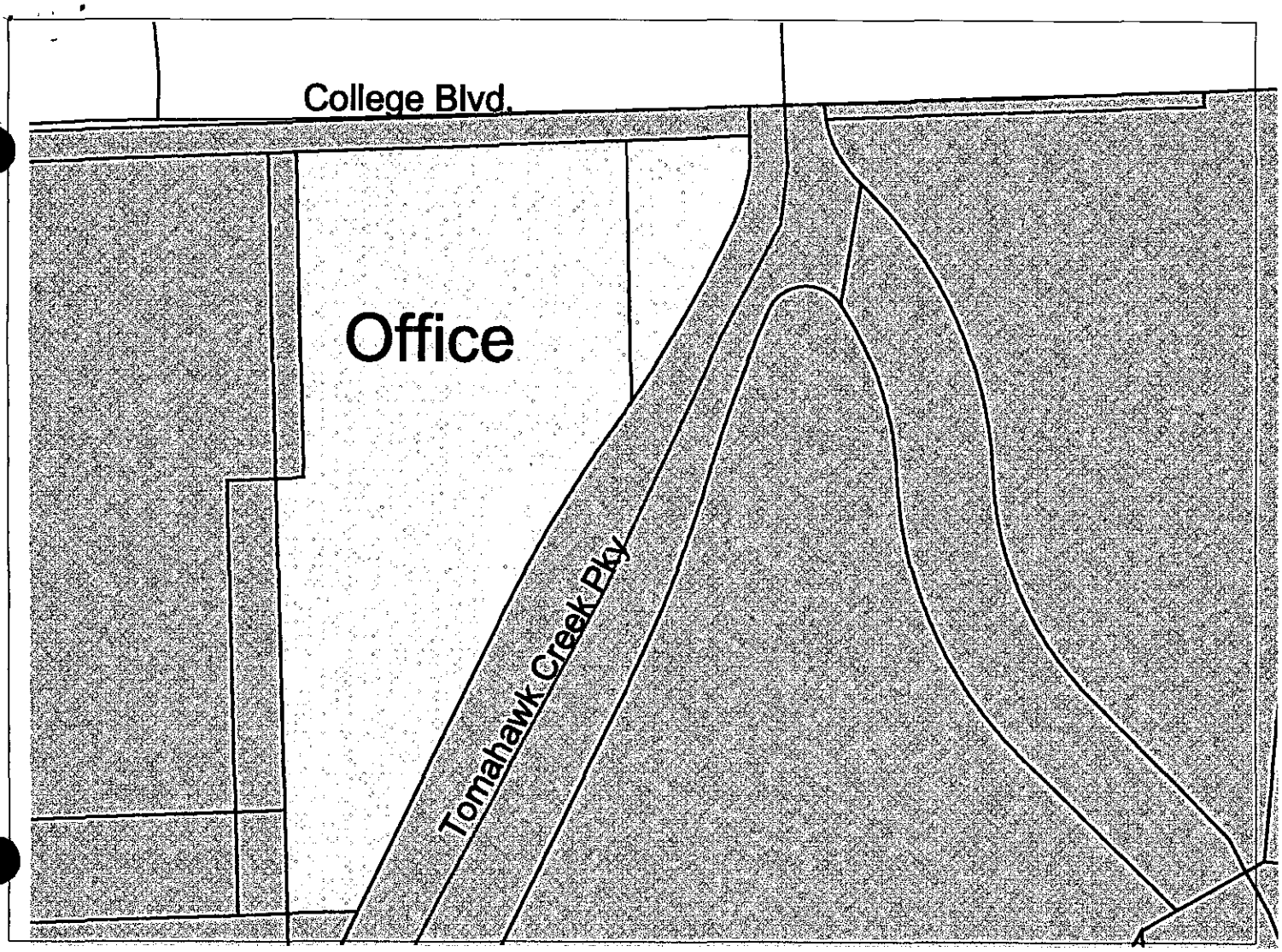

College and Tomahawk Creek Pky

Original Land Use: Medium Density Residential
Single Family Attached
Modified Land Use: Office

Acreage: 4.0

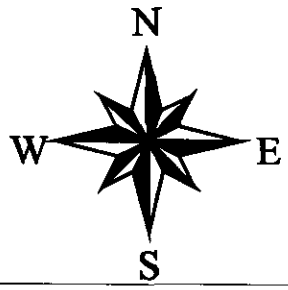

The Legal Record
600 E. Santa Fe, Suite 4
Olathe, KS 66061-3700

ORD1608

Publication Fees: $22.73

CITY OF LEAWOOD
ATTN: MARTHA HEIZER
4800 TOWN CENTER DR
LEAWOOD, KS 66211

Proof of Publication

STATE OF KANSAS, JOHNSON COUNTY, SS;
Tammy Schwien, of lawful age, being first duly sworn, deposes and says that she is Legal Notices Administrator of The Legal Record which is a newspaper printed in the State of Kansas, published in and of general paid circulation on a weekly, monthly or yearly basis in Johnson County, Kansas, is not a trade, religious or fraternal publication, is published at least weekly fifty (50) times a year, has been so published continuously and uninterrupted in said County and State for a period of more than five (5) years prior to the first publication of the notice attached, and has been admitted at the post office as second class matter (now called periodicals class).
That a notice was published in all editions of the regular and entire issue for the following subject matter (also identified by the following case number, if any) for 1 consecutive week(s), as follows:

ORDINANCE NO. 1608--9/17/96

Tammy Schwien
Legal Notices Administrator

Subscribed and sworn to before me on this date:
September 18, 1996

Debra Dziadura
Notary Public

DEBRA DZIADURA
Notary Public - State of Kansas

My appointment expires: August 21, 1999.

ORDINANCE NO. 1608

First published in The Legal Record, Tuesday, September 17, 1996.

ORDINANCE NO. 1608

AN ORDINANCE ADOPTING AN AMENDMENT TO THE LEAWOOD, KANSAS, 1993 MASTER DEVELOPMENT PLAN MAP.

WHEREAS, the Plan commission of the City of Leawood has previously adopted the Master Development Plan Map for the City pursuant to the authority granted by Kansas Statutes; and

WHEREAS, a certified copy of the Master Development Plan Map, adopted by the Plan Commission, was adopted by the Governing Body December 21, 1992; and

WHEREAS, pursuant to K.S.A. 12-747, the Master Development Plan Map adopted by the Plan Commission and any current amendments must be adopted by the Governing Body prior to its becoming effective; and

WHEREAS, a certified copy of the Amendment to the 1993 Master Development Plan Map as adopted by the Plan Commission on August 27, 1996, together with written summary of the Public Hearing thereon, have been submitted to the Governing Body;

NOW, THEREFORE, BE IT ORDAINED BY THE GOVERNING BODY OF THE CITY OF LEAWOOD:

Section 1. That the Governing Body of the City of Leawood, Kansas, hereby adopts Amendment to the 1993 Master Development Plan Map. The adopted amendment to the 1993 Master Development Plan Map modifies the Plan Map by redesignating a tract, approximately 4.0 acres in size, located on the southwest corner of College and Tomahawk Creek Parkway, commonly referred to as the Gordon Tract, from Medium Density Residential- Single Family Attached to Office.

Section 2. That there is hereby incorporated by reference the above-described amendment to the 1993 Master Development Plan Map, adopted by the Plan Commission of the City of Leawood on August 27, 1996, and adopted by the Governing Body on September 16, 1996, as set forth in Section 1 of this ordinance, such incorporation by reference being authorized by K.S.A. 12-3009 to and including 12-3012. Not less than three (3) copies of the Ordinance, to each of which shall be attached a copy of the Master Development Plan Map, 1993 Amendment, as adopted September 16, 1996, marked as or stamped "Official copy", shall be filed with the City clerk to be open to inspection and available to the public at all reasonable business hours.

Section 3. That this ordinance shall take effect and be in force from and after its publication in the official City newspaper.

Passed by the Council the 16th day of September, 1996.

Approved by the Mayor the 16th day of September, 1996.

(SEAL) Marcia Rinehart
Marcia Rinehart Mayor

Attest:
Martha Heizer
Martha Heizer City Clerk

APPROVED FOR FORM:
R. S. Wetzler City Attorney

$22.73

entire ord.

Repealed by:
ORDINANCE NO. 1636
Adopted: 2/16/96
Effective:

ORDINANCE NO. 1607

AN ORDINANCE AMENDING SECTION 4-3, OF THE "AMENDMENT OF THE LEAWOOD DEVELOPMENT ORDINANCE," PROVIDING MOVING STRUCTURES AS A SPECIAL USE.

Be it ordained by the Governing Body of the City of Leawood:

Section 1. "Amendment of Leawood Development Ordinance" Amended. That Section 4-3 of the supplement known as "Amendment of The Leawood Development Ordinance", dated December 16, 1991, is hereby amended to read as follows:

4-3 SPECIAL USE PROVISIONS

4-3.1 Special Uses Designated: Any of the following uses may be located in any district by Special Use Permit of the Governing Body after notification of adjacent and abutting property owners, public hearing, and after recommendation of the Plan Commission, under such conditions as to operation, site development, signs, and time limit as may be deemed necessary in order that such use will not seriously injure the appropriate use of the neighboring property, and will conform to the general intent and purpose of this Ordinance and shall comply with the height and area regulations of the district in which they may be located unless a variance is specifically granted by the Board of Zoning Appeals.

1) Amusement parks, privately-owned baseball or athletic fields, race tracks;

2) Aviation fields or airports, under such restrictions as may be imposed to control noise, promote safety, and prevent undue danger to aircraft or to surrounding property;

3) Cemeteries, mausoleums, or crematories for the disposal of the dead;

4) Public and private schools;

5) Churches, synagogues and other places of worship;

6) Clubs, including those where alcoholic beverages are consumed;

7) Drive-in theaters;

8) Golf driving ranges, commercial or illuminated;
9) Gun clubs, skeet shoots, or target ranges;

10) Hospitals; special care facilities for humans;not in include Group Homes as defined herein.

11) Campgrounds, picnic groves and fishing lakes, including minor and incidental concession facilities for patrons only;

12) Nursery sales office, building greenhouse, or area (wholesale or retail);

13) Nursing and convalescent homes;housing for the elderly;retirement centers and communities;not to include Group Homes as defined herein.

14) Outdoor poster panels or billboards; off-site promotional signs;

15) Veterinary clinics, dog kennels;

16) Radio, television and microwave towers;

17) Television and amateur radio antennae exceeding district height limitations.

18) Reservoirs, towers, filter beds, or water treatment plants;

19) Riding stables and tracks;

20) Wastewater treatment plant;

21) Motor hotels, motels, hotels, and convention centers;

22) Buildings, structures, and premises for public utility services, or public service corporations;

23) Temporary use of land or building for commercial or industrial purposes, provided that any building or structure constructed thereon which is not otherwise permitted in the District in which such land is situated shall be temporary, and any stored equipment or material shall be removed upon the date of expira-

tion of the special use permit, which permit shall be valid for not more than 2 years but may be renewed after public hearing;

24) Assembly halls, community centers, philanthropic organizations;

25) Child care centers, family day care homes, preschools, nursery schools, Montessori schools, private kindergartens, day care homes and group day care homes;not to include Group Homes as defined herein.

26) Off-street parking lots or off-street parking structures of a temporary or permanent nature;

27) Group boarding home for minors or adults;not to include Group Homes as defined herein.

28) Private ambulance service;

29) Bed and breakfast;

30) Horse pasturing on lots of less than 3 acres in residential districts.

31) Temporary self contained health care suites located within an attached garage are intended to provide an "in home" physical care facility as a temporary alternative to a nursing home environment. It is not intended to provide long term care lodging for anyone that would be better served by a more permanent solution. Such permanent alternate solutions may require an alteration to the home, an addition onto the home, or off-site care by a health care institution. Such use is allowed as a special use provided the following conditions are met:

a) The suites are to be freestanding self contained units including independent heating and air conditioning units and plumbing systems.

b) Not more than 2 persons shall be housed in such suite provided said housing is necessitated by a physical impairment or health care need of one or both persons and said health care need is being met by occupant or occupants of the existing home. Said person(s) residing in such health care suite shall be

either an occupant or a relative of the occupant of the home except in cases when an overnight health care provider is required.

c) A letter from a licensed doctor of medicine or osteopathy shall be submitted, along with the application for special use, verifying the need for such health care suite by the applicant or prospective resident of said suite.

d) Health care suites shall be limited to a maximum of 2 years duration. Such use may only be continued for 1 additional year and only after review and approval by the Plan Commission and City Council. Any amount of time beyond 3 years will require a permanent solution to be specified at the time the additional year is requested. Such solution shall be made a condition of approval if granted. At the end of the special use, the unit shall be removed and the garage restored to its former condition.

e) Any exterior modification of the home necessitated by the suite, such as the temporary removal of the garage door(s) to facilitate a private entry, windows, or heating or cooling units, shall be replaced with materials of an architectural likeness to the existing home. Samples of materials proppsed to be used shall be submitted with the application for approval by the Plan Commission.

f) Additional written notification shall be required to the applicant's homes association and to all property owners within 200 feet of the applicant's property.

g) Because the installation of such health care suite temporarily removes the enclosed off-street parking spaces required by ordinance, the applicant shall submit an interim plan for dealing with off-street parking for the duration of the special use.

32) The Director of Planning may upon application by the proponent issue an Administrative Special Use Permit for the use of a specified parcel of land for such temporary short-term uses as trade shows, street fairs, expositions, promotional ventures,

entertainment, seasonal sales, balloons, search lights, and tents, provided the following conditions are met:

a) The applicant shall submit in written form a complete description of the proposed use, including estimated accumulation of automobiles and persons, hours of operation, and other characteristics and effects on the neighborhood.

b) The applicant shall submit a site plan showing the location of any proposed structure.

c) The short-term special use shall not be operated longer than 10 consecutive days.

d) No more than 3 special event permits per calendar year shall be issued administratively at any location. Any additional permits may be granted by the Governing Body.

e) Upon the cessation of the short-term special use, all materials and equipment shall be promptly removed and the property restored to its normal condition.

f) Any structure used in conjunction with the special event shall be the subject of a valid building permit or tent permit.

g) The special event shall not cause undue traffic congestion or accident potential given anticipated attendance and the design of adjacent streets, intersections, and traffic controls.

h) The activity shall not cause the overcrowding of parking facilities given anticipated attendance and the possible reduction in the number of available spaces used by the event itself.

i) The special event shall not impair the usefulness, enjoyment or value of adjacent property due to the generation of excessive noise, smoke, odor, glare, litter or visual pollution.

j) If, after giving full consideration to the effect of the requested special use on the neighborhood and the community, the Director of Planning deems the special use reasonable, the special use permit for the short-term use may be approved. Conditions of operation, provision for surety bond, and other reasonable safeguards may be written into the special use permit. Such permit may be approved in any zoning district.

k) Any applicant denied an Administrative Special Use Permit shall be notified in writing of the reasons for the denial and of the opportunity to appeal the denial to the Governing Body.

33) House or Structure relocation to a permanent site within the City Limits provide the following conditions can be met:

a) The house or structure shall be found to be compatible with the surrounding houses or structures and neighborhood including, but not limited to, size, design or general archtecture, lot location, and lot size;

b) The structure be made habitable within 6 months of relocation;

c) The appicant shall conform to the provisions of Article 6. Removal of Structures" of the Leawood City Code.

Section 2. Existing Section Repealed. That existing Section 4-3 of the"Amendment of Leawood Development Ordinance", dated December 16, 1991, is hereby repealed. (Prior law: Ord. No. 1335)

Section 3. Take Effect. That this ordinance shall take effect and be in force from and after its publication in the official City newspaper.

Passed by the Council the 16th day of September 1996.

Approved by the Mayor the 16th day of September 1996.

(SEAL)

Marcia Rinehart Mayor

Attest:

Martha Heizer City Clerk

APPROVED FOR FORM:

R.S. Wetzler City Attorney

The Legal Record
600 E. Santa Fe, Suite 4
Olathe, KS 66061-3700

ORD1607

Publication Fees: $99.44

CITY OF LEAWOOD
ATTN: MARTHA HEIZER
4800 TOWN CENTER DR
LEAWOOD, KS 66211

Proof of Publication

STATE OF KANSAS, JOHNSON COUNTY, SS;
Tammy Schwien, of lawful age, being first duly sworn, deposes and says that she is Legal Notices Administrator of The Legal Record which is a newspaper printed in the State of Kansas, published in and of general paid circulation on a weekly, monthly or yearly basis in Johnson County, Kansas, is not a trade, religious or fraternal publication, is published at least weekly fifty (50) times a year, has been so published continuously and uninterrupted in said County and State for a period of more than five (5) years prior to the first publication of the notice attached, and has been admitted at the post office as second class matter (now called periodicals class).
That a notice was published in all editions of the regular and entire issue for the following subject matter (also identified by the following case number, if any) for 1 consecutive week(s), as follows:

ORDINANCE NO. 1607--9/17/96

Tammy Schwien
Legal Notices Administrator

Subscribed and sworn to before me on this date:
September 18, 1996

Debra A. Dziadura
Notary Public

DEBRA DZIADURA
Notary Public - State of Kansas

My appointment expires: August 21, 1999.

$99.44

ORDINANCE NO. 1607

First published in The Legal Record, Tuesday, September 17, 1996.

ORDINANCE NO. 1607

AN ORDINANCE AMENDING SECTION 4-3, OF THE "AMENDMENT OF THE LEAWOOD DEVELOPMENT ORDINANCE," PROVIDING MOVING STRUCTURES AS A SPECIAL USE.

Be it ordained by the Governing Body of the City of Leawood:

Section 1. "Amendment of Leawood Development Ordinance" Amended. That Section 4-3 of the supplement known as "Amendment of The Leawood Development Ordinance", dated December 16, 1991, is hereby amended to read as follows:

4-3. SPECIAL USE PROVISIONS

4-3.1 Special Uses Designated: Any of the following uses may be located in any district by Special Use Permit of the Governing Body after notification of adjacent and abutting property owners, public hearing, and after recommendation of the Plan Commission, under such conditions as to operation, site development, signs, and time limit as may be deemed necessary in order that such use will not seriously injure the appropriate use of the neighboring property, and will conform to the general intent and purpose of this Ordinance and shall comply with the height and area regulations of the district in which they may be located unless a variance is specifically granted by the Board of Zoning Appeals.

1) Amusement parks, privately-owned baseball or athletic fields, race tracks;

2) Aviation fields or airports, under such restrictions as may be imposed to control noise, promote safety, and prevent undue danger to aircraft or to surrounding property;

3) Cemeteries, mausoleums, or crematories for the disposal of the dead;

4) Public and private schools;

5) Churches, synagogues and other places of worship;

6) Clubs, including those where alcoholic beverages are consumed;

7) Drive-in theaters;

8) Golf driving ranges, commercial or illuminated;

9) Gun clubs, skeet shoots, or target ranges;

10) Hospitals; special care facilities for humans;not in include Group Homes as defined herein.

11) Campgrounds, picnic groves and fishing lakes, including minor and incidental concession facilities for patrons only;

12) Nursery sales office, building greenhouse, or area (wholesale or retail);

13) Nursing and convalescent homes;housing for the elderly;retirement centers and communities;not to include Group Homes as defined herein.

14) Outdoor poster panels or billboards; off-site promotional signs;

15) Veterinary clinics, dog kennels;

16) Radio, television and microwave towers;

17) Television and amateur radio antennae exceeding district height limitations.

18) Reservoirs, towers, filter beds, or water treatment plants;

19) Riding stables and tracks;

20) Wastewater treatment plant;

21) Motor hotels, motels, hotels, and convention centers;

22) Buildings, structures, and premises for public utility services, or public service corporations;

23) Temporary use of land or Building for commercial or industrial purposes, provided that any building or structure constructed thereon which is not otherwise permitted in the District in which such land is situated shall be temporary, and any stored equipment or material shall be removed upon the date of expiration of the special use permit, which permit shall be valid for not more than 2 years but may be renewed after public hearing;

24) Assembly halls, community centers, philanthropic organizations;

25) Child care centers, family day care homes, preschools, nursery schools, Montessori schools, private kindergartens, day care homes and group day care homes;not to include Group Homes as defined herein.

26) Off-street parking lots or off-street parking structures of a temporary or permanent nature;

27) Group boarding home for minors or adults;not to include Group Homes as defined herein.

28) Private ambulance service;

29) Bed and breakfast;

30) Horse pasturing on lots of less than 3 acres in residential districts.

31) Temporary self contained health care suites located within an attached garage are intended to provide an "in home" physical care facility as a temporary alternative to a nursing home environment. It is not intended to provide long term care lodging for anyone that would be better served by a more permanent solution. Such permanent alternate solutions may require an alteration to the home, an addition onto the home, or off-site care by a health care institution. Such use is allowed as a special use provided the following conditions are met:

a) The suites are to be freestanding self contained units including independent heating and air conditioning units and plumbing systems.

b) Not more than 2 persons shall be housed in such suite provided said housing is necessitated by a physical impairment or health care need of one or both persons and said health care need is being met by occupant or occupants of the existing home. Said person(s) residing in such health care suite shall be either an occupant or a relative of the occupant of the home except in cases when an overnight health care provider is required.

c) A letter from a licensed doctor of medicine or osteopathy shall be submitted, along with the application for special use, verifying the need for such health care suite by the applicant or prospective resident of said suite.

d) Health care suites shall be limited to a maximum of 2 years duration. Such use may only be continued for 1 additional year and only after review and approval by the Plan Commission and City Council. Any amount of time beyond 3 years will require a permanent solution to be specified at the time the additional year is requested. Such solution shall be made a condition of approval if granted. At the end of the special use, the unit shall be removed and the garage restored to its former condition.

e) Any exterior modification of the home necessitated by the suite, such as the temporary removal of the garage door(s) to facilitate a private entry, windows, or heating or cooling units, shall be replaced with materials of an architectural likeness to the existing home. Samples of materials proposed to be used shall be submitted with the application for approval by the Plan Commission.

f) Additional written notification shall be required to the applicant's homes association and to all property owners within 200 feet of the applicant's property.

g) Because the installation of such health care suite temporarily removes the enclosed off-street parking spaces required by ordinance, the applicant shall submit an interim plan for dealing with off-street parking for the duration of the special use.

32) The Director of Planning may upon application by the proponent issue an Administrative Special Use Permit for the use of a specified parcel of land for such temporary short-term uses as trade shows, street fairs, expositions, promotional ventures,

CONTINUED ON PAGE 20

CONTINUED FROM PAGE 19

entertainment, seasonal sales, balloons, search lights, and tents, provided the following conditions are met:

a) The applicant shall submit in written form a complete description of the proposed use, including estimated accumulation of automobiles and persons, hours of operation, and other characteristics and effects on the neighborhood.

b) The applicant shall submit a site plan showing the location of any proposed structure.

c) The short-term special use shall not be operated longer than 10 consecutive days.

d) No more than 3 special event permits per calendar year shall be issued administratively at any location. Any additional permits may be granted by the Governing Body.

e) Upon the cessation of the short-term special use, all materials and equipment shall be promptly removed and the property restored to its normal condition.

f) Any structure used in conjunction with the special event shall be the subject of a valid building permit or tent permit.

g) The special event shall not cause undue traffic congestion or accident potential given anticipated attendance and the design of adjacent streets, intersections, and traffic controls.

h) The activity shall not cause the overcrowding of parking facilities given anticipated attendance and the possible reduction in the number of available spaces used by the event itself.

i) The special event shall not impair the usefulness, enjoyment or value of adjacent property due to the generation of excessive noise, smoke, odor, glare, litter or visual pollution.

j) If, after giving full consideration to the effect of the requested special use on the neighborhood and the community, the Director of Planning deems the special use reasonable, the special use permit for the short-term use may be approved. Conditions of operation, provision for surety bond, and other reasonable safeguards may be written into the special use permit. Such permit may be approved in any zoning district.

k) Any applicant denied an Administrative Special Use Permit shall be notified in writing of the reasons for the denial and of the opportunity to appeal the denial to the Governing Body.

33) House or Structure relocation to a permanent site within the City Limits provide the following conditions can be met:

a) The house or structure shall be found to be compatible with the surrounding houses or structures and neighborhood including, but not limited to, size, design or general architecture, lot location, and lot size;

b) The structure be made habitable within 6 months of relocation;

c) The applicant shall conform to the provisions of Article 6. Removal of Structures" of the Leawood City Code.

Section 2. Existing Section Repealed. That existing Section 4-3 of the"Amendment of Leawood Development Ordinance", dated December 16, 1991, is hereby repealed. (Prior law: Ord. No. 1335)

Section 3. Take Effect. That this ordinance shall take effect and be in force from and after its publication in the official City newspaper.

Passed by the Council the 16th day of September 1996.

Approved by the Mayor the 16th day of September 1996.

(S E A L)

Marcia Rinehart Mayor

Attest:

Martha Helzer City Clerk

APPROVED FOR FORM:

R.S. Wetzler City Attorney

ORDINANCE NO. 1606

AN ORDINANCE AMENDING SECTION 302.0 OF THE PROPERTY MAINTENANCE CODE, MINIMUM HOUSING CODE & RENTAL INSPECTION PROGRAM, PROVIDING FOR CHANGES IN THE CODE VIOLATION ENFORCEMENT PROCEDURE.

Be it ordained by the Governing Body of the City of Leawood:

Section 1. Property Maintenance Code, Minimum Housing Code & Rental Inspection Program amended. That Section 302.0 of the Property Maintenance Code, Minimum Housing Code & Rental Inspection Program, dated August 07, 1995, is hereby amended to read as follows:

SECTION PM 302.0 ENVIRONMENTAL ENFORCEMENT PROCEDURES

PM-302.1 PREMISES VIOLATIONS

A. Persons violating the provisions of Section PM-301.6 shall be given notice of a violation by the Code Official and that notice shall be sent by certified mail to the owner and/or occupant. Conditions as cited are to be corrected within 10 days after the mailing date. If the correction is not made within the prescribed time period, the City shall initiate action to correct the nuisance and the violator shall pay the City for the actual cost of the correction in an amount determined by the City. If such cost is not paid within 10 days following the City's abatement of nuisance, the cost will be assessed and charged against the lot or parcel of ground on which the nuisance was located, and the City shall, at the time of certifying other special assessments to the County Clerk, certify the aforesaid cost to be collected by the County Treasurer and paid to the City. Liability for such cost shall be separate from and in addition to any criminal penalties.
B. Persons violating the provisions of Sections PM-301.1, PM-301.1.1, PM-301.1.2, PM-301.2, PM-301.3, PM-301.4, PM-301.5, PM-301.5.1, PM-301.7, PM-301.8, PM-301.9, PM-301.10, PM-301.10.1, PM-301.11, PM-301.12, PM-301.13, PM-301.15, and PM-301.16, shall be given notice of a violation by the Code Official and that notice shall be in accordance with Section PM-106.0.

PM-302.2 MOSQUITO CONTROL VIOLATIONS

Notice of a violation shall be made by the code official in person or by telephone and then documented by mail. The property owner shall make corrections to the satisfaction of the code official within 3 days of the written notice of violation. If the correction is not made within this time period, the City shall initiate action to correct the matter and the property owner shall pay the City for actual and administrative costs in an amount determined by the City. If the cost is not paid within 10 days following the postmarked date of billing sent to the owner, charges will be assessed against the property causing the nuisance in the manner prescribed elsewhere in this code.

Section 2. Existing Section Repealed. That existing Section 302.0 of the Property Maintenance Code, Minimum Housing Code & Rental Inspection Program, dated August 07, 1995, is hereby repealed.

Section 3. Take effect. That this ordinance shall take effect and be in force from and after its publication in the official City newspaper.

Passed by the Council the 3rd day of September, 1996.

Approved by the Mayor the 3rd day of September, 1996.

(SEAL)

Marcia Rinehart
Marcia Rinehart Mayor

Attest:

Martha Heizer
Martha Heizer City Clerk

APPROVED FOR FORM:
R. S. Wetzler City Attorney

AFFIDAVIT OF PUBLICATION

STATE OF KANSAS, JOHNSON COUNTY,ss: Georgiann Thacker being first Duly sworn, Deposes and says: That she is legal publications manager of THE JOHNSON COUNTY SUN, a semi-weekly newspaper printed in the State of Kansas, and published in and of general circulation in JOHNSON COUNTY, Kansas, and that said newspaper is not a trade, religious or fraternal publication.

Said newspaper is a semi-weekly published at least weekly 50 times a year; has been so published continuously and uninterruptedly in said county and state for a period of more than five years prior to the first publication of said notice; and has been admitted at the post office of SHAWNEE MISSION, KANSAS in said County as a second class matter.

That the attached notice is a true copy thereof and was published in the regular and entire issue of said newspaper for one consecutive day (weeks/days), the first publication thereof being made as aforesaid on the 6th day of September 19 96, with subsequent publication being made on the following dates:

_____, 19____ _____, 19____

_____, 19____ _____, 19____

Georgiann Thacker

Subscribed and sworn to before me this 6th day of September 19 96

Deanna J. Martasin
NOTARY PUBLIC

DEANNA J. MARTASIN
NOTARY PUBLIC
STATE OF KANSAS

My Commission Expires 1/27/2000

Printer's Fees 40.03

Additional Copies $_____

First Published in The Johnson County Sun, Friday, September 6, 1996.

ORDINANCE NO. 1606

AN ORDINANCE AMENDING SECTION 302.0 OF THE PROPERTY MAINTENANCE CODE, MINIMUM HOUSING CODE & RENTAL INSPECTION PROGRAM. PROVIDING FOR CHANGES IN THE CODE VIOLATION ENFORCEMENT PROCEDURE.

Be it ordained by the Governing Body of the City of Leawood:

Section 1. Property Maintenance Code, Minimum Housing Code & Rental Inspection Program amended. That Section 302.0 of the Property Maintenance Code, Minimum Housing Code & Rental Inspection Program, dated August 07, 1995, is hereby amended to read as follows:

SECTION PM 302.0 ENVIRONMENTAL ENFORCEMENT PROCEDURES

PM-302.1 PREMISES VIOLATIONS

A. Persons violating the provisions of Section PM-301.6 shall be given notice of a violation by the Code Official and that notice shall be sent by certified mail to the owner and/or occupant. Conditions as cited are to be corrected within 10 days after the mailing date. If the correction is not made within the prescribed time period, the City shall initiate action to correct the nuisance and the violator shall pay the City for the actual cost of the correction in an amount determined by the City. If such cost is not paid within 10 days following the City's abatement of nuisance, the cost will be assessed and charged against the lot or parcel of ground on which the nuisance was located, and the City shall, at the time of certifying other special assessments to the County Clerk, certify the aforesaid cost to be collected by the County Treasurer and paid to the City. Liability for such cost shall be separate from and in addition to any criminal penalties.

B. Persons violating the provisions of Sections PM-301.1, PM-301.1.1, PM-301.1.2, PM-301.2, PM-301.3, PM-301.4, PM-301.5, PM-301.5.1, PM-301.7, PM-301.8, PM-301.9, PM-301.10, PM-301.10.1, PM-301.11, PM-301.12, PM-301.13, PM-301.15, and PM-301.16 shall be given notice of violation by the Code Official and that notice shall be in accordance with Section PM-106.0.

PM-302.2 MOSQUITO CONTROL VIOLATIONS

Notice of a violation shall be made by the code official in person or by telephone and then documented by mail. The property owner shall make corrections to the satisfaction of the code official within 3 days of the written notice of violation. If the correction is not made within this time period, the City shall initiate action to correct the matter and the property owner shall pay the City for actual and administrative costs in an amount determined by the City. If the cost is not paid within 10 days following the postmarked date of billing sent to the owner, charges will be assessed against the property causing the nuisance in the manner prescribed elsewhere in this code.

Section 2. Existing Section Repealed. That existing Section 302.0 of the Property Maintenance Code, Minimum Housing Code & Rental Inspection Program, dated August 07, 1995, is hereby repealed.

Section 3. Take effect. That this ordinance shall take effect and be in force from and after its publication in the official City newspaper.

Passed by the Council the 3rd day of September, 1996.

Approved by the Mayor the 3rd day of September, 1996.

(s) Marcia Rinehart
Marcia Rinehart
Mayor

(SEAL)
Attest:
(s) Martha Heizer
Martha Heizer
City Clerk

APPROVED FOR FORM:
(s) R.S. Wetzler
R.S. Wetzler
City Attorney

(16655 1F-JC)

ORDINANCE NO. 1605

AN ORDINANCE ESTABLISHING THE 1997 ANNUAL ASSESSMENT FOR THE LEAWOOD SEWER SYSTEM.

Be it ordained by the Governing Body of the City of Leawood:

Section 1. 1997 ANNUAL ASSESSMENT. That pursuant to the terms of Section 15-104 of the Code of the City of Leawood, the following shall be the formula to establish the 1997 annual assessment for all users of the Leawood Sewer System:

User Charge = Volume Charge + Customer Service Charge + Replacement Cost Charge;

Volume Charge = $1.5750 per 1000 gallons of water used. The minimum volume for residential users shall be 33,000 gallons per year; the minimum volume for commercial users shall be 12,000 gallons per year;

Customer Service Charge = $95.45 per user per unit;

Replacement Cost = $90.76/account (for 1997);

Special Charge = $25.45/account; Debt Service, Public Works Facility; Sanitary Sewer Projects

Section 2. PUBLICATION. That this ordinance shall be published once each week for two consecutive weeks in the official City newspaper.

Section 3. TAKE EFFECT. That this ordinance shall take effect and be in force from and after its publication in the official City newspaper.

Passed by the Council the 19th day of August, 1996.

Approved by the Mayor the 19th day of August, 1996.

(S E A L)

Marcia Rinehart

Mayor Marcia Rinehart

Attest:

Martha Heizer

Martha Heizer, City Clerk

APPROVED FOR FORM:

Richard S. Wetzler, City Attorney

G:WORD\97USRORD.DOC

DATE: **August 1, 1996**

TO: **Martha Heizer, City Clerk**

FROM: **Joe Johnson, P.E., Acting Director of Public Works**

RE: **1997 Leawood Sanitary Sewer System**
Sewer User Charges

The following is the cost allocation in accordance with Chapter XV of the CITY CODE of the City of Leawood, Kansas.

Treatment Cost Allocations:

Treatment Cost (K.C. Mo. Contract)	**$777,200**	**$777,200**
Personal Services:		
Wages @ 90%	256,835	
Overtime Wages	5,000	
Workman's Compensation @ 90%	0,000	
Indirect Labor Cost @ 90%	24,895	
Social Security		
Unemployment Compensation		
KPERS		
Insurance		
TOTAL:	**$286,730.00**	**$286,730**
Legal Services @ 25%	0.00	
TOTAL:	**$286,730.00**	
Vehicle Cost		
Insurance Expense	$ 14,500	
Vehicle Maintenance/Operation	11,600	
Fuel, Oil, and Lubricants	7,500	
TOTAL:	**$ 33,600.00**	**$33,600.00**
Equipment Cost		
Rental	500	
Equipment Insurance	0	
Equipment Parts	2,200	
Equipment Maintenance/Operations	3,550	
Equipment Purchases/Lease	105,000	
TOTAL:	**$ 111,250.00**	**$111,250.00**
TOTAL TREATMENT COST ALLOCATION		**$1,208,780.00**

Customer Service Cost Allocation

Wages @ 10%	$ 28,572
Indirect Labor Costs @ 10%	2,766
Workman's Compensation @10%	0
Uniform Rental and Accessories	3,000
Printing, Notices and Recording Fees	1,000
Administrative Expenses	93,797
Legal Services @ 75%	750
Engineering Services	15,000
Medical Examinations	750
Training, Seminars & Prof. Organize.	2,100
Water Usage Data	800
Billing Cost (Jo.Co.)	450
Utility Allocation	7,500
Insurance (self insured)	3,000
Building/Grounds Maintenance	1,430
Materials and Supplies	9,000

TOTAL CUSTOMER SERVICE COST **$169,915.00**

Usage Data:

Contributed flow	445,074,300 Gallons
Infiltration/Inflow	222,537,150 Gallons
Total Flow	667,611,450 Gallons
Number of Connections	5,509
Treatment Cost Allocation	$1,028,780.00
Customer Service Cost	$169,915.00
Repair/Replacement Cost	$500,000.00
Debt Repayment	$140,254.00

The following calculations are used to determine the Annual User Cost to users of the Leawood Sanitary Sewer System.

Volume Charge (VC):

VC = Treatment Cost/Total Flow in 1,000 Gallons
VC = $1,208,780/667,611.450 (1,000 gal.)
VC = $1.8106/1,000 Gallons

Customer Service Charge (CS)

CS = Service Cost + (I/I)x(VC) / Number of Connections
CS = (169,915 + (222,537.150 x $1.8106))/5,509
CS = $103.98 per connection

Replacement and Repair Costs (RC)

RC = Replacement and Repair Cost / No. of Connections
RC = 500,000.00 / 5,509
RC = $90.76 per connection

1997 Calculated Sanitary Sewer User Costs

Volume Charge	**$1.8106 per 1000 gallons**
Customer Service Charge	**$103.98 per connection**
Replacement/Repair	**$90.76 per connection**

1996 Rate Comparison

	Year 1996		Year 1997	
Minimum user 33,000 gallon per year				
Volume Charge	$1.4846	48.99	$1.8106	59.75
Customer Service Charge	$85.15	85.15	$103.98	103.98
Replacement/Repair	$136.41	136.41	$90.76	90.76
TOTAL		**$270.55**		**$254.49**
Average user 80,000 gallons per year				
Volume Charge	$1.4846	118.77	$1.8106	144.85
Customer Service Charge	85.15	85.15	$1.0398	103.98
Replacement/Repair	$136.41	136.41	$90.76	90.76
TOTAL		**340.33**		**$339.59**

Minimum User Decrease	**-5.94%**		
Average User Decrease	**-.217%**		
User Revenue Generated	**$1,878,674.00**		
Revenue Required	**$1,720,517.00**	**EXCESS**	**$158,157.08**

K:97user

Recommended 1997 Sanitary Sewer User Fee

Volume Charge	$1.5750	per 1000 gallons
Customer Service Charge	$ 95.45	per connection
Replacement/Repair Charge	$ 90.76	per connection

Minimum User Costs (33,000 gallons per year)

Volume Charge	$1.5750	$51.97
Customer Service Charge	$95.45	$95.45
Replacement/Repair	$90.76	$90.76
	TOTAL	**$238.18**

Average User Cost (80,000 Gallons per Year)

Volume Charge	$1.5750	$126.00
Customer Service Charge	$95.45	$95.45
Replacement/Repair Charge	$90.76	$90.76
	TOTAL	**$312.21**

Comparison with Adopted 1996 Sanitary Sewer User Charge

Minimum User Decrease	-6.28%	
Average User Decrease	-1.18%	
User revenue generated	$1,726,823	
Revenue required	$1,720,517	Surplus $6,305.91

1997 SPECIAL BILLING

Special Billing for Debt Repayment for the Public Works Maintenance Facility, Somerset & Lee Sanitary Sewer Reconstruction, and the 83rd Street Sanitary Sewer Relief System. The following debt remains outstanding with final payouts shown in parenthesis.

Public Works Facility	$97,500.00	(1999)
Public Works Salt Storage	1,812.00	(1997)
Sanitary Sewer Projects	$185,000.00	(1997)
Refunding	$124,260.00	(1999)

The 1997 debt repayment of $140,254.00 including principal and interest is simply divided by the number of connections to the sanitary sewer system. This tabulation is shown below:

Bond Principal Repayment	$119,656.00
Bond Interest Payment	$ 20,598.00
Number of Connections	5,509

Special Bill (SB)

SB = Principal + Interest / number of connections
SB = $119,656 + $20,598/5,509
SB = $140,254 / 5,509
SB = $25.45 per connection

The Legal Record
600 E. Santa Fe, Suite 4
Olathe, KS 66061-3700

ORD1605

Publication Fees: $33.81

CITY OF LEAWOOD
ATTN: MARTHA HEIZER
4800 TOWN CENTER DR
LEAWOOD, KS 66211

Proof of Publication

STATE OF KANSAS, JOHNSON COUNTY, SS;
Tammy Schwien, of lawful age, being first duly sworn, deposes and says that she is Legal Notices Administrator of The Legal Record which is a newspaper printed in the State of Kansas, published in and of general paid circulation on a weekly, monthly or yearly basis in Johnson County, Kansas, is not a trade, religious or fraternal publication, is published at least weekly fifty (50) times a year, has been so published continuously and uninterrupted in said County and State for a period of more than five (5) years prior to the first publication of the notice attached, and has been admitted at the post office as second class matter (now called periodicals class).
That a notice was published in all editions of the regular and entire issue for the following subject matter (also identified by the following case number, if any) for 2 consecutive week(s), as follows:

ORDINANCE NO. 1605--8/20/96, 8/27/96

Tammy Schwien
Legal Notices Administrator

Subscribed and sworn to before me on this date:
August 28, 1996

Debra Dziadura
Notary Public

DEBRA DZIADURA
Notary Public - State of Kansas

My appointment expires: August 21, 1999.

ORDINANCE NO. 1605

First published in The Legal Record, Tuesday, August 20, 1996.

ORDINANCE NO. 1605

AN ORDINANCE ESTABLISHING THE 1997 ANNUAL ASSESSMENT FOR THE LEAWOOD SEWER SYSTEM.

Be it ordained by the Governing Body of the City of Leawood:

Section 1. 1997 ANNUAL ASSESSMENT. That pursuant to the terms of Section 15-104 of the Code of the City of Leawood, the following shall be the formula to establish the 1997 annual assessment for all users of the Leawood Sewer System.

User Charge = Volume Charge + Customer Service Charge + Replacement Cost Charge;

Volume Charge = $1.5750 per 1000 gallons of water used. The minimum volume for residential users shall be 33,000 gallons per year; the minimum volume for commercial users shall be 12,000 gallons per year;

Customer Service Charge = $95.45 per user per unit;

Replacement Cost = $90.76/account (for 1997);

Special Charge = $25.45/account; Debt Service, Public Works Facility; Sanitary Sewer Projects

Section 2. PUBLICATION. That this ordinance shall be published once each week for two consecutive weeks in the official City newspaper.

Section 3. TAKE EFFECT. That this ordinance shall take effect and be in force from and after its publication in the official City newspaper.

Passed by the Council the 19th day of August, 1996.

Approved by the Mayor the 19th day of August, 1996.

(SEAL)

Marcia Rinehart
Mayor Marcia Rinehart

Attest:

Martha Heizer
Martha Heizer, City Clerk

APPROVED FOR FORM:

Richard S. Wetzler, City Attorney

$33.81

ORDINANCE NO. 1604

AN ORDINANCE AMENDING SECTION 4-1, OF THE LEAWOOD DEVELOPMENT ORDINANCE, PROVIDING FOR CHANGES IN PROVISIONS FOR SATELLITE DISHES.

Be it ordained by the Governing Body of the City of Leawood:

Section 1. Leawood Development Ordinance Amended. That Section 4-1 of the Leawood Development Ordinance, dated November 11, 1990, is hereby amended to read as follows:

4-1 ACCESSORY USES

4-1.1 General Conditions: All accessory buildings, structures, and uses shall be so constructed, maintained and conducted as to not produce noise, vibration, concussion, dust, dirt, fly ash, odor, noxious gases, heat or glare which is injurious, damaging, unhealthy, disturbing so as to create a public nuisance and shall be located on the premises of the main use.

4-1.2 Location and Height of Accessory Uses, Buildings and Structures:

a) Location: No accessory use, building, or structure permitted by this ordinance may be located in a required yard, except as otherwise specifically authorized.

b) Location Exceptions:

1) Swimming pools, tennis court perimeter fences and play equipment shall maintain a minimum of 10 feet from side and rear property lines.

2) Fences other than tennis court perimeter fences, walls, and retaining walls may be placed on property line. Retaining walls so constructed to provide for a patio or similar use shall not be exempt from the minimum yard requirements set forth in this ordinance unless specifically authorized at development plan approval.

3) Concrete at grade patios may extend to property line.

c) Accessory Building and Structure Height Limitations: No accessory building or structure permitted by this ordinance shall exceed

one floor level and a height of 15 feet measured from ground level. Agricultural (AG) District accessory uses and structures shall be exempt from this requirement.

4-1.3 Permitted Accessory Uses, Buildings and Structures: Accessory uses, buildings, and structures shall be permitted in the following districts.

a) Agricultural Districts
   1) Any structure used in conjunction with a permitted use;
   2) Any accessory use allowed in "R" districts may be used in conjunction with a single family home;
   3) Signs permitted in Section 4-5 of this ordinance;
   4) Windmills, wind-driven power generators are permitted provided that any such structure complies with all applicable zoning regulations.
   5) Living quarters for farm attendants may be located in an accessory building in the Agricultural (AG) District provided the building code can be met.

b) Residential Districts
   1) Solar collector provided that all components servicing the collector panel are concealed and all exposed metal shall be finished with warm earth tones or black, in color;

   2) Satellite receiving dish antennae in excess of one meter shall:
      a) Require a building permit prior to installation;
      b) Be ground mounted;
      c) Be located only in rear yards no closer than 10 feet to any property line;
      d) Maintain a height not to exceed 14 feet at its highest point and not larger than 10 feet in diameter;
      e) Provide sufficient landscaping to screen the back side of the dish at initial planting.
      f) Satellite dishes one meter or less in size are exempt from these regulations.

3) Readily moveable sports,recreation or outdoor cooking equipment;

4) In ground swimming pool;

5) Home Occupations; (See Section 4-8 of this ordinance);

6) Fence,walls and retaining walls (Sealed engineering plans shall be submitted and approved prior to construction of any wall or retaining wall 4 feet in height or higher);

7) Garage sales limited to 2 sales per year (4 days per sale);

8) Sample sales limited to 2 sales per year (4 days per sale;)

9) Children's play equipment including swing sets, jungle gyms, sandboxes, playhouses, and, other related equipment provided playhouses do not exceed 15 feet in total height measured from the ground to the highest point;

10) Flag pole;

11) Wood decks (attached);

12) Concrete patios including stone, brick, and pavers but not including asphalt;

13) Bath house, pool house, and cabana only in conjunction with swimming pools;

14) Statuary, arbors, trellises, firewood piles for home use;

15) Storage or parking of major recreational equipment including boats with trailers, pop-up campers, and motorized recreational vehicles, provided that such storage or parking shall be limited to private garages, rear yards screened from neighboring views of private homes and in the driveways of private homes. Such vehicles and equipment shall not encroach onto public property or obstruct any sidewalk

and also provided that the placement of such vehicles and equipment shall be located on a hard surface asphalt pavement or concrete pad designed to accommodate such use;

16) Horse pasturing shall be permitted as an accessory use in Planned Large Lot Single Family Residential (RP-A) District provided that a minimum lot area of 3 acres can be maintained;

17) Hobby or craft activities operated by the occupant only provided that articles produced or constructed are not sold on the premises;

18) Signs permitted in Section 4-5 of this ordinance;

19) Mother's day out programs and preschools shall be permitted accessory uses in church, religious, educational, and community buildings.

20) An estate sale for purposes of this ordinance shall mean a sale conducted on the premises (lot or parcel of land) by the owner or said premises for the specific purpose of selling personal possessions and/or belongs that shall have been acquired or which have accumulated at said premises over the course of time. In no event shall "estate" include possessions that are not owned by resident or have been transferred to the site specifically for purposes of sale. Estate Sales shall be permitted provided the following conditions have been met:

a. Residents within 200 feet have been notified by regular mail postmarked not less than 10 days prior to the date of the sale.

b. Means of parking and traffic control have been established and coordinated with the police and public works departments.

c. Signage shall be limited to that permitted by this ordinance.

d. Tents or other accessory structures; food vendors; and/or any other such atypical residential uses shall require Special Use Permits as provided in Section 4-3.1(31) dealing with temporary short term uses.

e. Sales limited to 1 per calendar year per location, operated for not more than 4 consecutive days during daylight hours.

f. Permit required.

21) Tennis courts and paved play areas, commonly referred to as "Sport Courts" provided the following are met:

a. All courts require a building permit.

b. Plans must be submitted to the city staff for approval. Said review shall be based upon compliance with the following standards: The need for screening to protect the privacy of adjoining properties, compatibility to any lighting, and surface runoff. These standards are to be considered minimums and other factors may be considerations at the discretion of the Direct of Planning and Development.

c. If a permit is denied, the applicant may appeal the decision to the Plan Commission.

d. Courts shall not be built in front of the building lines and must be located at least 10 feet from a rear or side lot line. Screen plantings may be required within this area to muffle noise and block lights.

e. Fences for courts may be up to 12 feet in height and shall be of chain link fabric and shall be located at least 10 feet from a rear or interior side lot line.

f. Courts shall be designed so that the surface water will be carried to the street or storm drainage system on the owner's property, or by underground pipe to the public street or storm drainage system, or if across other ownerships, easements must be obtained.

g. All court lighting must be submitted to the Plan Commission for their approval. A lighting plan shall be submitted which indicates the lumins at the property line

and distance to the nearest structures. The type of fixture shall be specified. A lighted court, if approved by the Plan Commission, may be required to have additional screening in order to mitigate the affect of lighting on any adjoining properties.

c) Planned Apartment House Residential (RP-3) and Planned Cluster Residential (RP-4) Districts (Additional Uses)

1) Parking areas; (plan approved)

2) Signs permitted in Section 4-5 of this ordinance;

3) Tenant used recreation facilities including minor buildings (plan approved);

4) Trash collection centers;

5) Power generators;

6) Vending machines located inside tenant buildings.

d) Office, Commercial, Industrial and Special Development Districts

1) Off street parking lots as approved in the final development plan;

2) Signs permitted in Section 4-5 of this ordinance;

3) Food service and vending machines located inside of a building;

4) Private garage for motor vehicles; (plan approved)

5) Living quarters for maintenance personnel;

6) Low level exterior lighting;

7) Flagpoles;

8) Health club for employees or tenants when located inside of the primary building;

9) Day care center for employees or tenants when located inside of the primary building;

10) Restaurants, cafeterias, drug stores, gift shops and newsstands when located inside of the building;

11) Fencing as approved in the final development plan;

12) Pharmaceutical sales, medicines,etc. when incidental to the practice of medicine in a medical office;

13) Eyeglass sales when incidental to the practice of optometry;

14) Satellite receiving dish antennae may be placed on the roof of a building provided that the antennae shall only be located on a flat roof and shall be screened from view. The screen shall be architecturally compatible with the structure as to shape, size, color and bulk;

15) Solar Collector (plan approved)

a) Any system incorporated into a commercial building shall be integrated into the basic form and main body of the building. If roof mounted, all collector panels shall fit into the form of the roof; if the building's roof is sloped or if "rack" mounting is used on a flat roof, the mounting must be concealed from view at street level. Exposed rack supports and freestanding collectors apart from the main building are not permitted.

b) Roof mounted solar energy systems mounted on "accessory or detached buildings" are allowed on detached garages or swimming pool equipment buildings. Detached "greenhouses" are also acceptable. All such energy systems mounted on accessory or detached buildings shall conform to the requirements outlined in paragraph (a). No freestanding panels or panel racks shall be allowed.

c) In an active or photovaltaic system, all components servicing the collector panels shall be concealed including mechanical piping, electrical conduits, etc.

d) All exposed metal - including the framework of active collector panels or exposed mullions and framework of passive systems shall be of finished warm earth tones, or black, in color. Clear unpainted aluminum shall not be allowed.

4-1.4 Prohibited Accessory Uses

a) No accessory building may be used for residential dwelling purposes at any time except as specifically authorized in the Agricultural (AG) District.

b) Outdoor storage, except as specifically authorized in the district regulations.

c) Standing or parked advertising trailers.

Section 2. Existing Section Repealed. That existing Section 4-1 of the Leawood Development Ordinance, dated November 19, 1990, is hereby repealed. "Prior Law: Ordinance 1299"

Section 3. Take Effect. That this ordinance shall take effect and be in force from and after its publication in the official City newspaper.

Passed by the Council the 19th day of August, 1996.

Approved by the Mayor the 19th day of August, 1996.

(S E A L)

Marcia Rinehart
Marcia Rinehart Mayor

Attest:

Martha Heizer
Martha Heizer City Clerk

APPROVED FOR FORM:

R.S. Wetzler City Attorney

ORD1604

Publication Fees: $135.29

The Legal Record
600 E. Santa Fe, Suite 4
Olathe, KS 66061-3700

CITY OF LEAWOOD
ATTN: MARTHA HEIZER
4800 TOWN CENTER DR
LEAWOOD, KS 66211

Proof of Publication

STATE OF KANSAS, JOHNSON COUNTY, SS;
Tammy Schwien, of lawful age, being first duly sworn, deposes and says that she is Legal Notices Administrator of The Legal Record which is a newspaper printed in the State of Kansas, published in and of general paid circulation on a weekly, monthly or yearly basis in Johnson County, Kansas, is not a trade, religious or fraternal publication, is published at least weekly fifty (50) times a year, has been so published continuously and uninterrupted in said County and State for a period of more than five (5) years prior to the first publication of the notice attached, and has been admitted at the post office as second class matter (now called periodicals class).
That a notice was published in all editions of the regular and entire issue for the following subject matter (also identified by the following case number, if any) for 1 consecutive week(s), as follows:

ORDINANCE NO. 1604--8/20/96

Tammy Schwien
Legal Notices Administrator

Subscribed and sworn to before me on this date:
August 21, 1996

Debra Dziadura
Notary Public

DEBRA DZIADURA
Notary Public - State of Kansas

My appointment expires: August 21, 1999.

$135.29

ORDINANCE NO. 1604

First published in The Legal Record, Tuesday, August 20, 1996.

ORDINANCE NO. 1604

AN ORDINANCE AMENDING SECTION 4-1, OF THE LEAWOOD DEVELOPMENT ORDINANCE, PROVIDING FOR CHANGES IN PROVISIONS FOR SATELLITE DISHES.

Be it ordained by the Governing Body of the City of Leawood:

Section 1. Leawood Development Ordinance Amended. That Section 4-1 of the Leawood Development Ordinance, dated November 12, 1990, is hereby amended to read as follows:

4-1 ACCESSORY USES

4-1.1 General Conditions: All accessory buildings, structures, and uses shall be so constructed, maintained and conducted as to not produce noise, vibration, concussion, dust, dirt, fly ash, odor, noxious gases, heat or glare which is injurious, damaging, unhealthy, disturbing so as to create a public nuisance and shall be located on the premises of the main use.

4-1.2 Location and Height of Accessory Uses, Buildings and Structures:

a) Location: No accessory use, building, or structure permitted by this ordinance may be located in a required yard, except as otherwise specifically authorized.

b) Location Exceptions:

1) Swimming pools, tennis court perimeter fences and play equipment shall maintain a minimum of 10 feet from side and rear property lines.

2) Fences other than tennis court perimeter fences, walls, and retaining walls may be placed on property line. Retaining walls so constructed to provide for a patio or similar use shall not be exempt from the minimum yard requirements set forth in this ordinance unless specifically authorized at development plan approval.

3) Concrete at grade patios may extend to property line.

c) Accessory Building and Structure Height Limitations: No accessory building or structure permitted by this ordinance shall exceed one floor level and a height of 15 feet measured from ground level. Agricultural (AG) District accessory uses and structures shall be exempt from this requirement.

4-1.3 Permitted Accessory Uses, Buildings and Structures: Accessory uses, buildings, and structures shall be permitted in the following districts.

a) Agricultural Districts

1) Any structure used in conjunction with a permitted use;

2) Any accessory use allowed in "R" districts may be used in conjunction with a single family home;

3) Signs permitted in Section 4-5 of this ordinance;

4) Windmills, wind-driven power generators are permitted provided that any such structure complies with all applicable zoning regulations.

5) Living quarters for farm attendants may be located in an accessory building in the Agricultural (AG) District provided the building code can be met.

b) Residential Districts

1) Solar collector provided that all components servicing the collector panel are concealed and all exposed metal shall be finished with warm earth tones or black, in color;

2) Satellite receiving dish antennae in excess of one meter shall:

a) Require a building permit prior to installation;

b) Be ground mounted;

c) Be located only in rear yards no closer than 10 feet to any property line;

d) Maintain a height not to exceed 14 feet at its highest point and not larger than 10 feet in diameter;

e) Provide sufficient landscaping to screen the back side of the dish at initial planting.

f) Satellite dishes one meter or less in size are exempt from these regulations.

3) Readily moveable sports, recreation or outdoor cooking equipment;

4) In ground swimming pool;

5) Home Occupations; (See Section 4-9 of this ordinance);

6) Fence, walls and retaining walls (Sealed engineering plans shall be submitted and approved prior to construction of any wall or retaining wall 4 feet in height or higher);

7) Garage sales limited to 2 sales per year (4 days per sale);

8) Sample sales limited to 2 sales per year (4 days per sale;)

9) Children's play equipment including swing sets, jungle gyms, sandboxes, playhouses, and other related equipment provided playhouses do not exceed 15 feet in total height measured from the ground to the highest point;

10) Flag pole;

11) Wood decks (attached);

12) Concrete patios including stone, brick, and pavers but not including asphalt;

13) Bath house, pool house, and cabana only in conjunction with swimming pools;

14) Statuary, arbors, trellises, firewood piles for home use;

15) Storage or parking of major recreational equipment including boats with trailers, pop-up campers, and motorized recreational vehicles, provided that such storage or parking shall be limited to private garages, rear yards screened from neighboring views of private homes and in the driveways of private homes. Such vehicles and equipment shall not encroach onto public property or obstruct any sidewalk and also provided that the placement of such vehicles and equipment shall be located on a hard surface asphalt pavement or concrete pad designed to accommodate such use;

16) Horse pasturing shall be permitted as an accessory use in Planned Large Lot Single Family Residential (RP-A) District provided that a minimum lot area of 3 acres can be maintained;

17) Hobby or craft activities operated by the occupant only provided that articles produced or constructed are not sold on the premises;

18) Signs permitted in Section 4-5 of this ordinance;

19) Mother's day out programs and preschools shall be permitted accessory uses in church, religious, educational, and community buildings.

20) An estate sale for purposes of this ordinance shall mean a sale conducted on the premises (lot or parcel of land) by the owner or said premises for the specific purpose of selling personal possessions and/or belongs that shall have been acquired or which have accumulated at said premises over the course of time. In no event shall "estate" include possessions that are not owned by resident or have been transferred to the site specifically for purposes of sale. Estate Sales shall be permitted provided the following conditions have been met:

a. Residents within 200 feet have been notified by regular mail postmarked not less than 10 days prior to the date of the sale.

b. Means of parking and traffic control have been established and coordinated with the police and public works departments.

c. Signage shall be limited to that permitted by this ordinance.

d. Tents or other accessory structures; food vendors; and/or any other such atypical residential uses shall require Special Use Permits as provided in Section 4-3.1(31) dealing with temporary short term uses.

e. Sales limited to 1 per calendar year per location; operated for not more than 4 consecutive days during daylight hours.

f. Permit required.

21) Tennis courts and paved play areas, commonly referred to as "Sport Courts" provided the following are met:

a. All courts require a building permit.

b. Plans must be submitted to the city

CONTINUED ON PAGE 19

staff for approval. Said review shall be based upon compliance with the following standards: The need for screening to protect the privacy of adjoining properties, compatibility to any lighting, and surface runoff. These standards are to be considered minimums and other factors may be considerations at the discretion of the Direct of Planning and Development.

c. If a permit is denied, the applicant may appeal the decision to the Plan Commission.

d. Courts shall not be built in front of the building lines and must be located at least 10 feet from a rear or side lot line. Screen plantings may be required within this area to muffle noise and block lights.

e. Fences for courts may be up to 12 feet in height and shall be of chain link fabric and shall be located at least 10 feet from a rear or interior side lot line.

f. Courts shall be designed so that the surface water will be carried to the street or storm drainage system on the owner's property, or by underground pipe to the public street or storm drainage system, or if across other ownerships, easements must be obtained.

g. All court lighting must be submitted to the Plan Commission for their approval. A lighting plan shall be submitted which indicates the lumins at the property line and distance to the nearest structures. The type of fixture shall be specified. A lighted court, if approved by the Plan Commission, may be required to have additional screening in order to mitigate the affect of lighting on any adjoining properties.

c) Planned Apartment House Residential (RP-3) and Planned Cluster Residential (RP-4) Districts (Additional Uses)

1) Parking areas; (plan approved)

2) Signs permitted in Section 4-5 of this ordinance;

3) Tenant used recreation facilities including minor buildings (plan approved);

4) Trash collection centers;

5) Power generators;

6) Vending machines located inside tenant buildings.

d) Office, Commercial, Industrial and Special Development Districts

1) Off street parking lots as approved in the final development plan;

2) Signs permitted in Section 4-5 of this ordinance;

3) Food service and vending machines located inside of a building;

4) Private garage for motor vehicles; (plan approved)

5) Living quarters for maintenance personnel;

6) Low level exterior lighting;

7) Flagpoles;

8) Health club for employees or tenants when located inside of the primary building;

9) Day care center for employees or tenants when located inside of the primary building;

10) Restaurants, cafeterias, drug stores, gift shops and newsstands when located inside of the building;

11) Fencing as approved in the final development plan;

12) Pharmaceutical sales, medicines, etc. when incidental to the practice of medicine in a medical office;

13) Eyeglass sales when incidental to the practice of optometry;

14) Satellite receiving dish antennae may be placed on the roof of a building provided that the antennae shall only be located on a flat roof and shall be screened from view. The screen shall be architecturally compatible with the structure as to shape, size, color and bulk;

15) Solar Collector (plan approved)

a) Any system incorporated into a commercial building shall be integrated into the basic form and main body of the building. If roof mounted, all collector panels shall fit into the form of the roof; if the building's roof is sloped or if "rack" mounting is used on a flat roof, the mounting must be concealed from view at street level. Exposed rack supports and freestanding collectors apart from the main building are not permitted.

b) Roof mounted solar energy systems mounted on "accessory or detached buildings" are allowed on detached garages or swimming pool equipment buildings. Detached "greenhouses" are also acceptable. All such energy systems mounted on accessory or detached buildings shall conform to the requirements outlined in paragraph (a). No freestanding panels or panel racks shall be allowed.

c) In an active or photovaltaic system, all components servicing the collector panels shall be concealed including mechanical piping, electrical conduits, etc.

d) All exposed metal - including the framework of active collector panels or exposed mullions and framework of passive systems shall be of finished warm earth tones, or black, in color. Clear unpainted aluminum shall not be allowed.

4-1.4 Prohibited Accessory Uses

a) No accessory building may be used for residential dwelling purposes at any time except as specifically authorized in the Agricultural (AG) District.

b) Outdoor storage, except as specifically authorized in the district regulations.

c) Standing or parked advertising trailers.

Section 2. Existing Section Repealed. That existing Section 4-1 of the Leawood Development Ordinance, dated November 19, 1990, is hereby repealed. "Prior Law: Ordinance 1299"

Section 3. Take Effect. That this ordinance shall take effect and be in force from and after its publication in the official City newspaper.

Passed by the Council the 19th day of August, 1996.

Approved by the Mayor the 19th day of August, 1996.

(S E A L)

Marcia Rinehart
Marcia Rinehart Mayor

Attest:

Martha Heizer
Martha Heizer City Clerk

APPROVED FOR FORM:

Rick Fredrick City Attorney

repealed by Ord. # 1642, 9/6/97

ORDINANCE NO. 1603

AN ORDINANCE AMENDING THE LEAWOOD DEVELOPMENT ORDINANCE, TO PROVIDE FOR A NEW ZONING CLASSIFICATION, PLANNED RURAL DENSITY SINGLE FAMILY RESIDENTIAL DISTRICT.

Be it ordained by the Governing Body of the City of Leawood:

Section 1. Leawood Development Ordinance Amended. That Section 3-16 of the Leawood Development Ordinance, dated November 19, 1990, is hereby added to read as follows:

3-16 RP-A10 PLANNED RURAL DENSITY SINGLE FAMILY RESIDENTIAL DISTRICT

A. General Purpose and Description: Property zoned and developed as RP-A10 Planned Rural Density Single Family Residential shall be to provide for single family detached dwellings on 10 acre lots and at the same time ensure proper placement on the property so as not to hinder future redevelopment including the extension of streets and utilities that would be required for rezoning to a greater density. Property zoned RP-A10 should be those tracts that correspond to the Rural Density Residential land use category identified in the Master Development Plan.

B. Principal Permitted Uses: In District RP-A10 no building, structure, land or premises shall be used, and no building or structure shall be hereafter erected, constructed, reconstructed, moved, or altered, except for one or more of the following uses:

1) Single family residential dwellings (detached).

2) Group Homes as defined herein.

3) Railroads and public or quasi-public utilities including substations.

4) Noncommercial nurseries and gardens.

5) Oil and gas wells.

C. Accessory Uses: (See Section 4-1 of this ordinance.)

D. Special Uses: (See Section 4-3 of this ordinance.)

E. Temporary Uses: The following use shall be permitted as a temporary use in the RP-A District in accordance with Section 2-4.4 of this ordinance.

1) Building or trailer for storage of materials and/or equipment necessary for construction authorized by a valid building permit, provided the location of the building or trailer has been approved by the Director of Planning and Development.

F. Bulk Regulations:

1) Front Setback: 150 feet
2) Side Setback: 50 feet
3) Rear Setback: 100 feet
4) Lot Area: 10 acres per dwelling (gross)
5) Lot Frontage: 150 feet
6) Height Limit: 2 1/2 stories

G. Parking Requirements: Refer to individual parking group in Section 4-4 of this ordinance. No single family residence shall be constructed that does not provide space for fully covered and fully enclosed parking for 2 standard passenger vehicles in an area designated as a garage, attached or integral to the residence and compatible with said residence in construction, materials, and color; nor shall any existing single family residence be altered in such a way as to incorporate existing garage space into living area unless said alteration shall provide an equivalent area of fully covered, fully enclosed parking in the form of a garage attached to or integral with said residence and compatible in construction, materials and color.

H. Signs: (See Article 4-5 of this ordinance.)

I. Landscaping and Screening Requirements: Single family dwellings shall maintain a minimum of 25% of lot area (exclusive of right-of-way) as a permeable and uncovered surface that contains living material. All land areas which are to remain unpaved and not covered by buildings shall be brought to finish grade and sodded except those areas receiving other landscaping materials. (For additional requirements see Section 4-6 of this ordinance.)

J. Sewage Disposal: Connection to a sanitary sewer system with treatment plant or an aceptable septic tank system approved by Johnson County is required for development in this district.

K. Type of Construction: Exterior walls of all dwellings shall be of brick, stone, wood, stucco, wood shingles, wood shakes, wood siding, wood paneling, wood fiber product paneling, tile or any combination thereof. Windows, doors and louvers shall be of wood or metal and glass.

1. Roofs shall be covered with:
   a) Wood Shingles: Number 1 or 2 grade
   b) Wood Shakes:
      1) Number 1 or 2 grade
      2) Minimum 1/2 inch thickness measured at butt
   c) Slate
   d) Clay Tile
   e) Concrete Tile
   f) Other Tile
      1) Synthetic slate within similar color range of slate, clay or concrete tile.
      2) Other tile or roofing materials as specifically authorized by Resolution of the Plan Commission and ordinance of the City Council provided that all building code requirements are met.
   g) Laminated Composition Shingles:
      1) Architectural shingle with shadow lines and or relief imitating a wood shingle or wood shake.
      2) Required to be installed with sheet metal valleys and flashings.
      3) Required to be installed with preformed ridge shingles.
      4) Have the appearance and color range of natural weathered cedar shingles or weathered cedar shakes.
      5) Must use a minimum of five (5) color blend granules.
      6) Required to be placed on solid decking. All existing roofing materials shall be removed down to the stringers and/or 1/4's.
      7) Minimum thickness 3/16 inch measured at exposed butt end of overlap creating the shaddow line or individual thickness of the ply of roof material.
      8) Required to be U.L. Class A fire rated material.
      9) Required to be a minimum of 330 lbs/square.

2. Flat roofs or roofs with a pitch of less than 3 inches per foot, in addition to the materials permitted herein, for other roofs, may also be covered with

metal, built-up asphalt, or single ply elastomeric membrane.

L. Type of Construction - Residential Design Manufactured Homes: Exterior walls of all residential design manufactured Homes shall be of brick, stone, wood, stucco, wood shingles, wood shakes, wood siding, wood paneling, wood fiber product paneling, tile or any combination thereof. Windows, doors and louvers shall be of wood or metal or glass.

1. All residential design manufactured homes shall have a minimum of 1200 square feet of main floor area, excluding any attached garage or porch, and the longest exterior dimension of the body shall be not more than two and one-half (2 1/2) times the shortest exterior dimension.
2. The exterior siding must be of brick, stone, wood, stucco, wood shingles, wood shakes, wood siding, wood paneling, wood fiber product paneling, tile or any combination thereof. Non-masonry siding material shall extend below the top of the exterior foundation or curtain wall and the joint shall be flashed in accordance with the city building codes.
3. All residential design manufactured homes shall be installed in accordance with the recommended installation procedures of the manufacturer and city building codes. The running gear, tongue, axles, and wheels shall be removed from the unit at the time of installation. A continuous, permanent masonry or concrete foundation, unpierced except for required ventilation and access, shall be installed under the perimeter of the home.
4. The home shall have an attached two car garage.
5. Roofing shall be the same as for single family dwellings as stated in subsection K.

Section 2. Take Effect. That this ordinance shall take effect and be in force from and after its publication in the official City newspaper.

Passed by the Council the 19th day of August, 1996.

Approved by the Mayor the 19th day of August, 1996.

(S E A L)

Marcia Rinehart
Mayor

Attest:

Martha Heizer
City Clerk

APPROVED FOR FORM:

R.S. Wetzler
City Attorney

ORD1603

Publication Fees: $71.58

The Legal Record
600 E. Santa Fe, Suite 4
Olathe, KS 66061-3700

CITY OF LEAWOOD
ATTN: MARTHA HEIZER
4800 TOWN CENTER DR
LEAWOOD, KS 66211

Proof of Publication

STATE OF KANSAS, JOHNSON COUNTY, SS;
Tammy Schwien, of lawful age, being first duly sworn, deposes and says that she is Legal Notices Administrator of The Legal Record which is a newspaper printed in the State of Kansas, published in and of general paid circulation on a weekly, monthly or yearly basis in Johnson County, Kansas, is not a trade, religious or fraternal publication, is published at least weekly fifty (50) times a year, has been so published continuously and uninterrupted in said County and State for a period of more than five (5) years prior to the first publication of the notice attached, and has been admitted at the post office as second class matter (now called periodicals class).
That a notice was published in all editions of the regular and entire issue for the following subject matter (also identified by the following case number, if any) for 1 consecutive week(s), as follows:

ORDINANCE NO. 1603--8/20/96

Tammy Schwien
Legal Notices Administrator

Subscribed and sworn to before me on this date:
August 21, 1996

Debra Dziadura
Notary Public

DEBRA DZIADURA
Notary Public - State of Kansas

My appointment expires: August 21, 1999.

$71.58

ORDINANCE NO. 1603

First published in The Legal Record, Tuesday, August 20, 1996.

ORDINANCE NO. 1603

AN ORDINANCE AMENDING THE LEAWOOD DEVELOPMENT ORDINANCE, TO PROVIDE FOR A NEW ZONING CLASSIFICATION, PLANNED RURAL DENSITY SINGLE FAMILY RESIDENTIAL DISTRICT.

Be it ordained by the Governing Body of the City of Leawood:

Section 1. Leawood Development Ordinance Amended. That Section 3-16 of the Leawood Development Ordinance, dated November 19, 1990, is hereby added to read as follows:

3-16 RP-A10 PLANNED RURAL DENSITY SINGLE FAMILY RESIDENTIAL DISTRICT

A. General Purpose and Description: Property zoned and developed as RP-A10 Planned Rural Density Single Family Residential shall be to provide for single family detached dwellings on 10 acre lots and at the same time ensure proper placement on the property so as not to hinder future redevelopment including the extension of streets and utilities that would be required for rezoning to a greater density. Property zoned RP-A10 should be those tracts that correspond to the Rural Density Residential land use category identified in the Master Development Plan.

B. Principal Permitted Uses: In District RP-A10 no building, structure, land or premises shall be used, and no building or structure shall be hereafter erected, constructed, reconstructed, moved, or altered, except for one or more of the following uses:

1) Single family residential dwellings (detached).

2) Group Homes as defined herein.

3) Railroads and public or quasi-public utilities including substations.

4) Noncommercial nurseries and gardens.

5) Oil and gas wells.

C. Accessory Uses: (See Section 4-1 of this ordinance.)

D. Special Uses: (See Section 4-3 of this ordinance.)

E. Temporary Uses: The following use shall be permitted as a temporary use in the RP-A District in accordance with Section 2-4.4 of this ordinance.

1) Building or trailer for storage of materials and/or equipment necessary for construction authorized by a valid building permit, provided the location of the building or trailer has been approved by the Director of Planning and Development.

F. Bulk Regulations:

1) Front Setback: 150 feet
2) Side Setback: 50 feet
3) Rear Setback: 100 feet
4) Lot Area: 10 acres per dwelling (gross)
5) Lot Frontage: 150 feet
6) Height Limit: 2 1/2 stories

G. Parking Requirements: Refer to individual parking group in Section 4-4 of this ordinance. No single family residence shall be constructed that does not provide space for fully covered and fully enclosed parking for 2 standard passenger vehicles in an area designated as a garage, attached or integral to the residence and compatible with said residence in construction, materials, and color; nor shall any existing single family residence be altered in such a way as to incorporate existing garage space into living area unless said alteration shall provide an equivalent area of fully covered, fully enclosed parking in the form of a garage attached to or integral with said residence and compatible in construction, materials and color.

H. Signs: (See Article 4-5 of this ordinance.)

I. Landscaping and Screening Requirements: Single family dwellings shall maintain a minimum of 25% of lot area (exclusive of right-of-way) as a permeable and uncovered surface that contains living material. All land areas which are to remain unpaved and not covered by buildings shall be brought to finish grade and sodded except those areas receiving other landscaping materials. (For additional requirements see Section 4-6 of this ordinance.)

J. Sewage Disposal: Connection to a sanitary sewer system with treatment plant or an acceptable septic tank system approved by Johnson County is required for development in this district.

K. Type of Construction: Exterior walls of all dwellings shall be of brick, stone, wood, stucco, wood shingles, wood shakes, wood siding, wood paneling, wood fiber product paneling, tile or any combination thereof. Windows, doors and louvers shall be of wood or metal and glass.

1. Roofs shall be covered with:
   a) Wood Shingles: Number 1 or 2 grade
   b) Wood Shakes:
      1) Number 1 or 2 grade
      2) Minimum 1/2 inch thickness measured at butt
   c) Slate
   d) Clay Tile
   e) Concrete Tile
   f) Other Tile
      1) Synthetic slate within similar [redacted] range [redacted] slate, clay or concrete tile.
      2) Other tile or roofing materials as specifically authorized by Resolution of the Plan Commission and ordinance of the City Council provided that all building code requirements are met.
   g) Laminated Composition Shingles:
      1) Architectural shingle with shadow lines and or relief imitating a wood shingle or wood shake.
      2) Required to be installed with sheet metal valleys and flashings.
      3) Required to be installed with preformed ridge shingles.
      4) Have the appearance and color range of natural weathered cedar shingles or weathered cedar shakes.
      5) Must use a minimum of five (5) color blend granules.
      6) Required to be placed on solid decking. All existing roofing materials shall be removed down to the stringers and/or 1/4's.
      7) Minimum thickness 3/16 inch measured at exposed butt end of overlap creating the shadow line or individual thickness of the ply of roof material.
      8) Required to be U.L. Class A fire rated material.
      9) Required to be a minimum of 330 lbs/square.

2. Flat roofs or roofs with a pitch of less than 3 inches per foot, in addition to the materials permitted herein, for other roofs, may also be covered with metal, built-up asphalt, or single ply elastomerit membrane.

L. Type of Construction - Residential Design Manufactured Homes: Exterior walls of all residential [redacted] manufactured Homes shall be of brick, ston[redacted]co, wood shingles, wood shakes, wood si[redacted]eling, wood fiber product paneling, tile or any combination thereof. Windows, doors and louvers shall be of wood or metal or glass.

1. All residential design manufactured homes shall have a minimum of 1200 square feet of main floor area, excluding any attached garage or porch, and the longest exterior dimension of the body shall be not more than two and one-half (2 1/2) times the shortest exterior dimension.
2. The exterior siding must be of brick, stone, wood, stucco, wood shingles, wood shakes, wood siding, wood paneling, wood fiber product paneling, tile or any combination thereof. Non-masonry siding material shall extend below the top of the exterior foundation or curtain wall and the joint shall be flashed in accordance with the city building codes.
3. All residential design manufactured homes shall be installed in accordance with the recommended installation procedures of the manufacturer and city building codes. The running gear, tongue, axles, and wheels shall be removed from the unit at the time of installation. A continuous, permanent masonry or concrete foundation, unpierced except for required ventilation and access, shall be installed under the perimeter of the home.
4. The home shall have an attached two car garage.
5. Roofing shall be the same as for single family dwellings as stated in subsection K.

Section 2. Take Effect. That this ordinance shall take effect and be in force from and after its publication in the official City newspaper.

Passed by the Council the 19th day of August, 1996.

Approved by the Mayor the 19th day of August [redacted]996.

(S E A L)

Marcia Rinehart
Marcia Rinehart Mayor

Attest:

Martha Heizer
Martha Heizer City Clerk

APPROVED FOR FORM:

[redacted]
City Attorney

ORDINANCE NO. 1602

AN ORDINANCE ADOPTING AN AMENDMENT TO THE LEAWOOD, KANSAS, 1993 MASTER DEVELOPMENT PLAN MAP.

WHEREAS, the Plan commission of the City of Leawood has previously adopted the Master Development Plan Map for the City pursuant to the authority granted by Kansas Statutes; and

WHEREAS, a certified copy of the Master Development Plan Map, adopted by the Plan Commission, was adopted by the Governing Body December 21, 1992; and

WHEREAS, pursuant to K.S.A. 12-747, the Master Development Plan Map adopted by the Plan Commission and any current amendments must be adopted by the Governing Body prior to its becoming effective; and

WHEREAS, a certified copy of the Amendment to the 1993 Master Development Plan Map as adopted by the Plan Commission on July 23, 1996, together with written summary of the Public Hearing thereon, have been submitted to the Governing Body;

NOW, THEREFORE, BE IT ORDAINED BY THE GOVERNING BODY OF THE CITY OF LEAWOOD:

Section 1. That the Governing Body of the City of Leawood, Kansas, hereby adopts Amendment to the 1993 Master Development Plan Map. The adopted amendment to the 1993 Master Development Plan Map modifies the Plan Map by redesignating a tract, approximately 4.0 acres in size, located on the southwest corner of College and Tomahawk Creek Parkway, commonly referred to as Tomahawk Creek Office Park, from Medium Density Residential- Single Family Attached to Office.

Section 2. That there is hereby incorporated by reference the above-described amendment to the 1993 Master Development Plan Map, adopted by the Plan Commission of the City of Leawood on July 23, 1996, and adopted by the Governing Body on August 19, 1996, as set forth in Section 1 of this ordinance, such incorporation by reference being authorized by K.S.A. 12-3009 to and including 12-3012. Not less than three (3) copies of the Ordinance, to each of which shall be attached a copy of the Master Development Plan Map, 1993 Amendment, as adopted August 19, 1996, marked as or stamped "Official copy", shall be filed with the City clerk to be open to inspection and available to the public at all reasonable business hours.

Section 3. That this ordinance shall take effect and be in force from and after its publication in the official City newspaper.

Passed by the Council the 19th day of August, 1996.

Approved by the Mayor the 19th day of August, 1996.

(SEAL)

Marcia Rinehart
Marcia Rinehart Mayor

Attest:

Martha Heizer
Martha Heizer City Clerk

APPROVED FOR FORM:
R. S. Wetzler City Attorney

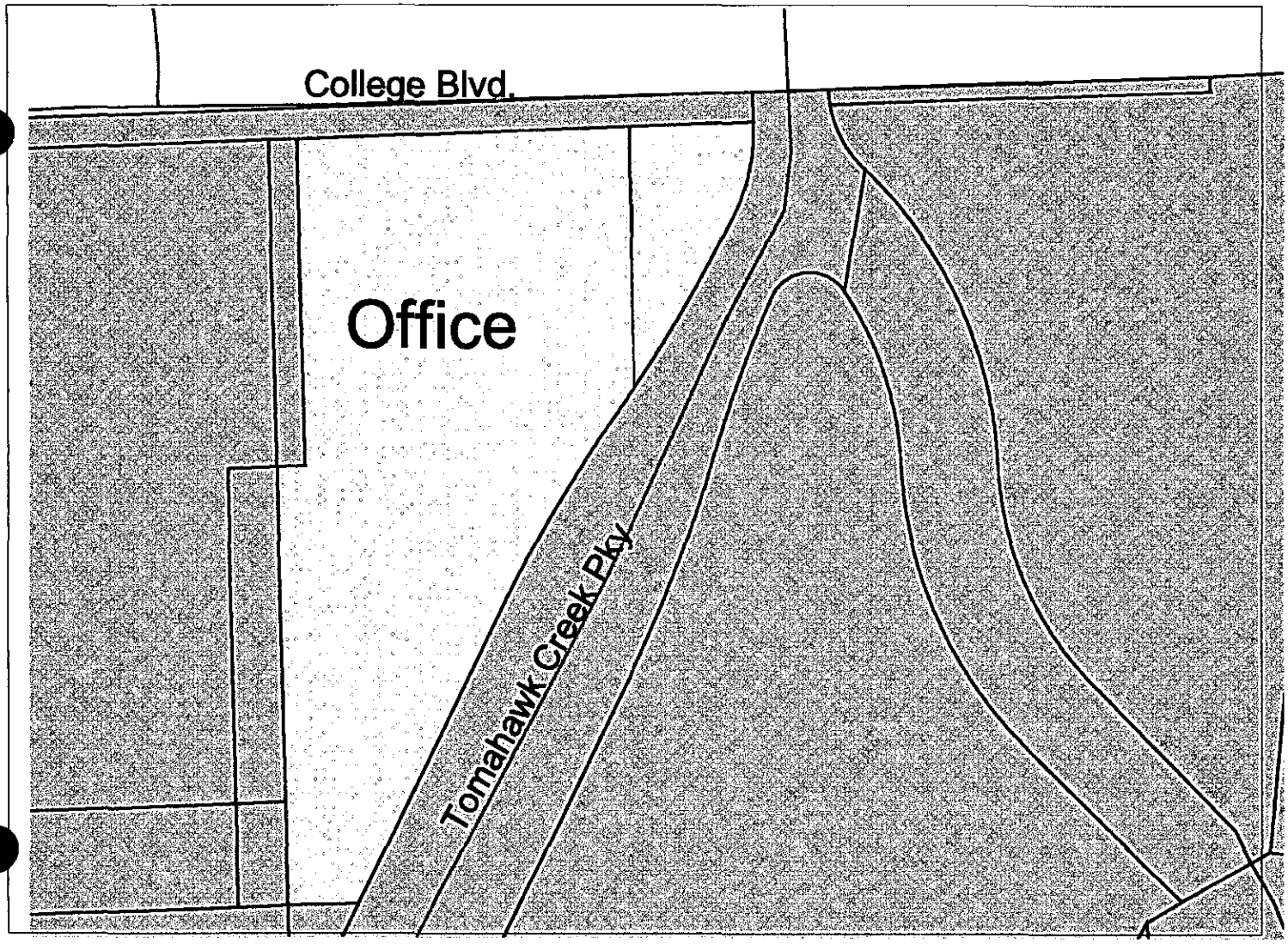

College and Tomahawk Creek Pky

Original Land Use: Medium Density Residential
Single Family Attached
Modified Land Use: Office

Acreage: 4.0

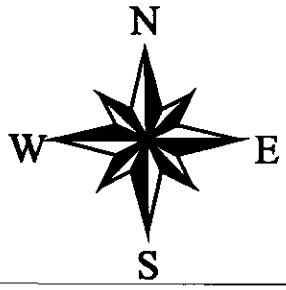

ORD1602

Publication Fees: $23.80

The Legal Record
600 E. Santa Fe, Suite 4
Olathe, KS 66061-3700

CITY OF LEAWOOD
ATTN: MARTHA HEIZER
4800 TOWN CENTER DR
LEAWOOD, KS 66211

Proof of Publication

STATE OF KANSAS, JOHNSON COUNTY, SS;
Tammy Schwien, of lawful age, being first duly sworn, deposes and says that she is Legal Notices Administrator of The Legal Record which is a newspaper printed in the State of Kansas, published in and of general paid circulation on a weekly, monthly or yearly basis in Johnson County, Kansas, is not a trade, religious or fraternal publication, is published at least weekly fifty (50) times a year, has been so published continuously and uninterrupted in said County and State for a period of more than five (5) years prior to the first publication of the notice attached, and has been admitted at the post office as second class matter (now called periodicals class).
That a notice was published in all editions of the regular and entire issue for the following subject matter (also identified by the following case number, if any) for 1 consecutive week(s), as follows:

ORDINANCE NO. 1602--8/20/96

Tammy Schwien
Legal Notices Administrator

Subscribed and sworn to before me on this date:
August 21, 1996

Debra Dziadura
Notary Public

DEBRA DZIADURA
Notary Public - State of Kansas

My appointment expires: August 21, 1999.

ORDINANCE NO. 1602

First published in The Legal Record, Tuesday, August 20, 1996.

ORDINANCE NO. 1602

AN ORDINANCE ADOPTING AN AMENDMENT TO THE LEAWOOD, KANSAS, 1993 MASTER DEVELOPMENT PLAN MAP.

WHEREAS, the Plan commission of the City of Leawood has previously adopted the Master Development Plan Map for the City pursuant to the authority granted by Kansas Statutes; and

WHEREAS, a certified copy of the Master Development Plan Map, adopted by the Plan Commission, was adopted by the Governing Body December 21, 1992; and

WHEREAS, pursuant to K.S.A. 12-747, the Master Development Plan Map adopted by the Plan Commission and any current amendments must be adopted by the Governing Body prior to its becoming effective; and

WHEREAS, a certified copy of the Amendment to the 1993 Master Development Plan Map as adopted by the Plan Commission on July 23, 1996, together with written summary of the Public Hearing thereon, have been submitted to the Governing Body;

NOW, THEREFORE, BE IT ORDAINED BY THE GOVERNING BODY OF THE CITY OF LEAWOOD:

Section 1. That the Governing Body of the City of Leawood, Kansas, hereby adopts Amendment to the 1993 Master Development Plan Map. The adopted amendment to the 1993 Master Development Plan Map modifies the Plan Map by redesignating a tract, approximately 4.0 acres in size, located on the southwest corner of College and Tomahawk Creek Parkway, commonly referred to as Tomahawk Creek Office Park, from Medium Density Residential- Single Family Attached to Office.

Section 2. That there is hereby incorporated by reference the above-described amendment to the 1993 Master Development Plan Map, adopted by the Plan Commission of the City of Leawood on July 23, 1996, and adopted by the Governing Body on August 19, 1996, as set forth in Section 1 of this ordinance, such incorporation by reference being authorized by K.S.A. 12-3009 to and including 12-3012. Not less than three (3) copies of the Ordinance, to each of which shall be attached a copy of the Master Development Plan Map, 1993 Amendment, as adopted August 19, 1996, marked as or stamped "Official copy", shall be filed with the City clerk to be open to inspection and available to the public at all reasonable business hours.

Section 3 That this ordinance shall take effect and be in force from and after its publication in the official City newspaper.

Passed by the Council the 19th day of August, 1996.

Approved by the Mayor the 19th day of August, 1996.

(SEAL)

Marcia Rinehart
Marcia Rinehart — Mayor

Attest:

Martha Heizer
Martha Heizer — City Clerk

APPROVED FOR FORM:

R. S. Metzler — City Attorney

$23.80

ORDINANCE NO. 1601

AN ORDINANCE REZONING PROPERTY (TOMAHAWK CREEK OFFICE PARK) LOCATED AT SOUTHWEST CORNER OF COLLEGE BOULEVARD AND TOMAHAWK CREEK PARKWAY FROM AG (AGRICULTURAL) TO CP-0 (PLANNED OFFICE); DIRECTING AMENDMENT OF THE OFFICIAL ZONING MAP OF THE CITY OF LEAWOOD, KANSAS; AND REINCORPORATING SAID ZONING MAP.

Be it ordained by the Governing Body of the City of Leawood:

Section 1. Rezoning of Property. That the real estate hereinafter described, to wit:

All that part of the NW 1/4 of Section 15, Township 13, Range 25, now in the City of Leawood, Johnson County, Kansas, more particularly described as follows: Commencing at a point on the North line of the NW 1/4 of said Section 15, and 887.10 feet East of the West line thereof; thence S 1° 27'33" E, along a line 887.10 feet East of and parallel to the West line of the NW 1/4 of said Section 15, a distance of 40 feet, to a point 40 feet South of the North line thereof, said point also being on the Southerly right-of-way line of College Boulevard (111th Street), as shown in Condemnation Case No. 89C4584, as recorded in Volume 2977, at page 798, in the Office of the Register of Deeds, Johnson County, Kansas, said point also being the true point of beginning of subject tract; thence continuing S 1° 27'33" E, along a line 887.10 feet East of and parallel to the West line of the NW 1/4 of said Section 15, a distance of 424.50 feet, to a point 464.47 feet South of the North line thereof; thence S 87° 50'04" W, along a line 464.47 feet South of and parallel to the North line of the NW 1/4 of said Section 15, a distance of 102.16 feet, to a point 794.94 feet East of the West line thereof; thence S 1° 27'33" E, along a line 784.94 feet East of and parallel to the West line of the NW 1/4 of said Section 15, a distance of 596.62 feet; thence N 87° 50'04" E, along a line parallel to the North line of the NW 1/4 of said Section 15, a distance of 158.77 feet, to a point on the Westerly right-of-way line of Tomahawk Creek Parkway, as now established; thence N 26° 10'43" E, along the Westerly right-of-way line of said Tomahawk Creek Parkway, a distance of 421.56 feet, to a point of curvature; thence Northeasterly, along a curve to the right, having a radius of 1812.50 feet, and a central angle of 9° 31'38", a distance of 301.39 feet, to a point of reverse curvature; thence Northeasterly, along a curve to the left, having a radius of 1812.50 feet, a central angle of 1° 15'41", and whose initial tangent bearing is N 35° 42'21" E, a distance of 39.92 feet, to a point on the Westerly line of said condemnation; thence N 1° 28' 52" W, along the Westerly line of said condemnation, a distance of 339.11 feet, to a point 40 feet South of the North line of the NW 1/4 of said Section 15; thence S 87° 50'04" W, along a line 40 feet South of and parallel to the North line of the NW 1/4 of said Section 15, and along the South line of said

condemnation, a distance of 437.12 feet, to the true point of beginning of subject tract.

now zoned AG, is hereby rezoned to CP-0.

Section 2. Official Zoning Map Amended. That the Director of Planning and Development of the City of Leawood, Kansas, is hereby directed to amend the Official Zoning Map of the City in accordance with the above and foregoing changes in zoning.

Section 3. Reincorporation of Official Zoning Map as Amended. That the Official Zoning Map of the City, as amended by the provisions of this ordinance, is hereby reincorporated and declared to be the Official Zoning Map of the City.

Section 4. Take Effect. That this ordinance shall take effect and be in force from and after its publication in the official City newspaper.

Passed by the Council the 19th day of August, 1996.

Approved by the Mayor the 19th day of August, 1996.

(S E A L)

Marcia Rinehart
Marcia Rinehart Mayor

Attest:

Martha Heizer
Martha Heizer City Clerk

APPROVED FOR FORM:
R.S. Wetzler City Attorney

The Legal Record
600 E. Santa Fe, Suite 4
Olathe, KS 66061-3700

00001601

Publication Fees: $34.93

CITY OF LEAWOOD
ATTN: MARTHA HEIZER
4800 TOWN CENTER DR
LEAWOOD, KS 66211

Proof of Publication

STATE OF KANSAS, JOHNSON COUNTY, SS;
Tammy Schwien, of lawful age, being first duly sworn, deposes and says that she is Legal Notices Administrator of The Legal Record which is a newspaper printed in the State of Kansas, published in and of general paid circulation on a weekly, monthly or yearly basis in Johnson County, Kansas, is not a trade, religious or fraternal publication, is published at least weekly fifty (50) times a year, has been so published continuously and uninterrupted in said County and State for a period of more than five (5) years prior to the first publication of the notice attached, and has been admitted at the post office as second class matter (now called periodicals class).
That a notice was published in all editions of the regular and entire issue for the following subject matter (also identified by the following case number, if any) for 1 consecutive week(s), as follows:

ORDINANCE NO. 1601--8/20/96

Tammy Schwien
Legal Notices Administrator

Subscribed and sworn to before me on this date:
August 21, 1996

Debra Dziadura
Notary Public

DEBRA DZIADURA
Notary Public - State of Kansas

My appointment expires: August 21, 1999.

$34.93

ORDINANCE NO. 1601

First published in The Legal Record, Tuesday, August 20, 1996.

ORDINANCE NO. 1601

AN ORDINANCE REZONING PROPERTY (TOMAHAWK CREEK OFFICE PARK) LOCATED AT SOUTHWEST CORNER OF COLLEGE BOULEVARD AND TOMAHAWK CREEK PARKWAY FROM AG (AGRICULTURAL) TO CP-0 (PLANNED OFFICE); DIRECTING AMENDMENT OF THE OFFICIAL ZONING MAP OF THE CITY OF LEAWOOD, KANSAS; AND REINCORPORATING SAID ZONING MAP.

Be it ordained by the Governing Body of the City of Leawood:

Section 1. Rezoning of Property. That the real estate hereinafter described, to wit:

All that part of the NW 1/4 of Section 15, Township 13, Range 25, now in the City of Leawood, Johnson County, Kansas, more particularly described as follows: Commencing at a point on the North line of the NW 1/4 of said Section 15, and 887.10 feet East of the West line thereof; thence S 1° 27'33" E, along a line 887.10 feet East of and parallel to the West line of the NW 1/4 of said Section 15, a distance of 40 feet, to a point 40 feet South of the North line thereof, said point also being on the Southerly right-of-way line of College Boulevard (111th Street), as shown in Condemnation Case No. 89C4584, as recorded in Volume 2977, at page 798, in the Office of the Register of Deeds, Johnson County, Kansas, said point also being the true point of beginning of subject tract; thence continuing S 1° 27'33" E, along a line 887.10 feet East of and parallel to the West line of the NW 1/4 of said Section 15, a distance of 424.50 feet, to a point 464.47 feet South of the North line thereof; thence S 87° 50'04" W, along a line 464.47 feet South of and parallel to the North line of the NW 1/4 of said Section 15, a distance of 102.16 feet, to a point 794.94 feet East of the West line thereof; thence S 1° 27'33" E, along a line 784.94 feet East of and parallel to the West line of the NW 1/4 of said Section 15, a distance of 596.62 feet; thence N 87° 50'04" E, along a line parallel to the North line of the NW 1/4 of said Section 15, a distance of 158.77 feet, to a point on the Westerly right-of-way line of Tomahawk Creek Parkway, as now established; thence N 26° 10'43" E, along the Westerly right-of-way line of said Tomahawk Creek Parkway, a distance of 421.56 feet, to a point of curvature; thence Northeasterly, along a curve to the right, having a radius of 1812.50 feet, and a central angle of 9° 31'38", a distance of 301.39 feet, to a point of reverse curvature; thence Northeasterly, along a curve to the left, having a radius of 1812.50 feet, a central angle of 1° 15'41", and whose initial tangent bearing is N 35° 42'21" E, a distance of 39.92 feet, to a point on the Westerly line of said condemnation; thence N 1° 29' 52" W, along the Westerly line of said condemnation, a distance of 339.11 feet, to a point 40 feet South of the North line of the NW 1/4 of said Section 15; thence S 87° 50'04" W, along a line 40 feet South of and parallel to the North line of the NW 1/4 of said Section 15, and along the South line of said condemnation, a distance of 437.12 feet, to the true point of beginning of subject tract.

now zoned AG, is hereby rezoned to CP-0.

Section 2. Official Zoning Map Amended. That the Director of Planning and Development of the City of Leawood, Kansas, is hereby directed to amend the Official Zoning Map of the City in accordance with the above and foregoing changes in zoning.

Section 3. Reincorporation of Official Zoning Map as Amended. That the Official Zoning Map of the City, as amended by the provisions of this ordinance, is hereby reincorporated and declared to be the Official Zoning Map of the City.

Section 4. Take Effect. That this ordinance shall take effect and be in force from and after its publication in the official City newspaper.

Passed by the Council the 19th day of August, 1996.

Approved by the Mayor the 19th day of August, 1996.

(S E A L)

Marcia Rinehart
Marcia Rinehart Mayor

Attest:

Martha Heizer
Martha Heizer City Clerk

APPROVED FOR FORM:
R.S. Wetzler City Attorney

ORDINANCE NO. 1600

AN ORDINANCE WHEREBY THE CITY GRANTS UNTO ITSELF A PERMANENT DRAINAGE EASEMENT IN THE STONE LEDGE SUBDIVISION AT APPROXIMATELY 154TH AND NALL AVENUE TO PROVIDE ACCESS TO UNDERGROUND CITY STORM SEWER SYSTEM THROUGH THE IRONHORSE GOLF CLUB.

Be it ordained by the Governing Body of the City of Leawood:

Section 1. That the City of Leawood, Kansas, does hereby grant unto itself a permanent drainage easement across, over, and under the following described land, to wit:

A tract of land in the South one-half of the Northwest quarter of Section 9, Township 14 South, Range 25 East in the City of Leawood, Johnson County, Kansas, being more particularly described as follows: Commencing at the Southeast corner of Lot 14, Block 1, Plat of Stone Ledge, as recorded in Plat Book 94 at Page 5; thence North 87° 26'35" East along the South line of Lot 30, Block 3, Brittany Woods, Second Plat, as recorded in Plat Book 73 at Page 21, a distance of 167.51 feet to a point, said point being the Southwest corner of Tract "A", Brittany Woods, First Plat, as recorded in Plat Book 72 at Page 1, said point also being the point of beginning of the tract of land to be described; thence North 62°15'00" East along the North line of said Tract "A" a distance of 23.49 feet; thence North 87° 26'35" East a distance of 40.28 feet; thence South 02° 33'25" East a distance of 10.00 feet to a point on the South line of said Tract "A"; thence South 87° 26'35" West along the South line of said Tract "A" a distance of 61.53 feet to the point of beginning.

Section 2. That a copy of said Permanent Drainage Easement is attached hereto and thereby incorporated by reference.

Section 3. That this ordinance shall take effect and be in force from and after its publication in the official City newspaper.

Passed by the Council the 5th day of August, 1996.

Approved by the Mayor the 5th day of August, 1996.

(S E A L)

Marcia Rinehart

Marcia Rinehart Mayor

Attest:

Martha Heizer

Martha Heizer City Clerk

APPROVED FOR FORM:

R.S. Wetzler City Attorney

The Legal Record
600 E. Santa Fe, Suite 4
Olathe, KS 66061-3700

ORD1600

Publication Fees: $22.97

CITY OF LEAWOOD
ATTN: MARTHA HEIZER
4800 TOWN CENTER DR
LEAWOOD, KS 66211

Proof of Publication

STATE OF KANSAS, JOHNSON COUNTY, SS;
Tammy Schwien, of lawful age, being first duly sworn, deposes and says that she is Legal Notices Administrator of The Legal Record which is a newspaper printed in the State of Kansas, published in and of general paid circulation on a weekly, monthly or yearly basis in Johnson County, Kansas, is not a trade, religious or fraternal publication, is published at least weekly fifty (50) times a year, has been so published continuously and uninterrupted in said County and State for a period of more than five (5) years prior to the first publication of the notice attached, and has been admitted at the post office as second class matter (now called periodicals class).
That a notice was published in all editions of the regular and entire issue for the following subject matter (also identified by the following case number, if any) for 1 consecutive week(s), as follows:

ORDINANCE NO. 1600--8/6/96

Tammy Schwien
Legal Notices Administrator

Subscribed and sworn to before me on this date:
August 7, 1996

Debra Dziadura
Notary Public

DEBRA DZIADURA
Notary Public - State of Kansas

My appointment expires: August 21, 1999.

ORDINANCE NO. 1600

First published in The Legal Record, Tuesday, August 6, 1996.

ORDINANCE NO. 1600

AN ORDINANCE WHEREBY THE CITY GRANTS UNTO ITSELF A PERMANENT DRAINAGE EASEMENT IN THE STONE LEDGE SUBDIVISION AT APPROXIMATELY 154TH AND NALL AVENUE TO PROVIDE ACCESS TO UNDERGROUND CITY STORM SEWER SYSTEM THROUGH THE IRONHORSE GOLF CLUB.

Be it ordained by the Governing Body of the City of Leawood:

Section 1: That the City of Leawood, Kansas, does hereby grant unto itself a permanent drainage easement across, over, and under the following described land, to wit:

A tract of land in the South one-half of the Northwest quarter of Section 9, Township 14 South, Range 25 East in the City of Leawood, Johnson County, Kansas, being more particularly described as follows: Commencing at the Southeast corner of Lot 14, Block 1, Plat of Stone Ledge, as recorded in Plat Book 94 at Page 5; thence North 87° 26'35" East along the South line of Lot 30, Block 3, Brittany Woods, Second Plat, as recorded in Plat Book 73 at Page 21, a distance of 167.51 feet to a point, said point being the Southwest corner of Tract "A", Brittany Woods, First Plat, as recorded in Plat Book 72 at Page 1, said point also being the point of beginning of the tract of land to be described; thence North 62° 15'00" East along the North line of said Tract "A" a distance of 23.49 feet; thence North 87° 26'35" East a distance of 40.28 feet; thence South 02° 33'25" East a distance of 10.00 feet to a point on the South line of said Tract "A"; thence South 87° 26'35' West along the South line of said Tract "A" a distance of 61.53 feet to the point of beginning.

Section 2. That a copy of said Permanent Drainage Easement is attached hereto and thereby incorporated by reference.

Section 3. That this ordinance shall take effect and be in force from and after its publication in the official City newspaper.

Passed by the Council the 5th day of August, 1996.

Approved by the Mayor the 5th day of August, 1996.

(S E A L)

Marcia Rinehart
Marcia Rinehart Mayor

Attest:

Martha Heizer
Martha Heizer City Clerk

APPROVED FOR FORM:
R.S. Wetzler City Attorney

$22.97

ORDINANCE NO. 1599

AN ORDINANCE ACCEPTING LAND FROM HALLMARK FARM ASSOCIATES BY QUIT-CLAIM DEED, LAND NORTH OF COLLEGE BOULEVARD THROUGH HALLBROOK FARMS TO BE USED AS AN EXPANSION OF EXISTING LEAWOOD PARK AT 106TH AND LEE BOULEVARD.

Be it ordained by the Governing Body of the City of Leawood:

Section 1. That the City of Leawood hereby accepts the following described tract of land, to wit:

From Hallmark Farm Associates: All that part of the South 1/2 of Section 10, Township 13, Range 25, in Leawood, Johnson County, Kansas, being more particularly described as follows: Commencing at the Southwest corner of the Southeast 1/4 of said Section 10; thence North 1°-56'-43" West along the West line of the Southeast 1/4 of said Section 10, a distance of 953.25 feet to the point of beginning of the tract of land to be herein described, said point also being on the Southeasterly line of Tract "A", "Leawood Greenway and Parks", a subdivision in said city, county and state; thence the following courses along the Southeasterly line of said Tract "A": North 65°-31'-23" East, a distance of 401.84 feet; thence South 35°-03'34" East, a distance of 100.67 feet; thence South 26°-55'27" East, a distance of 75.48 feet; thence South 36°-44'-46" East, a distance of 81.99 feet; thence South 56°-17'16" East, a distance of 103.73 feet; thence South 81°-50'-55" East, a distance of 51.15 feet; thence North 82°-28'-47" East, a distance of 204.26 feet; thence North 67°-50'32" East, a distance of 310.21 feet; thence North 60°-54'-10" East, a distance of 136.13 feet; thence North 58°-06'-27" East, a distance of 83.32 feet; thence North 57°-49'-25" East, a distance of 59.22 feet; thence North 74°-43'-33" East, a distance of 75.54 feet; thence North 65°-46'-07" East, a distance of 325.22 feet; thence North 72°-48'-48" East, a distance of 46.56 feet; thence North 87°-37'-46" East, a distance of 74.49 feet; thence North 79°-48'-20" East, a distance of 125.05 feet; thence South 84°-36'-56" East, a distance of 25.76 feet; thence North 69°-52'-11" East, a distance of 40.83 feet; thence North 51°-06'-10" East, a distance of 77.57 feet; thence North 35°-54'-50" East, a distance of 125.76 feet; thence North 19°-51'-53" East, a distance of 81.50 feet; thence North 16°-09'-08" West, a distance of 54.29 feet; thence North 87°-58'-57" East, a distance of 202.07 feet; thence South 1°-56'-47" East, departing the Southeasterly line of said Tract "A", a distance of 303.78 feet to a point on the Northerly right-of-way line of College Boulevard, as now established; thence the following courses along the Northerly right-of-way line of said College Boulevard: North

79°-07'-12" West, a distance of 48.26 feet; thence South 83°-55'-59" West, a distance of 168.17 feet; thence South 66°-23'-15" West, a distance of 165.99 feet; thence South 68°-15'-50" West, a distance of 200.23 feet; thence South 70°-59'-00" West, a distance of 247.00 feet; thence Southwesterly along a curve to the left having an initial tangent bearing of South 71°-07'-36" West, a radius of 990.89 feet, a central angle of 11°-34'-19", an arc distance of 200.13 feet; thence South 60°-18'-03" West, a distance of 128.02 feet; thence South 60°-18'-04" West, a distance of 232.99 feet; thence South 59°-59'-00" West, a distance of 98.99 feet; thence South 65°-32'-21" West, a distance of 76.94 feet; thence Southwesterly along a curve to the right having an initial tangent bearing of South 67°-34'-24" West, a radius of 1009.78 feet, a central angle of 12°-50'-48", an arc distance of 226.41 feet; thence South 83°-19'-25" West, a distance of 125.77 feet; thence North 79°-32'-25" West, a distance of 41.36 feet; thence South 86°-59'-00" West, a distance of 41.00 feet; thence South 75°-05'-41" West, a distance of 38.83 feet; thence South 86°-59'-00" West, a distance of 149.00 feet; thence South 79°-31'-26" West, a distance of 98.78 feet; thence Southwesterly along a curve to the left having an initial tangent bearing of South 80°-02'-37" West, a radius of 795.03 feet, a central angle of 23°-28'-42", an arc distance of 325.78 feet; thence South 56°-39'-09" West, a distance of 67.94 feet; thence South 57°-27'-33" West, a distance of 45.42 feet; thence South 45°-00'-40" West, a distance of 96.27 feet; thence South 69°-11'-54" West, a distance of 41.61 feet to a point on the Southeasterly line of said Tract "A"; thence the following courses along the Southeasterly line of said Tract "A": North 19°-03'-17" East, departing the Northwesterly right-of-way line of said College Boulevard, a distance of 6.83 feet; thence North 14°-31'-17" East, a distance of 160.00 feet; thence North 19°-49'-17" East, a distance of 160.00 feet; thence North 27°-27'-17" East, a distance of 309.30 feet to the point of beginning. Containing 13.560 acres, more or less.

Section 2. That a copy of said quit-claim deed is attached hereto and thereby incorporated by reference.

Section 3. That this ordinance shall take effect and be in force from and after its publication in the official City newspaper.

Passed by the Council the 5th day of August, 1996.

Approved by the Mayor the 5th day of August, 1996.

(S E A L)

Marcia Rinehart
Marcia Rinehart Mayor

Attest:

Martha Heizer
Martha Heizer City Clerk

APPROVED FOR FORM:
R.S. Wetzler City Attorney

ORD1599

Publication Fees: $42.24

The Legal Record
600 E. Santa Fe, Suite 4
Olathe, KS 66061-3700

CITY OF LEAWOOD
ATTN: MARTHA HEIZER
4800 TOWN CENTER DR
LEAWOOD, KS 66211

Proof of Publication

STATE OF KANSAS, JOHNSON COUNTY, SS;
Tammy Schwien, of lawful age, being first duly sworn, deposes and says that she is Legal Notices Administrator of The Legal Record which is a newspaper printed in the State of Kansas, published in and of general paid circulation on a weekly, monthly or yearly basis in Johnson County, Kansas, is not a trade, religious or fraternal publication, is published at least weekly fifty (50) times a year, has been so published continuously and uninterrupted in said County and State for a period of more than five (5) years prior to the first publication of the notice attached, and has been admitted at the post office as second class matter (now called periodicals class).
That a notice was published in all editions of the regular and entire issue for the following subject matter (also identified by the following case number, if any) for 1 consecutive week(s), as follows:

ORDINANCE NO. 1599--8/6/96

Tammy Schwien
Legal Notices Administrator

Subscribed and sworn to before me on this date:
August 7, 1996

Debra Dziadura
Notary Public

DEBRA DZIADURA
Notary Public - State of Kansas

My appointment expires: August 21, 1999.

$42.24

ORDINANCE NO. 1599

First published in The Legal Record, Tuesday, August 6, 1996.

ORDINANCE NO. 1599

AN ORDINANCE ACCEPTING LAND FROM HALLMARK FARM ASSOCIATES BY QUIT-CLAIM DEED, LAND NORTH OF COLLEGE BOULEVARD THROUGH HALLBROOK FARMS TO BE USED AS AN EXPANSION OF EXISTING LEAWOOD PARK AT 106TH AND LEE BOULEVARD.

Be it ordained by the Governing Body of the City of Leawood:

Section 1. That the City of Leawood hereby accepts the following described tract of land, to wit:

From Hallmark Farm Associates: All that part of the South 1/2 of Section 10, Township 13, Range 25, in Leawood, Johnson County, Kansas, being more particularly described as follows: Commencing at the Southwest corner of the Southeast 1/4 of said Section 10; thence North 1°-56'-43" West along the West line of the Southeast 1/4 of said Section 10, a distance of 953.25 feet to the point of beginning of the tract of land to be herein described, said point also being on the Southeasterly line of Tract "A", "Leawood Greenway and Parks", a subdivision in said city, county and state; thence the following courses along the Southeasterly line of said Tract "A": North 65°-31'-23" East, a distance of 401.84 feet; thence South 35°-03'34" East, a distance of 100.67 feet; thence South 26°-55'27" East, a distance of 75.48 feet; thence South 36°-44'-46" East, a distance of 81.99 feet; thence South 56°-17'16" East, a distance of 103.73 feet; thence South 81°-50'-55" East, a distance of 51.15 feet; thence North 82°-28'-47" East, a distance of 204.26 feet; thence North 67°-50'32" East, a distance of 310.21 feet; thence North 60°-54'-10" East, a distance of 136.13 feet; thence North 58°-06'-27" East, a distance of 83.32 feet; thence North 57°-49'-25" East, a distance of 59.22 feet; thence North 74°-43'-33" East, a distance of 75.54 feet; thence North 65°-46'-07" East, a distance of 325.22 feet; thence North 72°-48'-48" East, a distance of 46.56 feet; thence North 87°-37'-46" East, a distance of 74.49 feet; thence North 79°-48'-20" East, a distance of 125.05 feet; thence South 84°-36'-56" East, a distance of 25.76 feet; thence North 69°-52'-11" East, a distance of 40.83 feet; thence North 51°-06'-10" East, a distance of 77.57 feet; thence North 35°-54'-50" East, a distance of 125.76 feet; thence North 19°-51'-53" East, a distance of 81.50 feet; thence North 16°-09'-08" West, a distance of 54.29 feet; thence North 87°-58'-57" East, a distance of 202.07 feet; thence South 1°-56'-47" East, departing the Southeasterly line of said Tract "A", a distance of 303.78 feet to a point on the Northerly right-of-way line of College Boulevard, as now established; thence the following courses along the Northerly right-of-way line of said College Boulevard: North 79°-07'-12" West, a distance of 48.26 feet; thence South 83°-55'-59" West, a distance of 168.17 feet; thence South 66°-23'-15" West, a distance of 165.99 feet; thence South 68°-15'-50" West, a distance of 200.23 feet; thence South 70°-59'-00" West, a distance of 247.00 feet; thence Southwesterly along a curve to the left having an initial tangent bearing of South 71°-07'-36" West, a radius of 990.89 feet, a central angle of 11°-34'-19", an arc distance of 200.13 feet; thence South 60°-18'-03" West, a distance of 128.02 feet; thence South 60°-18'-04" West, a distance of 232.99 feet; thence South 59°-59'-00" West, a distance of 98.99 feet; thence South 65°-32'-21" West, a distance of 76.94 feet; thence Southwesterly along a curve to the right having an initial tangent bearing of South 67°-34'-24" West, a radius of 1009.78 feet, a central angle of 12°-50'-48", an arc distance of 226.41 feet; thence South 83°-19'-25" West, a distance of 125.77 feet; thence North 79°-32'-25" West, a distance of 41.36 feet; thence South 86°-59'-00" West, a distance of 41.00 feet; thence South 75°-05'-41" West, a distance of 38.83 feet; thence South 86°-59'-00" West, a distance of 149.00 feet; thence South 79°-31'-26" West, a distance of 98.78 feet; thence Southwesterly along a curve to the left having an initial tangent bearing of South 80°-02'-37" West, a radius of 795.03 feet, a central angle of 23°-28'-42", an arc distance of 325.78 feet; thence South 56°-39'-09" West, a distance of 67.94 feet; thence South 57°-27'-33" West, a distance of 45.42 feet; thence South 45°-00'-40" West, a distance of 96.27 feet; thence South 69°-11'-54" West, a distance of 41.61 feet to a point on the Southeasterly line of said Tract "A"; thence the following courses along the Southeasterly line of said Tract "A": North 19°-03'-17" East, departing the Northwesterly right-of-way line of said College Boulevard, a distance of 6.83 feet; thence North 14°-31'-17" East, a distance of 160.00 feet; thence North 19°-49'-17" East, a distance of 160.00 feet; thence North 27°-27'-17" East, a distance of 309.30 feet to the point of beginning. Containing 13.560 acres, more or less.

Section 2. That a copy of said quit-claim deed is attached hereto and thereby incorporated by reference.

Section 3. That this ordinance shall take effect and be in force from and after its publication in the official City

Passed by the Council the 5th day of August, 1996.

Approved by the Mayor the 5th day of August, 1996.

(S E A L)

Marcia Rinehart
Marcia Rinehart Mayor

Attest:

Martha Heizer
Martha Heizer City Clerk

APPROVED FOR FORM:
R.S. Wetzler City Attorney

ORDINANCE NO. 1598

AN ORDINANCE REZONING PROPERTY (STRAWBERRY HILL) LOCATED AT APPROXIMATELY 148TH & MISSION ROAD FROM AG (AGRICULTURAL) TO R-1 (SINGLE FAMILY RESIDENTIAL) ; DIRECTING AMENDMENT OF THE OFFICIAL ZONING MAP OF THE CITY OF LEAWOOD, KANSAS; AND REINCORPORATING SAID ZONING MAP.

Be it ordained by the Governing Body of the City of Leawood:

Section 1. Rezoning of Property. That the real estate hereinafter described, to wit:

> All of the North half and all of the South half of the Southwest Quarter of the Northwest Quarter of the Southwest Quarter of Section 3, Township 14 South, Range 25 East, in the City of Leawood, Johnson County, Kansas

now zoned AG, is hereby rezoned to R-1.

Section 2. Official Zoning Map Amended. That the Director of Planning and Development of the City of Leawood, Kansas, is hereby directed to amend the Official Zoning Map of the City in accordance with the above and foregoing changes in zoning.

Section 3. Reincorporation of Official Zoning Map as Amended. That the Official Zoning Map of the City, as amended by the provisions of this ordinance, is hereby reincorporated and declared to be the Official Zoning Map of the City.

Section 4. Take Effect. That this ordinance shall take effect and be in force from and after its publication in the official City newspaper.

Passed by the Council the 5th day of August, 1996.

Approved by the Mayor the 5th day of August, 1996.

(S E A L)

Marcia Rinehart
Marcia Rinehart Mayor

Attest:

Martha Heizer
Martha Heizer City Clerk

APPROVED FOR FORM:
R.S. Wetzler City Attorney

ORD1598

Publication Fees: $19.33

The Legal Record
600 E. Santa Fe, Suite 4
Olathe, KS 66061-3700

CITY OF LEAWOOD
ATTN: MARTHA HEIZER
4800 TOWN CENTER DR
LEAWOOD, KS 66211

Proof of Publication

STATE OF KANSAS, JOHNSON COUNTY, SS;
Tammy Schwien, of lawful age, being first duly sworn, deposes and says that she is Legal Notices Administrator of The Legal Record which is a newspaper printed in the State of Kansas, published in and of general paid circulation on a weekly, monthly or yearly basis in Johnson County, Kansas, is not a trade, religious or fraternal publication, is published at least weekly fifty (50) times a year, has been so published continuously and uninterrupted in said County and State for a period of more than five (5) years prior to the first publication of the notice attached, and has been admitted at the post office as second class matter (now called periodicals class).
That a notice was published in all editions of the regular and entire issue for the following subject matter (also identified by the following case number, if any) for 1 consecutive week(s), as follows:

ORDINANCE NO. 1598--8/6/96

Tammy Schwien
Legal Notices Administrator

Subscribed and sworn to before me on this date:
August 7, 1996

Debra Dziadura
Notary Public

DEBRA DZIADURA
Notary Public - State of Kansas

My appointment expires: August 21, 1999.

ORDINANCE NO. 1598

First published in The Legal Record, Tuesday, August 6, 1996.

ORDINANCE NO. 1598

AN ORDINANCE REZONING PROPERTY (STRAWBERRY HILL) LOCATED AT APPROXIMATELY 148TH & MISSION ROAD FROM AG (AGRICULTURAL) TO R-1 (SINGLE FAMILY RESIDENTIAL) ; DIRECTING AMENDMENT OF THE OFFICIAL ZONING MAP OF THE CITY OF LEAWOOD, KANSAS; AND REINCORPORATING SAID ZONING MAP.

Be it ordained by the Governing Body of the City of Leawood:

Section 1. Rezoning of Property. That the real estate hereinafter described, to wit:

All of the North half and all of the South half of the Southwest Quarter of the Northwest Quarter of the Southwest Quarter of Section 3, Township 14 South, Range 25 East, in the City of Leawood, Johnson County, Kansas

now zoned AG, is hereby rezoned to R-1.

Section 2. Official Zoning Map Amended. That the Director of Planning and Development of the City of Leawood, Kansas, is hereby directed to amend the Official Zoning Map of the City in accordance with the above and foregoing changes in zoning.

Section 3. Reincorporation of Official Zoning Map as Amended. That the Official Zoning Map of the City, as amended by the provisions of this ordinance, is hereby reincorporated and declared to be the Official Zoning Map of the City.

Section 4. Take Effect. That this ordinance shall take effect and be in force from and after its publication in the official City newspaper.

Passed by the Council the 5th day of August, 1996.

Approved by the Mayor the 5th day of August, 1996.

(S E A L)

Marcia Rinehart
Marcia Rinehart Mayor

Attest:

Martha Heizer
Martha Heizer City Clerk

APPROVED FOR FORM:
R.S. Wetzler City Attorney

$19.33

ORDINANCE NO. 1597 C

AN ORDINANCE AMENDING SECTION 1-208 OF THE CODE OF THE CITY OF LEAWOOD RELATING TO COMPENSATION FOR THE MAYOR AND COUNCILMEMBERS, AND REPEALING EXISTING SECTION.

Be it ordained by the Governing Body of the City of Leawood:

Section 1. Code Amended. That Section 1-208 of the Code of the City of Leawood, Kansas, is hereby amended to read as follows:

1-208. COMPENSATION. (a) There is hereby established 1) a salary of Nine Thousand Six Hundred Dollars ($9,600.00) per year, payable at the rate of Eight Hundred Dollars ($800.00) per month, and 2) a car allowance of Two Thousand Four Hundred Dollars ($2,400.00) per year, payable at the rate of Two Hundred Dollars ($200.00) per month, for the office of the mayor; said sums shall be paid each month until the mayor's term of office shall cease, or he or she is removed from office, or for any reason shall leave office and his or her successor shall be qualified and take over the duties of the office of mayor. Said sums shall be paid from and after January 1, 1997.

(b) There is hereby established a salary of Four Thousand Eight Hundred Dollars ($4,800.00) per year for the office of councilmember, payable at the rate of Four Hundred Dollars ($400.00) per month; said sum shall be paid each month until the councilmember's term of office shall cease, or he or she is removed from office or for any reason shall leave office and his or her successor shall be qualified and take over the office and duties of councilmember. Said sum shall be paid from and after January 1, 1997.

Section 2. Repeal of Existing Section. That existing Section 1-208 of the Code of the City of Leawood is hereby repealed.

Section 3. Take Effect. That this ordinance shall take effect and be in force from and after its publication in the official City newspaper.

Passed by the Council the 15th day of July, 1996.

Approved by the Mayor the _____ day of _____, 1996.

(S E A L)

_____
Marcia Rinehart Mayor

The Mayor not having approved this ordinance on or before the next regular Council meeting of August 5, 1996, the ordinance took effect without the mayor's signature.

Attest:

Martha Heizer City Clerk

APPROVED FOR FORM:
R.S. Wetzler City Attorney

The Legal Record
600 E. Santa Fe, Suite 4
Olathe, KS 66061-3700

ORD1597C

Publication Fees: $22.97

CITY OF LEAWOOD
ATTN: MARTHA HEIZER
4800 TOWN CENTER DR
LEAWOOD, KS 66211

Proof of Publication

STATE OF KANSAS, JOHNSON COUNTY, SS;
Tammy Schwien, of lawful age, being first duly sworn, deposes and says that she is Legal Notices Administrator of The Legal Record which is a newspaper printed in the State of Kansas, published in and of general paid circulation on a weekly, monthly or yearly basis in Johnson County, Kansas, is not a trade, religious or fraternal publication, is published at least weekly fifty (50) times a year, has been so published continuously and uninterrupted in said County and State for a period of more than five (5) years prior to the first publication of the notice attached, and has been admitted at the post office as second class matter (now called periodicals class).
That a notice was published in all editions of the regular and entire issue for the following subject matter (also identified by the following case number, if any) for 1 consecutive week(s), as follows:

ORDINANCE NO. 1597 C--8/6/96

Tammy Schwien
Legal Notices Administrator

Subscribed and sworn to before me on this date:
August 7, 1996

Debra Dziadura
Notary Public

DEBRA DZIADURA
Notary Public - State of Kansas

My appointment expires: August 21, 1999.

ORDINANCE NO. 1597 C

First published in The Legal Record, Tuesday, August 6, 1996.

ORDINANCE NO. 1597 C

AN ORDINANCE AMENDING SECTION 1-208 OF THE CODE OF THE CITY OF LEAWOOD RELATING TO COMPENSATION FOR THE MAYOR AND COUNCILMEMBERS, AND REPEALING EXISTING SECTION.

Be it ordained by the Governing Body of the City of Leawood:

Section 1. Code Amended. That Section 1-208 of the Code of the City of Leawood, Kansas, is hereby amended to read as follows:

1-208. COMPENSATION. (a) There is hereby established 1) a salary of Nine Thousand Six Hundred Dollars ($9,600.00) per year, payable at the rate of Eight Hundred Dollars ($800.00) per month, and 2) a car allowance of Two Thousand Four Hundred Dollars ($2,400.00) per year, payable at the rate of Two Hundred Dollars ($200.00) per month, for the office of the mayor; said sums shall be paid each month until the mayor's term of office shall cease, or he or she is removed from office, or for any reason shall leave office and his or her successor shall be qualified and take over the duties of the office of mayor. Said sums shall be paid from and after January 1, 1997.

(b) There is hereby established a salary of Four Thousand Eight Hundred Dollars ($4,800.00) per year for the office of councilmember, payable at the rate of Four Hundred Dollars ($400.00) per month; said sum shall be paid each month until the councilmember's term of office shall cease, or he or she is removed from office or for any reason shall leave office and his or her successor shall be qualified and take over the office and duties of councilmember. Said sum shall be paid from and after January 1, 1997.

Section 2. Repeal of Existing Section. That existing Section 1-208 of the Code of the City of Leawood is hereby repealed.

Section 3. Take Effect. That this ordinance shall take effect and be in force from and after its publication in the official City newspaper.

Passed by the Council the 15th day of July, 1996.

Approved by the Mayor the _____ day of _____, 1996.

(S E A L)

Marcia Rinehart Mayor

The Mayor not having approved this ordinance on or before the next regular Council meeting of August 5, 1996, the ordinance took effect without the mayor's signature.

Attest:

Martha Heizer City Clerk

APPROVED FOR FORM:

R.S. Wetzler City Attorney

$22.97

ORDINANCE NO. 1596

AN ORDINANCE ACCEPTING A PERMANENT UTILITY EASEMENT FROM BERNARD W. AND PAULA J. O'DONNELL FOR THE PURPOSE OF DELIVERING WATER TO THE EAST REST STATION AT IRONHORSE GOLF CLUB.

Be it ordained by the Governing Body of the City of Leawood:

Section 1. That the City of Leawood hereby accepts a permanent utility easement, along with the restrictions and reservations set forth therein, over and across the following described property, to wit:

> A 5' wide utility easement lying 2.5'either side of the following described line: Commencing at the Northwest corner of Lot 13, of the Hills of Ironhorse, 1st Plat, a subdivision in the City of Leawood, Johnson County, Kansas; thence North 88 45'33" East, a distance of 10' to the true Point of Beginning; thence South 08 12'00" West a distance of 174.94 feet; and the Point of Terminus.

Section 2. That a copy of said easement is attached hereto and thereby incorporated by reference.

Section 3. That this ordinance shall take effect and be in force from and after its publication in the official City newspaper.

Passed by the Council the 1st day of July, 1996.

Approved by the Mayor the 1st day of July, 1996.

(S E A L)

Marcia Rinehart
Marcia Rinehart Mayor

Attest:

Martha Heizer
Martha Heizer City Clerk

APPROVED FOR FORM:
R.S. Wetzler City Attorney

ORD ~~1956~~ 1596

Publication Fees: $15.63

The Legal Record
600 E. Santa Fe, Suite 4
Olathe, KS 66061-3700

CITY OF LEAWOOD
ATTN: MARTHA HEIZER
4800 TOWN CENTER DR
LEAWOOD, KS 66211

Proof of Publication

STATE OF KANSAS, JOHNSON COUNTY, SS;
Tammy Schwien, of lawful age, being first duly sworn, deposes and says that she is Legal Notices Administrator of The Legal Record which is a newspaper printed in the State of Kansas, published in and of general paid circulation on a weekly, monthly or yearly basis in Johnson County, Kansas, is not a trade, religious or fraternal publication, is published at least weekly fifty (50) times a year, has been so published continuously and uninterrupted in said County and State for a period of more than five (5) years prior to the first publication of the notice attached, and has been admitted at the post office as second class matter (now called periodicals class).
That a notice was published in all editions of the regular and entire issue for the following subject matter (also identified by the following case number, if any) for 1 consecutive week(s), as follows:

ORDINANCE NO. ~~1956~~--7/2/96
1596

Tammy Schwien
Legal Notices Administrator

Subscribed and sworn to before me on this date:
July 3, 1996

Debra Dziadura
Notary Public

DEBRA DZIADURA
Notary Public - State of Kansas

My appointment expires: August 21, 1999.

$15.63

ORDINANCE NO. 1596

First published in The Legal Record, Tuesday, July 2, 1996.

ORDINANCE NO. 1596

AN ORDINANCE ACCEPTING A PERMANENT UTILITY EASEMENT FROM BERNARD W. AND PAULA J. O'DONNELL FOR THE PURPOSE OF DELIVERING WATER TO THE EAST REST STATION AT IRONHORSE GOLF CLUB.

Be it ordained by the Governing Body of the City of Leawood:

Section 1. That the City of Leawood hereby accepts a permanent utility easement, along with the restrictions and reservations set forth therein, over and across the following described property, to wit:

A 5' wide utility easement lying 2.5' either side of the following described line: Commencing at the Northwest corner of Lot 13, of the Hills of Ironhorse, 1st Plat, a subdivision in the City of Leawood, Johnson County, Kansas; thence North 88 45'33" East, a distance of 30' to the true Point of Beginning; thence South 08 12'00" West a distance of 174.94 feet; and the Point of Terminus.

Section 2. That a copy of said easement is attached hereto and thereby incorporated by reference.

Section 3. That this ordinance shall take effect and be in force from and after its publication in the official City newspaper.

Passed by the Council the 1st day of July, 1996.

Approved by the Mayor the 1st day of July, 1996.

(S E A L)

Marcia Rinehart
Marcia Rinehart Mayor

Attest:

Martha Heizer
Martha Heizer City Clerk

APPROVED FOR FORM:

R. Sy Spitzer City Attorney

ORDINANCE NO. 1595

AN ORDINANCE ACCEPTING TRACTS OF LAND FROM THE CITY OF OVERLAND PARK, KANSAS, BY QUIT-CLAIM DEED, IN ACCORDANCE WITH AN EXCLUSION/ANNEXATION AGREEMENT BETWEEN THE CITY OF LEAWOOD AND THE CITY OF OVERLAND PARK DATED MAY 20, 1996.

Be it ordained by the Governing Body of the City of Leawood:

Section 1. That the City of Leawood hereby accepts the following described tracts of land, to wit:

From the City of Overland Park, Kansas: Tract 1. All that part of the roadway lying in the NE1/4 of Section 10, Township 14, Range 25, now in the City of Overland Park, Johnson County, Kansas, lying adjacent to the West line of Lot 31, MASTIN GARDENS, a subdivision of land now vacated in the City of Overland Park, Johnson County, Kansas, which lies North of the centerline of the abandoned right-of-way of the St. Louis and San Francisco Railway Company, as formerly located.

AND

Tract 2. All that part of 151st St. right-of-way lying in the NE1/4 of Section 10, Township 14, Range 25, now in the City of Overland Park, Johnson County, Kansas, lying adjacent to the North line of the West 246.30 feet of Lot 31, Mastin Gardens, a subdivision of land now vacated in the City of Overland Park, Johnson County, Kansas, and also that part of said 151st St. right-of-way lying North of the roadway adjacent to the West line of said Lot 31.

Section 2. That a copy of said quit-claim deed is attached hereto and thereby incorporated by reference.

Section 3. That this ordinance shall take effect and be in force from and after its publication in the official City newspaper.

Passed by the Council the 1st day of July, 1996.

Approved by the Mayor the 1st day of July, 1996.

(S E A L)

Marcia Rinehart

Marcia Rinehart Mayor

Attest:

Martha Heizer

Martha Heizer City Clerk

APPROVED FOR FORM:

R.S. Wetzler City Attorney

ORD1595

Publication Fees: $20.18

The Legal Record
600 E. Santa Fe, Suite 4
Olathe, KS 66061-3700

CITY OF LEAWOOD
ATTN: MARTHA HEIZER
4800 TOWN CENTER DR
LEAWOOD, KS 66211

Proof of Publication

STATE OF KANSAS, JOHNSON COUNTY, SS;
Tammy Schwien, of lawful age, being first duly sworn, deposes and says that she is Legal Notices Administrator of The Legal Record which is a newspaper printed in the State of Kansas, published in and of general paid circulation on a weekly, monthly or yearly basis in Johnson County, Kansas, is not a trade, religious or fraternal publication, is published at least weekly fifty (50) times a year, has been so published continuously and uninterrupted in said County and State for a period of more than five (5) years prior to the first publication of the notice attached, and has been admitted at the post office as second class matter (now called periodicals class).
That a notice was published in all editions of the regular and entire issue for the following subject matter (also identified by the following case number, if any) for 1 consecutive week(s), as follows:

ORDINANCE NO. 1595--7/2/96

Tammy Schwien
Legal Notices Administrator

Subscribed and sworn to before me on this date:
July 3, 1996

Debra Dziadura
Notary Public

DEBRA DZIADURA
Notary Public - State of Kansas

My appointment expires: August 21, 1999.

ORDINANCE NO. 1595

First published in The Legal Record, Tuesday, July 2, 1996.

ORDINANCE NO. 1595

AN ORDINANCE ACCEPTING TRACTS OF LAND FROM THE CITY OF OVERLAND PARK, KANSAS, BY QUIT-CLAIM DEED, IN ACCORDANCE WITH AN EXCLUSION/ANNEXATION AGREEMENT BETWEEN THE CITY OF LEAWOOD AND THE CITY OF OVERLAND PARK DATED MAY 20, 1996.

Be it ordained by the Governing Body of the City of Leawood:

Section 1. That the City of Leawood hereby accepts the following described tracts of land, to-wit:

From the City of Overland Park, Kansas: Tract 1. All that part of the roadway lying in the NE1/4 of Section 10, Township 14, Range 25, now in the City of Overland Park, Johnson County, Kansas, lying adjacent to the West line of Lot 31, MASTIN GARDENS, a subdivision of land now vacated in the City of Overland Park, Johnson County, Kansas, which lies North of the centerline of the abandoned right-of-way of the St. Louis and San Francisco Railway Company, as formerly located.

AND

Tract 2. All that part of 151st St. right-of-way lying in the NE1/4 of Section 10, Township 14, Range 25, now in the City of Overland Park, Johnson County, Kansas, lying adjacent to the North line of the West 246.30 feet of Lot 31, Mastin Gardens, a subdivision of land now vacated in the City of Overland Park, Johnson County, Kansas, and also that part of said 151st St. right-of-way lying North of the roadway adjacent to the West line of said Lot 31.

Section 2. That a copy of said quit-claim deed is attached hereto and thereby incorporated by reference.

Section 3. That this ordinance shall take effect and be in force from and after its publication in the official City newspaper.

Passed by the Council the 1st day of July, 1996.

Approved by the Mayor the 1st day of July, 1996.

(S E A L)
Attest:

Marcia Rinehart, Mayor

Martha Heizer, City Clerk

APPROVED FOR FORM:
R.S. Wetzler, City Attorney

$20.18

ORDINANCE NO. 1594

AN ORDINANCE INCLUDING, ANNEXING AND INCORPORATING CERTAIN LAND LOCATED ON THE SOUTH SIDE OF 151ST STREET, EAST OF THE HALF SECTION LINE OF SECTION 10, TOWNSHIP 14 SOUTH, RANGE 25 EAST INTO THE BOUNDARIES OF THE CITY OF LEAWOOD, KANSAS.

WHEREAS, an Exclusion/Annexation Agreement dated May 20, 1996, (hereinafter the "Agreement") was entered by the City of Overland Park, Kansas (hereinafter "Overland Park") and the City of Leawood, Kansas (hereinafter "Leawood"); and

WHEREAS, said Agreement concerns the possible exclusion of land located on the south side of 151st Street, east of the half section line of Section 10, Township 14 South, Range 25 East, from the boundaries of Overland Park and the annexation of the same land into Leawood; and

WHEREAS, on May 22, 1996, Leawood filed with the City Clerk of Overland Park the original Petition to Overland Park to Exclude land from the City of Overland Park pursuant to K.S.A. 12-504 *et seq.* spoken of in paragraph 1 of said Agreement; and

WHEREAS, said Petition to Overland Park to Exclude was executed by all of the owners of land which is legally described in SECTION 1 of this ordinance, below; and

WHEREAS, on May 22, 1996, Leawood filed with the City Clerk of Overland Park a copy of the Consent to Annexation of said land by Leawood spoken of in paragraph 2 of said Agreement, the original of which Consent had been filed with the City Clerk of Leawood on May 22, 1996; and

WHEREAS, on May 21, 1996, Leawood delivered to the City Clerk of Overland Park the check in the amount of $125.97 spoken of in paragraph 3 of said Agreement; and

WHEREAS, on May 21, 1996, Leawood delivered to the City Clerk of Overland Park the check in the amount of $10.00 spoken of in paragraph 4 of said Agreement; and

WHEREAS, on May 21, 1996, Leawood delivered to the City Clerk of Overland Park the check in the amount of $677.00 spoken of in paragraph 5 of said Agreement; and

WHEREAS, on May 21, 1996, Leawood delivered to the City Clerk of Overland Park the check in the amount of $1,079.94 spoken of in paragraph 6 of the Agreement; and

WHEREAS, thereupon on May 24, 1996, the City Clerk of Overland Park caused to be published for the first time and on May 31, 1996, caused to be published for the second time in *The Overland Park Sun*, the Notice of Public Hearing spoken of in paragraph 7 of said Agreement giving the date, day, place and time of the public hearing on the proposed exclusion of land; and

WHEREAS, on June 10, 1996, at 7:30 p.m. in the Council Chambers, Overland Park City Hall, 8500 Santa Fe, the Governing Body of the City of Overland Park held a public hearing on the Petition to Exclude of the owners of the said land during which comments from all interested persons were heard; and

WHEREAS, no written objection to the proposed exclusion was filed with the City Clerk of Overland Park at or before the hearing held on June 10, 1996, by any owner of any tract proposed to be excluded, nor by any owner of any adjoining tract who would have been a proper party to the petition but who was not a party to it; and

WHEREAS, the Governing Body of Overland Park found and determined that proper notice of the public hearing on the proposed exclusion of land held on June 10, 1996, was given by publication in *The Overland Park Sun*; and

WHEREAS, the Governing Body of the Overland Park found and determined that no private rights would be injured or endangered by the exclusion of said land from the boundaries of Overland Park, that the public would suffer no loss or inconvenience thereby, and that justice required the granting of the Petition; and

WHEREAS, the Governing Body of Overland Park found and determined that it would be in the best interests of the City of Overland Park, the public, and the owners of said land to exclude the said land from Overland Park and for Leawood to annex it; and

WHEREAS, the Governing Body of Overland Park on June 10, 1996, passed Ordinance. No. A-DE-1984, Section 1 of which excluded said land from the boundaries of Overland Park, and Section 4 of which made said ordinance effective and placed it in force from and after 12:01 a.m. on June 20, 1996, and after its publication; and

WHEREAS, said land is composed of four tracts, each of which is contiguous to and adjoins Leawood; and

WHEREAS, all of the owners of said land have consented to its annexation into Leawood.

NOW, THEREFORE, BE IT ORDAINED BY THE GOVERNING BODY OF THE CITY OF LEAWOOD, KANSAS:

SECTION 1. That the land, consisting of the following legally described tracts, is hereby included, incorporated, annexed and brought within the corporate limits of the City of Leawood, Kansas, pursuant to K.S.A. 12-520(a)(7), to wit:

TRACT I

Section 10, Township 14 South, Range 25 East: A part of Lot 31, MASTIN GARDENS, a subdivision in the City of Overland Park, Johnson County, Kansas, (now vacated) and a part of the Northerly 50.0 feet of Right of way of the St. Louis San Francisco Railway Co., as same was formerly located and constructed over and across the Northwest Quarter (NW1/4) of the Northeast Quarter (NE1/4), said strip or parcel lying South (S)of and adjoining said Lot Thirty-One (31), described as follows: Beginning at a point on the North Line of said Lot Thirty-One (31), which is 156.30 feet East (E) of the Northwest (NW) Corner thereof; thence East (E) along the North line of said Lot Thirty-One (31), 90.0 feet; thence South (S), parallel with the West (W) line of said Lot 31, 204.91 feet to a point on the center line of said railway, thence West 90.61 feet; thence North, parallel with the West line of said Lot Thirty-One (31), 215.34 feet to the point of beginning.

And also

TRACT II

Section 10, Township 14 South, Range 25 East: A part of the Northwest Quarter of the Northeast Quarter of Section 10, Township 14, Range 25, in Overland Park, Johnson County, Kansas, described as follows: Beginning at the Northwest corner of Lot 31, MASTIN GARDENS, a subdivision (now vacated) thence East along the North line of said Lot 31 a distance of 156.30 feet; thence South, parallel with the West line of said Lot 31 a distance of 215.34 feet to the center line of said St. Louis, San Francisco Railway Co. Right of Way, now abandoned, thence Southwesterly along the center line of said railway 157.36 feet to its intersection with the prolongation South of the West

line of said Lot 31; thence North and along the West line of said Lot 31 a distance of 233.46 feet to the Point of beginning.

And also

TRACT III

All that part of the roadway lying in the NE1/4 of Section 10, Township 14, Range 25, now in the City of Overland Park, Johnson County, Kansas, lying adjacent to the West line of Lot 31, MASTIN GARDENS, a subdivision of land now vacated in the City of Overland Park, Johnson County, Kansas, which lies North of the centerline of the abandoned right-of-way of the St. Louis and San Francisco Railway Company, as formerly located.

And also

TRACT IV

All that part of 151st St. right of way lying in the NE 1/4 of Section 10, Township 14, Range 25, now in the City of Overland Park, Johnson County, Kansas, lying adjacent to the North line of the West 246.30 feet of Lot 31, Mastin Gardens, a subdivision of land now vacated in the City of Overland Park, Johnson County, Kansas, and also that part of said 151st St. right of way lying North of the roadway adjacent to the West line of said Lot 31.

SECTION 2. This ordinance shall take effect and be in force from and after 12:01 a.m. on June 20, 1996, and after its publication in *The Legal Record*, the official City newspaper.

SECTION 3. The City Clerk of Leawood shall certify a copy of this ordinance to the City Clerk of Overland Park, Kansas; the Johnson County Clerk; the Johnson County Election Commissioner; the Board of County Commissioners of Johnson County; the Register of Deeds of Johnson County, the latter of whom is requested to file it and to record it in the deed records of Johnson County at the expense of the Petitioners, and to write on the margin of such township or addition, if any, the words "cancelled by order" or "cancelled in part by order," as the case may be, giving reference thereon to the page and book of records where such order is recorded in the Office of the Register of Deeds of Johnson County; the Kansas Department of Revenue, Sales Tax Division; the Kansas Department of Transportation; the Kansas City Power and Light Company; the KPL Gas Service Company; the Southwestern Bell Telephone Company; and TCI of Overland Park, Inc.

PASSED by the City Council this 17th day of June, 1996.

APPROVED by the Mayor this 17th day of June, 1996.

(S E A L)

Marcia Rinehart, Mayor

ATTEST:

Martha Heizer
City Clerk

APPROVED AS TO FORM:

Richard S. Wetzler
City Attorney

ORD1594

Publication Fees: $80.35

The Legal Record
600 E. Santa Fe, Suite 4
Olathe, KS 66061-3700

CITY OF LEAWOOD
ATTN: MARTHA HEIZER
4800 TOWN CENTER DR
LEAWOOD, KS 66211

Proof of Publication

STATE OF KANSAS, JOHNSON COUNTY, SS;
Tammy Schwien, of lawful age, being first duly sworn, deposes and says that she is Legal Notices Administrator of The Legal Record which is a newspaper printed in the State of Kansas, published in and of general paid circulation on a weekly, monthly or yearly basis in Johnson County, Kansas, is not a trade, religious or fraternal publication, is published at least weekly fifty (50) times a year, has been so published continuously and uninterrupted in said County and State for a period of more than five (5) years prior to the first publication of the notice attached, and has been admitted at the post office as second class matter.
That a notice was published in all editions of the regular and entire issue for the following subject matter (also identified by the following case number, if any) for 1 consecutive week(s), as follows:

ORDINANCE NO. 1594--6/4/96

Tammy Schwien
Legal Notices Administrator

Subscribed and sworn to before me on this date:
June 19, 1996

Debra Dziadura
Notary Public

DEBRA DZIADURA
Notary Public - State of Kansas

My appointment expires: August 21, 1999.

$80.35

ORDINANCE NO. 1594

First published in The Legal Record, Tuesday, June 18, 1996.

ORDINANCE NO. 1594

AN ORDINANCE INCLUDING, ANNEXING AND INCORPORATING CERTAIN LAND LOCATED ON THE SOUTH SIDE OF 151ST STREET, EAST OF THE HALF SECTION LINE OF SECTION 10, TOWNSHIP 14 SOUTH, RANGE 25 EAST INTO THE BOUNDARIES OF THE CITY OF LEAWOOD, KANSAS.

WHEREAS, an Exclusion/Annexation Agreement dated May 20, 1996, (hereinafter the "Agreement") was entered by the City of Overland Park, Kansas (hereinafter "Overland Park") and the City of Leawood, Kansas (hereinafter "Leawood"); and

WHEREAS, said Agreement concerns the possible exclusion of land located on the south side of 151st Street, east of the half section line of Section 10, Township 14 South, Range 25 East, from the boundaries of Overland Park and the annexation of the same land into Leawood; and

WHEREAS, on May 22, 1996, Leawood filed with the City Clerk of Overland Park the original Petition to Overland Park to Exclude land from the City of Overland Park pursuant to K.S.A. 12-504 *et seq.* spoken of in paragraph 1 of said Agreement; and

WHEREAS, said Petition to Overland Park to Exclude was executed by all of the owners of land which is legally described in SECTION 1 of this ordinance, below; and

WHEREAS, on May 22, 1996, Leawood filed with the City Clerk of Overland Park a copy of the Consent to Annexation of said land by Leawood spoken of in paragraph 2 of said Agreement, the original of which Consent had been filed with the City Clerk of Leawood on May 22, 1996; and

WHEREAS, on May 21, 1996, Leawood delivered to the City Clerk of Overland Park the check in the amount of $125.97 spoken of in paragraph 3 of said Agreement; and

WHEREAS, on May 21, 1996, Leawood delivered to the City Clerk of Overland Park the check in the amount of $10.00 spoken of in paragraph 4 of said Agreement; and

WHEREAS, on May 21, 1996, Leawood delivered to the City Clerk of Overland Park the check in the amount of $677.00 spoken of in paragraph 5 of said Agreement; and

WHEREAS, on May 21, 1996, Leawood delivered to the City Clerk of Overland Park the check in the amount of $1,079.94 spoken of in paragraph 6 of the Agreement; and

WHEREAS, thereupon on May 24, 1996, the City Clerk of Overland Park caused to be published for the first time and on May 31, 1996, caused to be published for the second time in *The Overland Park Sun*, the Notice of Public Hearing spoken of in paragraph 7 of said Agreement giving the date, day, place and time of the public hearing on the proposed exclusion of land; and

WHEREAS, on June 10, 1996, at 7:30 p.m. in the Council Chambers, Overland Park City Hall, 8500 Santa Fe, the Governing Body of the City of Overland Park held a public hearing on the Petition to Exclude of the owners of the said land during which comments from all interested persons were heard; and

WHEREAS, no written objection to the proposed exclusion was filed with the City Clerk of Overland Park at or before the hearing held on June 10, 1996, by any owner of any tract proposed to be excluded, nor by any owner of any adjoining tract who would have been a proper party to the petition but who was not a party to it; and

WHEREAS, the Governing Body of Overland Park found and determined that proper notice of the public hearing on the proposed exclusion of land held on June 10, 1996, was given by publication in *The Overland Park Sun*; and

WHEREAS, the Governing Body of the Overland Park found and determined that no private rights would be injured or endangered by the exclusion of said land from the boundaries of Overland Park, that the public would suffer no loss or inconvenience thereby, and that justice required the granting of the Petition; and

WHEREAS, the Governing Body of Overland Park found and determined that it would be in the best interests of the City of Overland Park, the public, and the owners of said land to exclude the said land from Overland Park and for Leawood to annex it; and

WHEREAS, the Governing Body of Overland Park on June 10, 1996, passed Ordinance No. A-DE-1984, Section 1 of which excluded said land from the boundaries of Overland Park, and Section 4 of which made said ordinance effective and placed it in force from and after 12:01 a.m. on June 20, 1996, and after its publication; and

WHEREAS, said land is composed of four tracts, each of which is contiguous to and adjoins Leawood; and

WHEREAS, all of the owners of said land have consented to its annexation into Leawood.

NOW, THEREFORE, BE IT ORDAINED BY THE GOVERNING BODY OF THE CITY OF LEAWOOD, KANSAS:

SECTION 1. That the land, consisting of the following legally described tracts, is hereby included, incorporated, annexed and brought within the corporate limits of the City of Leawood, Kansas, pursuant to K.S.A. 12-520(a)(7), to wit:

TRACT I

Section 10, Township 14 South, Range 25 East: A part of Lot 31, MASTIN GARDENS, a subdivision in the City of Overland Park, Johnson County, Kansas, (now vacated) and a part of the Northerly 50.0 feet of Right of way of the St. Louis San Francisco Railway Co., as same was formerly located and constructed over and across the Northwest Quarter (NW1/4) of the Northeast Quarter (NE1/4), said strip or parcel lying South (S)of and adjoining said Lot Thirty-One (31), described as follows: Beginning at a point on the North Line of said Lot Thirty-One (31), which is 156.30 feet East (E) of the Northwest (NW) Corner thereof; thence East (E) along the North line of said Lot Thirty-One (31), 90.0 feet; thence South (S), parallel with the West (W) line of said Lot 31, 204.91 feet to a point on the center line of said railway, thence West 90.61 feet; thence North, parallel with the West line of said Lot Thirty-One (31), 215.34 feet to the point of beginning.

And also

TRACT II

Section 10, Township 14 South, Range 25 East: A part of the Northwest Quarter of the Northeast Quarter of Section 10, Township 14, Range 25, in Overland Park, Johnson County, Kansas, described as follows: Beginning at the Northwest corner of Lot 31, MASTIN GARDENS, a subdivision (now vacated) thence East along the North line of said Lot 31 a distance of 156.30 feet; thence South, parallel with the West line of said Lot 31 a distance of 215.34 feet to the center line of said St. Louis, San Francisco Railway Co. Right of Way, now abandoned, thence Southwesterly along the center line of said railway 157.36 feet to its intersection with the prolongation South of the West line of said Lot 31; thence North and along the West line of said Lot 31 a distance of 233.46 feet to the Point of beginning.

And also

TRACT III

All that part of the roadway lying in the NE1/4 of Section 10, Township 14, Range 25, now in the City of Overland Park, Johnson County, Kansas, lying adjacent to the West line of Lot 31, MASTIN GARDENS, a subdivision of land now vacated in the City of Overland Park, Johnson County, Kansas, which lies North of the centerline of the abandoned right-of-way of the St. Louis and San Francisco Railway Company, as formerly located.

And also

TRACT IV

All that part of 151st St. right of way lying in the NE 1/4 of Section 10, Township 14, Range 25, now in the City of Overland Park, Johnson County, Kansas, lying adjacent to the North line of the West 246.30 feet of Lot 31, Mastin Gardens, a subdivision of land now vacated in the City of Overland Park, Johnson County, Kansas, and also that part of said 151st St. right of way lying North of the roadway adjacent to the West line of said Lot 31.

SECTION 2. This ordinance shall take effect and be in force from and after 12:01 a.m. on June 20, 1996, and after its publication in *The Legal Record*, the official City newspaper.

SECTION 3. The City Clerk of Leawood shall certify a copy of this ordinance to the City Clerk of Overland Park, Kansas; the Johnson County Clerk; the Johnson County Election Commissioner; the Board of County Commissioners of Johnson County; the Register of Deeds of Johnson County, the latter of whom is requested to file it and to record it in the deed records of Johnson County at the expense of the Petitioners, and to write on the margin of such township or addition, if any, the words "cancelled by order" or "cancelled in part by order," as the case may be, giving reference thereon to the page and book of records where such order is recorded in the Office of the Register of Deeds of Johnson County; the Kansas Department of Revenue, Sales Tax Division; the Kansas Department of Transportation; the Kansas City Power and Light Company; the KPL Gas Service Company; the Southwestern Bell Telephone Company; and TCI of Overland Park, Inc.

PASSED by the City Council this 17th day of June, 1996.

APPROVED by the Mayor this 17th day of June, 1996.

(S E A L)

Marcia Rinehart, Mayor

ATTEST:

Martha Heizer
City Clerk

APPROVED AS TO FORM:

Richard S. Wetzler
City Attorney

ORDINANCE NO. 1593

AN ORDINANCE AUTHORIZING AND PROVIDING FOR THE ISSUANCE AND DELIVERY OF TEMPORARY NOTES, SERIES 160-95-37 (MUNICIPAL POOL COMPLEX IMPROVEMENTS), OF THE CITY OF LEAWOOD, KANSAS, IN THE PRINCIPAL AMOUNT OF $700,000 TO PROVIDE TEMPORARY FINANCING OF THE COST OF IMPROVEMENTS TO THE MUNICIPAL POOL COMPLEX IN THE CITY OF LEAWOOD.

WHEREAS, pursuant to K.S.A. 12-1736, et seq., as amended, and Ordinance No. 1527, the Governing Body of the City of Leawood, Kansas (the "City") has heretofore authorized the following described improvement project within the City, to wit: the reconstruction, remodeling, replacement and repair of the pool, bathhouse and related facilities at Leawood Park, 10601 Lee Boulevard, (the "Project") at an estimated cost of $1,196,516; and

WHEREAS, the Project has commenced and the City has heretofore issued its Temporary Notes, Project 160 (Municipal Pool Complex Improvements), dated October 10, 1995 in the principal amount of $200,000 (the "Prior Notes") to provide funds to pay the costs of the Project heretofore incurred by the City, said Prior Notes to become due and payable in the immediate future, and the City has incurred or expects to incur additional costs payable with the next nine months in the amount of $500,000; and

WHEREAS, the City is authorized by law and in particular K.S.A. 10-123, as amended, to issue temporary notes of the City to pay the costs of the Project as the same become due and payable.

NOW, THEREFORE, BE IT ORDAINED BY THE GOVERNING BODY OF THE CITY OF LEAWOOD, KANSAS, AS FOLLOWS:

Section One. Authorization of Notes. That in order to provide funds to redeem and pay the costs of the project now due or to become due in the immediate future, including necessary engineering, legal and incidental costs, there shall be issued and the City is hereby authorized to issue temporary notes of the City, designated City of Leawood, Kansas, Temporary Notes, Series 160-95-37 (Municipal Pool Complex Improvements), in the aggregate principal amount of Seven Hundred Thousand Dollars ($700,000) (the "Notes"). The amount of the Notes together with other temporary notes heretofore issued to finance the Project which remain outstanding does not exceed the total estimated costs of said Project.

Section Two. Terms of the Notes. Said issue of Notes shall consist of bearer notes numbered 1 through 7 inclusive, each in the denomination of $100,000. Each of said Notes shall be dated July 1, 1996, shall mature by their stated terms and become due and payable on March 20, 1997. The Notes shall bear

interest from their dated date, payable at maturity or upon redemption prior thereto as herein provided, at a rate of interest of 4.15% per annum (computed on the basis of actual days elapsed and a 360-day year composed of twelve 30-day months). The Notes shall be subject to redemption at the option of the City upon notice as hereinafter provided and shall be redeemed and cancelled contemporaneously with the issuance of general obligation improvement bonds of the City issued in lieu thereof to provide permanent financing of the Project.

Both principal of and interest on said Notes shall be payable in lawful money of the United States of America by check or draft at the office of the City Treasurer of the City upon presentation and surrender of said Notes.

The City reserves the right to redeem and pay said Notes, in whole or in part (and if in part in denominations of $100,000 selected by the City in its sole discretion), at any date prior to the stated maturity of said Notes by notice thereof given in writing by first class mail to the original purchaser of the Notes and to any known holder of the Notes or by the publication of such notice at least one time in a newspaper published or of general circulation in the metropolitan Kansas City area, and payment of said Notes, such publication of such notice or mailing of written notification of redemption to the original purchaser and the known holder to be at least twenty days prior to the redemption date fixed in such notice. Notice of such redemption having been given as aforesaid, interest shall cease to accrue on said Notes from and after the redemption date.

Section Three. Security for the Notes. The full faith, credit and resources of the City of Leawood, Kansas, shall be and the same are hereby irrevocably pledged for the prompt payment of the principal of and interest on the Notes.

The Governing Body of the City shall make provisions for the payment of said Notes by the issuance of renewal notes or general obligation bonds of the City to provide permanent financing of the Project upon the completion thereof. If said bonds shall not be so issued and the Notes shall not be so paid, the Governing Body shall levy and collect a tax upon all taxable tangible property within the territorial limits of the City in an amount sufficient to pay the principal of and interest on said Notes as the same become due and payable.

Section Four. Form of Notes. Each of said Notes shall be in customary form as provided by law, shall be signed by the Mayor and attested by the City Clerk of the City and shall have the seal of said City affixed thereto.

Section Five. Execution and Delivery. The Mayor and City Clerk of the City are hereby authorized and directed to prepare and execute the Notes herein authorized in the form and substance hereinbefore described and as provided by law and to procure the proper registration in the office of the City Clerk and in the

office of the Treasurer of the State of Kansas, and when so executed and registered, said Notes shall be countersigned by the City Clerk and delivered to United Missouri Bank, the original purchaser thereof, upon payment of the purchase price therefor which shall not be less than 99.538% of the principal amount thereof plus accrued interest to the date of delivery thereof to the original purchaser thereof.

Section Six. Disposition of Proceeds. The proceeds of the sale of said Notes shall be deposited with the City Treasurer to be used to redeem and retire Prior Notes; and

Section Seven. Tax Covenants. The City covenants and agrees that (1) it will comply with each and every provision of Section 103 and Sections 141 through 150 of the Internal Revenue Code of 1986, as amended (the "Code"), that is or may become applicable to the Notes, necessary to maintain the exclusion from gross income for federal income tax purposes of the interest on the Notes, including but not limited to any provisions requiring the rebate of earnings on amounts held in funds or accounts created with respect to the Notes and (2) it will not use or permit the use of any of the proceeds of the Notes or other funds of the City nor take or permit any other action, or fail to take any action, if any such action or failure to act would adversely affect the exclusion from gross income for federal income tax purposes of the interest on the Notes; provided, however, the foregoing provision in (1) above shall be and become null and void if and to the extent that the City shall receive an opinion from nationally recognized bond counsel which concludes that compliance with the foregoing covenant and the provisions of the Code as provided in this section shall not be required to maintain and continue the tax-exempt status of the interest income on the Notes.

Section Eight. Further Authority. The duly elected and appointed officers of the City, including the Mayor, the City Clerk and the Finance Director, are hereby further authorized and directed to execute all documents and take such actions as they may deem necessary or advisable in order to carry out and perform the purposes of this Ordinance and to make ministerial alterations, changes or additions in the foregoing agreements, statements, instruments and other documents herein approved, authorized and confirmed which they may approve, and the execution or taking of such action shall be conclusive evidence of such necessity or advisability.

Section Nine. Effective Date. That this Ordinance shall take effect and be in force after its publication as provided by law.

PASSED by the Council the 17th day of June, 1996.

APPROVED by the Mayor the 17th day of June, 1996.

(S E A L)

ATTEST:

Martha Heizer, City Clerk

APPROVED FOR FORM:

R. S. Wetzler, City Attorney

Marcia Rinehart, Mayor

WII-tnnmo160

ORD1593

Publication Fees: $83.09

The Legal Record
600 E. Santa Fe, Suite 4
Olathe, KS 66061-3700

CITY OF LEAWOOD
ATTN: MARTHA HEIZER
4800 TOWN CENTER DR
LEAWOOD, KS 66211

Proof of Publication

STATE OF KANSAS, JOHNSON COUNTY, SS;
Tammy Schwien, of lawful age, being first duly sworn, deposes and says that she is Legal Notices Administrator of The Legal Record which is a newspaper printed in the State of Kansas, published in and of general paid circulation on a weekly, monthly or yearly basis in Johnson County, Kansas, is not a trade, religious or fraternal publication, is published at least weekly fifty (50) times a year, has been so published continuously and uninterrupted in said County and State for a period of more than five (5) years prior to the first publication of the notice attached, and has been admitted at the post office as second class matter.
That a notice was published in all editions of the regular and entire issue for the following subject matter (also identified by

the following case number, if any) for _____ consecutive week(s), as follows:

ORDINANCE NO. 1593--6/18/96

Legal Notices Administrator

Subscribed and sworn to before me on this date:
June 19, 1996

Notary Public

DEBRA DZIADURA
Notary Public - State of Kansas

My appointment expires: August 21, 1999.

$83.09

ORDINANCE NO. 1586

First published in The Legal Record, Tuesday, June 18, 1996.

ORDINANCE NO. 1586

AN ORDINANCE AUTHORIZING AND PROVIDING FOR THE ISSUANCE AND DELIVERY OF TEMPORARY NOTES, PROJECT 124 (135TH STREET (K-150), STATE LINE-NALL AVENUE), OF THE CITY OF LEAWOOD, KANSAS, IN THE PRINCIPAL AMOUNT OF $2,900,000 TO PROVIDE TEMPORARY FINANCING OF THE COST OF CONSTRUCTION OF IMPROVEMENTS TO 135TH STREET (K-150), STATE LINE-NALL AVENUE, INCLUDING GRADING, REGRADING, CURBING, RECURBING, GUTTERING, REGUTTERING, PAVING, REPAVING, MACADAMIZING, REMACADAMIZING, CONSTRUCTING, RECONSTRUCTING, OPENING, WIDENING, EXTENDING, ROUNDING CORNERS, STRAIGHTENING, RELOCATING, CONSTRUCTION OR RECONSTRUCTION OF ANY NECESSARY BRIDGES, APPROACHES THERETO, VIADUCTS, OVERPASSES, UNDERPASSES, CULVERTS, STORM DRAINAGE, TRAFFICWAY ILLUMINATION, TRAFFIC CONTROL DEVICES, PEDESTRIAN WAYS, BICYCLE WAYS, OR OTHER IMPROVEMENTS OR ANY TWO OR MORE OF SUCH IMPROVEMENTS OR REIMPROVEMENTS AND OTHER INCIDENTAL CONSTRUCTION COSTS, IN THE CITY OF LEAWOOD.

WHEREAS, pursuant to K.S.A. 12-685, et seq., as amended, and Ordinance No. 1203, the Governing Body of the City of Leawood, Kansas (the "City") has heretofore authorized the following described improvement project within the City, to wit: the improvement and reimprovement of 135th Street (K-150) located within the City of Leawood (State Line-Nall Avenue) (the "Project") at an estimated cost of $4,959,851; and

WHEREAS, the Project has been commenced and the City has heretofore issued its Temporary Notes, Project 124 (135th Street (K-150), (State Line-Nall Avenue), dated October 10, 1995, in the principal amount of $1,400,000 and January 2, 1996 in the amount of $1,000,000 (the "Prior Notes") to provide funds to pay the costs of the Project heretofore incurred by the City, said Prior Notes to become due and payable in the immediate future, and the City has incurred or expects to incur additional costs payable with the next nine months in the amount of $500,000; and

WHEREAS, the City is authorized by law and in particular K.S.A. 10-123, as amended, to issue temporary notes of the City to pay the costs of the Project as the same become due and payable.

NOW, THEREFORE, BE IT ORDAINED BY THE GOVERNING BODY OF THE CITY OF LEAWOOD, KANSAS, AS FOLLOWS:

Section One. Authorization of Notes. That in order to provide funds to redeem and pay the costs of the project now due or to become due in the immediate future, including necessary engineering, legal and incidental costs, there shall be issued and the City is hereby authorized to issue temporary notes of the City, designated City of Leawood, Kansas, Temporary Notes, Project 124 (135th Street (K-150), State Line-Nall Avenue), in the aggregate principal amount of Two Million Nine Hundred Thousand Dollars ($2,900,000) (the "Notes"). The amount of the Notes together with other temporary notes heretofore issued to finance the Project which remain outstanding does not exceed the total estimated costs of said Project.

Section Two. Terms of the Notes. Said issue of Notes shall consist of bearer notes numbered 1 through 29 inclusive, each in the denomination of $100,000. Each of said Notes shall be dated July 1, 1996, shall mature by their stated terms and become due and payable on March 20, 1997. The Notes shall bear interest from their dated date, payable at maturity or upon redemption prior thereto as herein provided, at a rate of interest of 4.15% per annum (computed on the basis of actual days elapsed and a 360-day year composed of twelve 30-day months). The Notes shall be subject to redemption at the option of the City upon notice as hereinafter provided and shall be redeemed and cancelled contemporaneously with the issuance of general obligation improvement bonds of the City issued in lieu thereof to provide permanent financing of the Project.

Both principal of and interest on said Notes shall be payable in lawful money of the United States of America by check or draft at the office of the City Treasurer of the City upon presentation and surrender of said Notes.

The City reserves the right to redeem and pay said Notes, in whole or in part (and if in part in denominations of $100,000 selected by the City in its sole discretion), at any date prior to the stated maturity of said Notes by notice thereof given in writing by first class mail to the original purchaser of the Notes and to any known holder of the Notes or by the publication of such notice at least one time in a newspaper published or of general circulation in the metropolitan Kansas City area, and payment of said Notes, such publication of such notice or mailing of written notification of redemption to the original purchaser and the known holder to be at least twenty days prior to the redemption date fixed in such notice. Notice of such redemption having been given as aforesaid, interest shall cease to accrue on said Notes from and after the redemption date.

Section Three. Security for the Notes. The full faith, credit and resources of the City of Leawood, Kansas, shall be and the same are hereby irrevocably pledged for the prompt payment of the principal of and interest on the Notes.

The Governing Body of the City shall make provisions for the payment of said Notes by the issuance of renewal notes or general obligation bonds of the City to provide permanent financing of the Project upon the completion thereof. If said bonds shall not be so issued and the Notes shall not be so paid, the Governing Body shall levy and collect a tax upon all taxable tangible property within the territorial limits of the City in an amount sufficient to pay the principal of and interest on said Notes as the same become due and payable.

Section Four. Form of Notes. Each of said Notes shall be in customary form as provided by law, shall be signed by the Mayor and attested by the City Clerk of the City and shall have the seal of said City affixed thereto.

Section Five. Execution and Delivery. The Mayor and City Clerk of the City are hereby authorized and directed to prepare and execute the Notes herein authorized in the form and substance hereinbefore described and as provided by law and to procure the proper registration in the office of the City Clerk and in the office of the Treasurer of the State of Kansas, and when so executed and registered, said Notes shall be countersigned by the City Clerk and delivered to United Missouri Bank, the original purchaser thereof, upon payment of the purchase

CONTINUED ON PAGE 18

CONTINUED FROM PAGE 17

price therefor which shall not be less than 99.538% of the principal amount thereof plus accrued interest to the date of delivery thereof to the original purchaser thereof.

Section Six. Disposition of Proceeds. The proceeds of the sale of said Notes shall be deposited with the City Treasurer. The sum of $2,400,000 of the proceeds shall be used to redeem and retire the Prior Notes, and the balance of such proceeds shall be deposited in a special fund created for the purpose of paying costs and expenses of the Project.

Section Seven. Tax Covenants. The City covenants and agrees that (1) it will comply with each and every provision of Section 103 and Sections 141 through 150 of the Internal Revenue Code of 1986, as amended (the "Code"), that is or may become applicable to the Notes, necessary to maintain the exclusion from gross income for federal income tax purposes of the interest on the Notes, including but not limited to any provisions requiring the rebate of earnings on amounts held in funds or accounts created with respect to the Notes and (2) it will not use or permit the use of any of the proceeds of the Notes or other funds of the City nor take or permit any other action, or fail to take any action, if any such action or failure to act would adversely affect the exclusion from gross income for federal income tax purposes of the interest on the Notes; provided, however, the foregoing provision in (1) above shall be and become null and void if and to the extent that the City shall receive an opinion from nationally recognized bond counsel which concludes that compliance with the foregoing covenant and the provisions of the Code as provided in this section shall not be required to maintain and continue the tax-exempt status of the interest income on the Notes.

Section Eight. Further Authority. The duly elected and appointed officers of the City, including the Mayor, the City Clerk and the Finance Director, are hereby further authorized and directed to execute all documents and take such actions as they may deem necessary or advisable in order to carry out and perform the purposes of this Ordinance and to make ministerial alterations, changes or additions in the foregoing agreements, statements, instruments and other documents herein approved, authorized and confirmed which they may approve, and the execution or taking of such action shall be conclusive evidence of such necessity or advisability.

Section Nine. Effective Date. That this ordinance shall take effect and be in force after its publication as provided by law.

PASSED by the Council the 17 th day of June, 1996.

APPROVED by the Mayor the 17 th day of June, 1996.

(S E A L)

ATTEST:

Marcia Rinehart, Mayor

Martha Helzer, City Clerk

APPROVED FOR FORM:

R. S. Wetzler, City Attorney

WII-tnnmo124

ORDINANCE NO. 1592

AN ORDINANCE AUTHORIZING AND PROVIDING FOR THE ISSUANCE AND DELIVERY OF TEMPORARY NOTES, PROJECT 146 (TOWN CENTER PLAZA), OF THE CITY OF LEAWOOD, KANSAS, IN THE PRINCIPAL AMOUNT OF $1,000,000 TO PROVIDE TEMPORARY FINANCING OF THE COST OF CONSTRUCTION OF 117TH STREET FROM ITS INTERSECTION WITH TOWN CENTER DRIVE WEST TO NALL AVENUE, SIGNALIZATION OF THE INTERSECTIONS OF NALL AND 117TH STREET, 119TH STREET AND HAWTHORNE, TOWN CENTER DRIVE AND ROE AVENUE, TOWN CENTER DRIVE AND NALL AVENUE AND 119TH STREET AT ROSEWOOD, CERTAIN UTILITY MAIN IMPROVEMENTS, BURIAL OF OVERHEAD POWER LINES, THE WIDENING AND UTILITY RELOCATIONS OF NALL AVENUE, 119TH STREET, ROE, AND TOWN CENTER DRIVE FROM ROE TO 117TH STREET, THE WIDENING OF TOWN CENTER DRIVE FROM 117TH STREET TO NALL AVENUE, SIGNALIZATION OF THE INTERSECTION OF TOWN CENTER DRIVE AND 117TH STREET OR TOWN CENTER DRIVE AND LEAWOOD CITY HALL/LEAWOOD LIBRARY, AND THE OVERLAY OF 119TH STREET FROM ROE AVENUE TO NALL AVENUE AND ROE AVENUE FROM TOWN CENTER DRIVE TO 119TH STREET IN THE CITY OF LEAWOOD.

WHEREAS, pursuant to K.S.A. 12-6a01, et seq., as amended, and Resolution No. 1238, the Governing Body of the City of Leawood, Kansas (the "City") has heretofore authorized the following described improvement project within the City, to wit: construction of 117th Street from its intersection with Town Center Drive west to Nall Avenue; signalization of various intersections (as hereinbefore outlined); certain utility main improvements, burial of overhead power lines; widening and utility relocations of various streets (as hereinbefore outlined); and the overlay of 119th Street from Roe Avenue to Nall Avenue and Roe Avenue from Town Center Drive to 119th Street (the "Project") at an estimated cost of $4,100,000; and

WHEREAS, the Project has been commenced and the City has heretofore issued its Temporary Notes, Project 146 (Town Center Plaza), dated October 10, 1995, in the principal amount of $1,000,000 (the "Prior Notes") to provide funds to pay the costs of the Project heretofore incurred by the City, said Prior Notes to become due and payable in the immediate future; and

WHEREAS, the City is authorized by law and in particular K.S.A. 10-123, as amended, to issue temporary notes of the City to provide funds to redeem and pay the Prior Notes and to pay the costs of the Project as the same become due and payable.

NOW, THEREFORE, BE IT ORDAINED BY THE GOVERNING BODY OF THE CITY OF LEAWOOD, KANSAS, AS FOLLOWS:

Section One. Authorization of Notes. That in order to provide funds to re-

deem and pay the Prior Notes to become due in the immediate future, there shall be issued and the City is hereby authorized to issue temporary notes of the City, designated City of Leawood, Kansas, Temporary Notes, Project 146 (Town Center Plaza), in the aggregate principal amount of One Million Dollars ($1,000,000) (the "Notes"). The amount of the Notes together with other temporary notes heretofore issued to finance the Project which remain outstanding does not exceed the total estimated costs of said Project.

Section Two. Terms of the Notes. Said issue of Notes shall consist of bearer notes numbered 1 through 10 inclusive, each in the denomination of $100,000. Each of said Notes shall be dated July 1, 1996, shall mature by their stated terms and become due and payable on March 20, 1997. The Notes shall bear interest from their dated date, payable at maturity or upon redemption prior thereto as herein provided, at a rate of interest of 4.15% per annum (computed on the basis of actual days elapsed and a 360-day year composed of twelve 30-day months). The Notes shall be subject to redemption at the option of the City upon notice as hereinafter provided and shall be redeemed and cancelled contemporaneously with the issuance of general obligation improvement bonds of the City issued in lieu thereof to provide permanent financing of the Project.

Both principal of and interest on said Notes shall be payable in lawful money of the United States of America by check or draft at the office of the City Treasurer of the City upon presentation and surrender of said Notes.

The City reserves the right to redeem and pay said Notes, in whole or in part (and if in part in denominations of $100,000 selected by the City in its sole discretion), at any date prior to the stated maturity of said Notes by notice thereof given in writing by first class mail to the original purchaser of the Notes and to any known holder of the Notes or by the publication of such notice at least one time in a newspaper published or of general circulation in the metropolitan Kansas City area, and payment of said Notes, such publication of such notice or mailing of written notification of redemption to the original purchaser and the known holder to be at least twenty days prior to the redemption date fixed in such notice. Notice of such redemption having been given as aforesaid, interest shall cease to accrue on said Notes from and after the redemption date.

Section Three. Security for the Notes. The full faith, credit and resources of the City of Leawood, Kansas, shall be and the same are hereby irrevocably pledged for the prompt payment of the principal of and interest on the Notes.

The Governing Body of the City shall make provisions for the payment of said Notes by the issuance of renewal notes or general obligation bonds of the City to provide permanent financing of the Project upon the completion thereof. If said

bonds shall not be so issued and the Notes shall not be so paid, the Governing Body shall levy and collect special assessments on property benefitted by the Project, and to the extent said special assessments shall not be so collected, the Governing Body shall levy and collect a tax upon all taxable tangible property within the territorial limits of the City in an amount sufficient to pay the principal of and interest on said Notes as the same become due and payable.

Section Four. Form of Notes. Each of said Notes shall be in customary form as provided by law, shall be signed by the Mayor and attested by the City Clerk of the City and shall have the seal of said City affixed thereto.

Section Five. Execution and Delivery. The Mayor and City Clerk of the City are hereby authorized and directed to prepare and execute the Notes herein authorized in the form and substance hereinbefore described and as provided by law and to procure the proper registration in the office of the City Clerk and in the office of the Treasurer of the State of Kansas, and when so executed and registered, said Notes shall be countersigned by the City Clerk and delivered to United Missouri Bank, the original purchaser thereof, upon payment of the purchase price therefor which shall not be less than 99.538% of the principal amount thereof plus accrued interest to the date of delivery thereof to the original purchaser thereof.

Section Six. Disposition of Proceeds. The proceeds of the sale of the Notes shall be deposited with the City Treasurer to be used to redeem and retire the Prior Notes; and

Section Seven. Tax Covenants. The City covenants and agrees that (1) it will comply with each and every provision of Section 103 and Sections 141 through 150 of the Internal Revenue Code of 1986, as amended (the "Code"), that is or may become applicable to the Notes, necessary to maintain the exclusion from gross income for federal income tax purposes of the interest on the Notes, including but not limited to any provisions requiring the rebate of earnings on amounts held in funds or accounts created with respect to the Notes and (2) it will not use or permit the use of any of the proceeds of the Notes or other funds of the City nor take or permit any other action, or fail to take any action, if any such action or failure to act would adversely affect the exclusion from gross income for federal income tax purposes of the interest on the Notes; provided, however, the foregoing provision in (1) above shall be and become null and void if and to the extent that the City shall receive an opinion from nationally recognized bond counsel which concludes that compliance with the foregoing covenant and the provisions of the Code as provided in this section shall not be required to maintain and continue the tax-exempt status of the interest income on the Notes.

Section Eight. Further Authority. The duly elected and appointed officers of the City, including the Mayor, the City Clerk and the Finance Director, are hereby further authorized and directed to execute all documents and take such actions as they may deem necessary or advisable in order to carry out and perform the purposes of this Ordinance and to make ministerial alterations, changes or additions in the foregoing agreements, statements, instruments and other documents herein approved, authorized and confirmed which they may approve, and the execution or taking of such action shall be conclusive evidence of such necessity or advisability.

Section Nine. Effective Date. That this Ordinance shall take effect and be in force after its publication as provided by law.

PASSED by the Council the 17 th day of June, 1996.

APPROVED by the Mayor the 17 th day of June, 1996.

(S E A L)

Marcia Rinehart

Marcia Rinehart, Mayor

ATTEST:

Martha Heizer

Martha Heizer, City Clerk

APPROVED FOR FORM:

R. S. Wetzler, City Attorney

WII-tnnmr146

ORD1592

Publication Fees: $90.54

The Legal Record
600 E. Santa Fe, Suite 4
Olathe, KS 66061-3700

CITY OF LEAWOOD
ATTN: MARTHA HEIZER
4800 TOWN CENTER DR
LEAWOOD, KS 66211

Proof of Publication

STATE OF KANSAS, JOHNSON COUNTY, SS;
Tammy Schwien, of lawful age, being first duly sworn, deposes and says that she is Legal Notices Administrator of The Legal Record which is a newspaper printed in the State of Kansas, published in and of general paid circulation on a weekly, monthly or yearly basis in Johnson County, Kansas, is not a trade, religious or fraternal publication, is published at least weekly fifty (50) times a year, has been so published continuously and uninterrupted in said County and State for a period of more than five (5) years prior to the first publication of the notice attached, and has been admitted at the post office as second class matter.
That a notice was published in all editions of the regular and entire issue for the following subject matter (also identified by the following case number, if any) for 1 consecutive week(s), as follows:

ORDINANCE NO. 1592--6/4/96

Tammy Schwien
Legal Notices Administrator

Subscribed and sworn to before me on this date:
June 19, 1996

Debra Dziadura
Notary Public

DEBRA DZIADURA
Notary Public - State of Kansas

My appointment expires: August 21, 1999.

$90.54

ORDINANCE NO. 1592

First published in The Legal Record, Tuesday, June 18, 1996

ORDINANCE NO. 1592

AN ORDINANCE AUTHORIZING AND PROVIDING FOR THE ISSUANCE AND DELIVERY OF TEMPORARY NOTES, PROJECT 146 (TOWN CENTER PLAZA), OF THE CITY OF LEAWOOD, KANSAS, IN THE PRINCIPAL AMOUNT OF $1,000,000 TO PROVIDE TEMPORARY FINANCING OF THE COST OF CONSTRUCTION OF 117TH STREET FROM ITS INTERSECTION WITH TOWN CENTER DRIVE WEST TO NALL AVENUE, SIGNALIZATION OF THE INTERSECTIONS OF NALL AND 117TH STREET, 119TH STREET AND HAWTHORNE, TOWN CENTER DRIVE AND ROE AVENUE, TOWN CENTER DRIVE AND NALL AVENUE AND 119TH STREET AT ROSEWOOD, CERTAIN UTILITY MAIN IMPROVEMENTS, BURIAL OF OVERHEAD POWER LINES, THE WIDENING AND UTILITY RELOCATIONS OF NALL AVENUE, 119TH STREET, ROE, AND TOWN CENTER DRIVE FROM ROE TO 117TH STREET, THE WIDENING OF TOWN CENTER DRIVE FROM 117TH STREET TO NALL AVENUE, SIGNALIZATION OF THE INTERSECTION OF TOWN CENTER DRIVE AND 117TH STREET OR TOWN CENTER DRIVE AND LEAWOOD CITY HALL/LEAWOOD LIBRARY, AND THE OVERLAY OF 119TH STREET FROM ROE AVENUE TO NALL AVENUE AND ROE AVENUE FROM TOWN CENTER DRIVE TO 119TH STREET IN THE CITY OF LEAWOOD.

WHEREAS, pursuant to K.S.A. 12-6a01, et seq., as amended, and Resolution No. 1238, the Governing Body of the City of Leawood, Kansas (the "City") has heretofore authorized the following described improvement project within the City, to wit: construction of 117th Street from its intersection with Town Center Drive west to Nall Avenue; signalization of various intersections (as hereinbefore outlined); certain utility main improvements, burial of overhead power lines; widening and utility relocations of various streets (as hereinbefore outlined); and the overlay of 119th Street from Roe Avenue to Nall Avenue and Roe Avenue from Town Center Drive to 119th Street (the "Project") at an estimated cost of $4,100,000; and

WHEREAS, the Project has been commenced and the City has heretofore issued its Temporary Notes, Project 146 (Town Center Plaza), dated October 10, 1995, in the principal amount of $1,000,000 (the "Prior Notes") to provide funds to pay the costs of the Project heretofore incurred by the City, said Prior Notes to become due and payable in the immediate future; and

WHEREAS, the City is authorized by law and in particular K.S.A. 10-123, as amended, to issue temporary notes of the City to provide funds to redeem and pay the Prior Notes and to pay the costs of the Project as the same become due and payable.

NOW, THEREFORE, BE IT ORDAINED BY THE GOVERNING BODY OF THE CITY OF LEAWOOD, KANSAS, AS FOLLOWS:

Section One. Authorization of Notes. That in order to provide funds to redeem and pay the Prior Notes to become due in the immediate future, there shall be issued and the City is hereby authorized to issue temporary notes of the City, designated City of Leawood, Kansas, Temporary Notes, Project 146 (Town Center Plaza), in the aggregate principal amount of One Million Dollars ($1,000,000) (the "Notes"). The amount of the Notes together with other temporary notes heretofore issued to finance the Project which remain outstanding does not exceed the total estimated costs of said Project.

Section Two. Terms of the Notes. Said issue of Notes shall consist of bearer notes numbered 1 through 10 inclusive, each in the denomination of $1,000,000. Each of said Notes shall be dated July 1, 1996, shall mature by their stated terms and become due and payable on March 20, 1997. The Notes shall bear interest from their dated date, payable at maturity or upon redemption prior thereto as herein provided, at a rate of interest of 4.15% per annum (computed on the basis of actual days elapsed and a 360-day year composed of twelve 30-day months). The Notes shall be subject to redemption at the option of the City upon notice as hereinafter provided and shall be redeemed and cancelled contemporaneously with the issuance of general obligation improvement bonds of the City issued in lieu thereof to provide permanent financing of the Project.

Both principal of and interest on said Notes shall be payable in lawful money

CONTINUED ON PAGE 20

CONTINUED FROM PAGE 19

of the United States of America by check or draft at the office of the City Treasurer of the City upon presentation and surrender of said Notes.

The City reserves the right to redeem and pay said Notes, in whole or in part (and if in part in denominations of $100,000 selected by the City in its sole discretion), at any date prior to the stated maturity of said Notes by notice thereof given in writing by first class mail to the original purchaser of the Notes and to any known holder of the Notes or by the publication of such notice at least one time in a newspaper published or of general circulation in the metropolitan Kansas City area, and payment of said Notes, such publication of such notice or mailing of written notification of redemption to the original purchaser and the known holder to be at least twenty days prior to the redemption date fixed in such notice. Notice of such redemption having been given as aforesaid, interest shall cease to accrue on said Notes from and after the redemption date.

Section Three. Security for the Notes. The full faith, credit and resources of the City of Leawood, Kansas, shall be and the same are hereby irrevocably pledged for the prompt payment of the principal of and interest on the Notes.

The Governing Body of the City shall make provisions for the payment of said Notes by the issuance of renewal notes or general obligation bonds of the City to provide permanent financing of the Project upon the completion thereof. If said bonds shall not be so issued and the Notes shall not be so paid, the Governing Body shall levy and collect special assessments on property benefitted by the Project, and to the extent said special assessments shall not be so collected, the Governing Body shall levy and collect a tax upon all taxable tangible property within the territorial limits of the City in an amount sufficient to pay the principal of and interest on said Notes as the same become due and payable.

Section Four. Form of Notes. Each of said Notes shall be in customary form as provided by law, shall be signed by the Mayor and attested by the City Clerk of the City and shall have the seal of said City affixed thereto.

Section Five. Execution and Delivery. The Mayor and City Clerk of the City are hereby authorized and directed to prepare and execute the Notes herein authorized in the form and substance hereinbefore described and as provided by law and to procure the proper registration in the office of the City Clerk and in the office of the Treasurer of the State of Kansas, and when so executed and registered, said Notes shall be countersigned by the City Clerk and delivered to United Missouri Bank, the original purchaser thereof, upon payment of the purchase price therefor which shall not be less than 99.538% of the principal amount thereof plus accrued interest to the date of delivery thereof to the original purchaser thereof.

Section Six. Disposition of Proceeds. The proceeds of the sale of the Notes shall be deposited with the City Treasurer to be used to redeem and retire the Prior Notes; and

Section Seven. Tax Covenants. The City covenants and agrees that (1) it will comply with each and every provision of Section 103 and Sections 141 through 150 of the Internal Revenue Code of 1986, as amended (the "Code"), that is or may become applicable to the Notes, necessary to maintain the exclusion from gross income for federal income tax purposes of the interest on the Notes, including but not limited to any provisions requiring the rebate of earnings on amounts held in funds or accounts created with respect to the Notes and (2) it will not use or permit the use of any of the proceeds of the Notes or other funds of the City nor take or permit any other action, or fail to take any action, if any such action or failure to act would adversely affect the exclusion from gross income for federal income tax purposes of the interest on the Notes; provided, however, the foregoing provision in (1) above shall be and become null and void if and to the extent that the City shall receive an opinion from nationally recognized bond counsel which concludes that compliance with the foregoing covenant and the provisions of the Code as provided in this section shall not be required to maintain and continue the tax-exempt status of the interest income on the Notes.

Section Eight. Further Authority. The duly elected and appointed officers of the City, including the Mayor, the City Clerk and the Finance Director, are hereby further authorized and directed to execute all documents and take such actions as they may deem necessary or advisable in order to carry out and perform the purposes of this Ordinance and to make ministerial alterations, changes or additions in the foregoing agreements, statements, instruments and other documents herein approved, authorized and confirmed which they may approve, and the execution or taking of such action shall be conclusive evidence of such necessity or advisability.

Section Nine. Effective Date. That this Ordinance shall take effect and be in force after its publication as provided by law.

PASSED by the Council the 17 th day of June, 1996.

APPROVED by the Mayor the 17 th day of June, 1996.

(S E A L)

Marcia Rinehart, Mayor

ATTEST:

Martha Heizer, City Clerk

APPROVED FOR FORM:

R. S. Wetzler, City Attorney

WII-tnnmr146

ORDINANCE NO. 1591

AN ORDINANCE AUTHORIZING AND PROVIDING FOR THE ISSUANCE AND DELIVERY OF TEMPORARY NOTES, PROJECT 144 (MISSION ROAD, 103RD - I-435), OF THE CITY OF LEAWOOD, KANSAS, IN THE AMOUNT OF $200,000 TO PROVIDE TEMPORARY FINANCING OF THE COST OF IMPROVEMENT OR REIMPROVEMENT OF MISSION ROAD, 103RD - I-435, INCLUDING GRADING, REGRADING, CURBING, RECURBING, GUTTERING, REGUTTERING, PAVING, REPAVING, MACADAMIZING, REMACADAMIZING, CONSTRUCTING, RECONSTRUCTING, OPENING, WIDENING, EXTENDING, ROUNDING CORNERS, STRAIGHTENING, RELOCATING, CONSTRUCTION OR RECONSTRUCTION OF ANY NECESSARY BRIDGES AND APPROACHES THERETO, VIADUCTS, OVERPASSES, UNDERPASSES, CULVERTS, STORM DRAINAGE, TRAFFICWAY ILLUMINATION, TRAFFIC CONTROL DEVICES, PEDESTRIAN WAYS, BICYCLE WAYS OR OTHER IMPROVEMENTS AND OTHER INCIDENTAL CONSTRUCTION COSTS, IN THE CITY OF LEAWOOD.

WHEREAS, pursuant to K.S.A. 12-685, et seq., as amended, and Ordinance No. 1204, the Governing Body of the City of Leawood, Kansas (the "City") has heretofore authorized the following described improvement project within the City, to wit: improvement of certain sections of Mission Road from 103rd Street to I-435 within the City of Leawood (the "Project") at an estimated cost of $2,000,000; and

WHEREAS, the Project has commenced and the City has incurred or expects to incur additional costs payable within the next nine months in the amount of $200,000; and

WHEREAS, the City is authorized by law and in particular K.S.A. 10-123, as amended, to issue temporary notes of the City to provide funds to redeem and pay the Prior Notes as the same become due and payable.

NOW, THEREFORE, BE IT ORDAINED BY THE GOVERNING BODY OF THE CITY OF LEAWOOD, KANSAS, AS FOLLOWS:

Section One. Authorization of Notes. That in order to provide funds to pay the costs of the project now due or to become due in the immediate future, including necessary engineering, legal and incidental costs, there shall be issued and the City is hereby authorized to issue temporary notes of the City, designated City of Leawood, Kansas, Temporary Notes, Project 144 (Mission Road, 103rd - I-435), in the aggregate principal amount of Two Hundred Thousand Dollars ($200,000) (the "Notes"). The amount of the Notes together with other temporary notes heretofore issued to finance the Project which remain outstanding does not exceed the total estimated costs of said Project.

Section Two. Terms of the Notes. Said issue of Notes shall consist of bearer notes numbered 1 through 2 inclusive, each in the denomination of $100,000. Each of said Notes shall be dated July 1, 1996, shall mature by their stated terms and become due and payable on March 20, 1997. The Notes shall bear interest from their dated date, payable at maturity or upon redemption prior thereto as herein

provided, at a rate of interest of 4.20% per annum (computed on the basis of actual days elapsed and a 360-day year composed of twelve 30-day months). The Notes shall be subject to redemption at the option of the City upon notice as hereinafter provided and shall be redeemed and cancelled contemporaneously with the issuance of general obligation improvement bonds of the City issued in lieu thereof to provide permanent financing of the Project.

Both principal of and interest on said Notes shall be payable in lawful money of the United States of America by check or draft at the office of the City Treasurer of the City upon presentation and surrender of said Notes.

The City reserves the right to redeem and pay said Notes, in whole or in part (and if in part in denominations of $100,000 selected by the City in its sole discretion), at any date prior to the stated maturity of said Notes by notice thereof given in writing by first class mail to the original purchaser of the Notes and to any known holder of the Notes or by the publication of such notice at least one time in a newspaper published or of general circulation in the metropolitan Kansas City area, and payment of said Notes, such publication of such notice or mailing of written notification of redemption to the original purchaser and the known holder to be at least twenty days prior to the redemption date fixed in such notice. Notice of such redemption having been given as aforesaid, interest shall cease to accrue on said Notes from and after the redemption date.

Section Three. Security for the Notes. The full faith, credit and resources of the City of Leawood, Kansas, shall be and the same are hereby irrevocably pledged for the prompt payment of the principal of and interest on the Notes.

The Governing Body of the City shall make provisions for the payment of said Notes by the issuance of renewal notes or general obligation bonds of the City to provide permanent financing of the Project upon the completion thereof. If said bonds shall not be so issued and the Notes shall not be so paid, the Governing Body shall levy and collect a tax upon all taxable tangible property within the territorial limits of the City in an amount sufficient to pay the principal of and interest on said Notes as the same become due and payable.

Section Four. Form of Notes. Each of said Notes shall be in customary form as provided by law, shall be signed by the Mayor and attested by the City Clerk of the City and shall have the seal of said City affixed thereto.

Section Five. Execution and Delivery. The Mayor and City Clerk of the City are hereby authorized and directed to prepare and execute the Notes herein authorized in the form and substance hereinbefore described and as provided by law and to procure the proper registration in the office of the City Clerk and in the office of the Treasurer of the State of Kansas, and when so executed and registered, said Notes shall be countersigned by the City Clerk and delivered to Country Club Bank, the original purchaser thereof, upon payment of the purchase price therefor which shall not be less than 99.68% of the principal amount thereof plus accrued interest to the date of delivery thereof to the original purchaser thereof.

Section Six. Disposition of Proceeds. The proceeds of the sale of the Notes shall be deposited with the City Treasurer in a special fund created for the purpose of paying the costs and expenses of the Project.

Section Seven. Tax Covenants. The City covenants and agrees that (1) it will comply with each and every provision of Section 103 and Sections 141 through 150 of the Internal Revenue Code of 1986, as amended (the "Code"), that is or may become applicable to the Notes, necessary to maintain the exclusion from gross income for federal income tax purposes of the interest on the Notes, including but not limited to any provisions requiring the rebate of earnings on amounts held in funds or accounts created with respect to the Notes and (2) it will not use or permit the use of any of the proceeds of the Notes or other funds of the City nor take or permit any other action, or fail to take any action, if any such action or failure to act would adversely affect the exclusion from gross income for federal income tax purposes of the interest on the Notes; provided, however, the foregoing provision in (1) above shall be and become null and void if and to the extent that the City shall receive an opinion from nationally recognized bond counsel which concludes that compliance with the foregoing covenant and the provisions of the Code as provided in this section shall not be required to maintain and continue the tax-exempt status of the interest income on the Notes.

Section Eight. Further Authority. The duly elected and appointed officers of the City, including the Mayor, the City Clerk and the Finance Director, are hereby further authorized and directed to execute all documents and take such actions as they may deem necessary or advisable in order to carry out and perform the purposes of this Ordinance and to make ministerial alterations, changes or additions in the foregoing agreements, statements, instruments and other documents herein approved, authorized and confirmed which they may approve, and the execution or taking of such action shall be conclusive evidence of such necessity or advisability.

Section Nine. Effective Date. That this Ordinance shall take effect and be in force after its publication as provided by law.

PASSED by the Council the 17 th day of June, 1996.

APPROVED by the Mayor the 17 th day of June, 1996.

(S E A L)

Marcia Rinehart

Marcia Rinehart, Mayor

ATTEST:

Martha Heizer

Martha Heizer, City Clerk

APPROVED FOR FORM:

R. S. Wetzler, City Attorney

WII:tnr144

The Legal Record
600 E. Santa Fe, Suite 4
Olathe, KS 66061-3700

ORD1591

Publication Fees: $73.27

CITY OF LEAWOOD
ATTN: MARTHA HEIZER
4800 TOWN CENTER DR
LEAWOOD, KS 66211

Proof of Publication

STATE OF KANSAS, JOHNSON COUNTY, SS;
Tammy Schwien, of lawful age, being first duly sworn, deposes and says that she is Legal Notices Administrator of The Legal Record which is a newspaper printed in the State of Kansas, published in and of general paid circulation on a weekly, monthly or yearly basis in Johnson County, Kansas, is not a trade, religious or fraternal publication, is published at least weekly fifty (50) times a year, has been so published continuously and uninterrupted in said County and State for a period of more than five (5) years prior to the first publication of the notice attached, and has been admitted at the post office as second class matter.
That a notice was published in all editions of the regular and entire issue for the following subject matter (also identified by the following case number, if any) for 1 consecutive week(s), as follows:

ORDINANCE NO. 1591--6/18/96

Tammy Schwien
Legal Notices Administrator

Subscribed and sworn to before me on this date:
June 19, 1996

Debra Dziadura
Notary Public

DEBRA DZIADURA
Notary Public - State of Kansas

My appointment expires: August 21, 1999.

$73.27

ORDINANCE NO. 1591

First published in The Legal Record, Tuesday, June 18, 1996.

ORDINANCE NO. 1591

AN ORDINANCE AUTHORIZING AND PROVIDING FOR THE ISSUANCE AND DELIVERY OF TEMPORARY NOTES, PROJECT 144 (MISSION ROAD, 103RD - I-435), OF THE CITY OF LEAWOOD, KANSAS, IN THE AMOUNT OF $200,000 TO PROVIDE TEMPORARY FINANCING OF THE COST OF IMPROVEMENT OR REIMPROVEMENT OF MISSION ROAD, 103RD - I-435, INCLUDING GRADING, REGRADING, CURBING, RECURBING, GUTTERING, REGUTTERING, PAVING, REPAVING, MACADAMIZING, REMACADAMIZING CONSTRUCTING, RECONSTRUCTING, OPENING, WIDENING, EXTENDING, ROUNDING CORNERS, STRAIGHTENING, RELOCATING, CONSTRUCTION OR RECONSTRUCTION OF ANY NECESSARY BRIDGES AND APPROACHES THERETO, VIADUCTS, OVERPASSES, UNDERPASSES, CULVERTS, STORM DRAINAGE, TRAFFICWAY ILLUMINATION, TRAFFIC CONTROL DEVICES, PEDESTRIAN WAYS, BICYCLE WAYS OR OTHER IMPROVEMENTS AND OTHER INCIDENTAL CONSTRUCTION COSTS, IN THE CITY OF LEAWOOD.

WHEREAS, pursuant to K.S.A. 12-685, et seq., as amended, and Ordinance No. 1204, the Governing Body of the City of Leawood, Kansas (the "City") has heretofore authorized the following described improvement project within the City, to wit: improvement of certain sections of Mission Road from 103rd Street to I-435 within the City of Leawood (the "Project") at an estimated cost of $2,000,000; and

WHEREAS, the Project has commenced and the City has incurred or expects to incur additional costs payable within the next nine months in the amount of $200,000; and

WHEREAS, the City is authorized by law and in particular K.S.A. 10-123, as amended, to issue temporary notes of the City to provide funds to redeem and pay the Prior Notes as the same become due and payable.

NOW, THEREFORE, BE IT ORDAINED BY THE GOVERNING BODY OF THE CITY OF LEAWOOD, KANSAS, AS FOLLOWS:

Section One. Authorization of Notes. That in order to provide funds to pay the costs of the project now due or to become due in the immediate future, including necessary engineering, legal and incidental costs, there shall be issued and the City is hereby authorized to issue temporary notes of the City, designated City of Leawood, Kansas, Temporary Notes, Project 144 (Mission Road, 103rd - I-435), in the aggregate principal amount of Two Hundred Thousand Dollars ($200,000) (the "Notes"). The amount of the Notes together with other temporary notes heretofore issued to finance the Project which remain outstanding does not exceed the total estimated costs of said Project.

Section Two. Terms of the Notes. Said issue of Notes shall consist of bearer notes numbered 1 through 2 inclusive, each in the denomination of $100,000. Each of said Notes shall be dated July 1, 1996, shall mature by their stated terms and become due and payable on March 20, 1997. The Notes shall bear interest from their dated date, payable at maturity or upon redemption prior thereto as herein provided, at a rate of interest of 4.20% per annum (computed on the basis of actual days elapsed and a 360-day year composed of twelve 30-day months). The Notes shall be subject to redemption at the option of the City upon notice as hereinafter provided and shall be redeemed and cancelled contemporaneously with the issuance of general obligation improvement bonds of the City issued in lieu thereof to provide permanent financing of the Project.

Both principal of and interest on said Notes shall be payable in lawful money of the United States of America by check or draft at the office of the City Treasurer of the City upon presentation and surrender of said Notes.

The City reserves the right to redeem and pay said Notes, in whole or in part (and if in part in denominations of $100,000 selected by the City in its sole discretion), at any date prior to the stated maturity of said Notes by notice thereof given in writing by first class mail to the original purchaser of the Notes and to any known holder of the Notes or by the publication of such notice at least one time in a newspaper published or of general circulation in the metropolitan Kansas City area, and payment of said Notes, such publication of such notice or mailing of written notification of redemption to the original purchaser and the known holder to be at least twenty days prior to the redemption date fixed in such notice. Notice of such redemption having been given as aforesaid, interest shall cease to accrue on said Notes from and after the redemption date.

Section Three. Security for the Notes. The full faith, credit and resources of the City of Leawood, Kansas, shall be and the same are hereby irrevocably pledged for the prompt payment of the principal of and interest on the Notes.

The Governing Body of the City shall make provisions for the payment of said Notes by the issuance of renewal notes or general obligation bonds of the City to provide permanent financing of the Project upon the completion thereof. If said bonds shall not be so issued and the Notes shall not be so paid, the Governing Body shall levy and collect a tax upon all taxable tangible property within the territorial limits of the City in an amount sufficient to pay the principal of and interest on said Notes as the same become due and payable.

Section Four. Form of Notes. Each of said Notes shall be in customary form as provided by law, shall be signed by the Mayor and attested by the City Clerk of the City and shall have the seal of said City affixed thereto.

Section Five. Execution and Delivery. The Mayor and City Clerk of the City are hereby authorized and directed to prepare and execute the Notes herein authorized in the form and substance hereinbefore described and as provided by law and to procure the proper registration in the office of the City Clerk and in the office of the Treasurer of the State of Kansas, and when so executed and registered, said Notes shall be countersigned by the City Clerk and delivered to Country Club Bank, the original purchaser thereof, upon payment of the purchase price therefor which shall not be less than 99.68% of the principal amount thereof plus accrued interest to the date of delivery thereof to the original purchaser thereof.

Section Six. Disposition of Proceeds. The proceeds of the sale of the Notes shall be deposited with the City Treasurer in a special fund created for the purpose of paying the costs and expenses of the Project.

Section Seven. Tax Covenants. The City covenants and agrees that (1) it will comply with each and every provision of Section 103 and Sections 141 through 150 of the Internal Revenue Code of 1986, as amended (the "Code"), that is or may become applicable to the Notes, necessary to maintain the exclusion from gross income for federal income tax purposes of the interest on the Notes, including but not limited to any provisions requiring the rebate of earnings on amounts held in funds or accounts created with respect to the Notes and (2) it will not use or permit the use of any of the proceeds of the Notes or other funds of the City nor take or permit any other action, or fail to take any action, if any such action or failure to act would adversely affect the exclusion from gross income for federal income tax purposes of the interest on the Notes; provided, however, the foregoing provision in (1) above shall be and become null and void if and to the extent that the City shall receive an opinion from nationally recognized bond counsel which concludes that compliance with the foregoing covenant and the provisions of the Code as provided in this section shall not be required to maintain and continue the tax-exempt status of the interest income on the Notes.

Section Eight. Further Authority. The duly elected and appointed officers of the City, including the Mayor, the City Clerk and the Finance Director, are hereby further authorized and directed to execute all documents and take such actions as they may deem necessary or advisable in order to carry out and perform the purposes of this Ordinance and to make ministerial alterations, changes or additions in the foregoing agreements, statements, instruments and other documents herein approved, authorized and confirmed which they may approve, and the execution or taking of such action shall be conclusive evidence of such necessity or advisability.

Section Nine. Effective Date. That this Ordinance shall take effect and be in force after its publication as provided by law.

PASSED by the Council the 17 th day of June, 1996.

APPROVED by the Mayor the 17 th day of June, 1996.

(S E A L)

Marcia Rinehart

Marcia Rinehart, Mayor

ATTEST:

Martha Heizer

Martha Heizer, City Clerk

APPROVED FOR FORM:

R. E. Wetzler, City Attorney

WH:mr144

ORDINANCE NO. 1590

AN ORDINANCE AUTHORIZING AND PROVIDING FOR THE ISSUANCE AND DELIVERY OF TEMPORARY NOTES, PROJECT 140 (83RD STREET), OF THE CITY OF LEAWOOD, KANSAS, IN THE PRINCIPAL AMOUNT OF $700,000 TO PROVIDE TEMPORARY FINANCING OF THE COST OF IMPROVEMENT OR REIMPROVEMENT OF 83RD STREET, INCLUDING GRADING, REGRADING, CURBING, RECURBING, GUTTERING, REGUTTERING, PAVING, REPAVING, MACADAMIZING, REMACADAMIZING, CONSTRUCTING, RECONSTRUCTING, OPENING, WIDENING, EXTENDING, ROUNDING CORNERS, STRAIGHTENING, RELOCATING, CONSTRUCTION OR RECONSTRUCTION OF ANY NECESSARY BRIDGES AND APPROACHES THERETO, VIADUCTS, OVERPASSES, UNDERPASSES, CULVERTS, STORM DRAINAGE, TRAFFICWAY ILLUMINATION, TRAFFIC CONTROL DEVICES, PEDESTRIAN WAYS, BICYCLE WAYS OR OTHER IMPROVEMENTS AND OTHER INCIDENTAL CONSTRUCTION COSTS, IN THE CITY OF LEAWOOD.

WHEREAS, pursuant to K.S.A. 12-685, et seq., as amended, and Ordinance No. 1424, the Governing Body of the City of Leawood, Kansas (the "City") has heretofore authorized the following described improvement project within the City, to wit: improvement of 83rd Street beginning at a point on the Kansas/Missouri state line which is the centerline of 83rd Street and 111.18 feet east of the centerline of State Line Road; thence west along the centerline of 83rd Street to a point on the west corporate city limit, said point being approximately 650.10 feet west of the centerline of Wenonga Road (south), within the City of Leawood (the "Project") at an estimated cost of $3,095,816.00; and

WHEREAS, the Project has been commenced and the City has heretofore issued its Temporary Notes, Project 140 (83rd Street), dated October 10, 1995 in the principal amount of $500,000 and January 2, 1996, in the principal amount of $500,000 (the "Prior Notes") to provide funds to pay the costs of the Project heretofore incurred by the City, said Prior Notes to become due and payable in the immediate future; and;

WHEREAS, the City is authorized by law and in particular K.S.A. 10-123, as amended, to issue temporary notes of the City to provide funds to redeem and pay the Prior Notes and to pay the costs of the Project as the same become due and payable.

NOW, THEREFORE, BE IT ORDAINED BY THE GOVERNING BODY OF THE CITY OF LEAWOOD, KANSAS, AS FOLLOWS:

Section One. Authorization of Notes. That in order to provide funds to redeem and pay the Prior Notes to become due in the immediate future, there shall be issued and the City is hereby authorized to issue temporary notes of the City, designated City of Leawood, Kansas, Temporary Notes, Project 140 (83rd Street), in

the aggregate principal amount of Seven Hundred Thousand Dollars ($700,000) (the "Notes"). The amount of the Notes together with other temporary notes heretofore issued to finance the Project which remain outstanding does not exceed the total estimated costs of said Project.

Section Two. Terms of the Notes. Said issue of Notes shall consist of bearer notes numbered 1 through 7 inclusive, each in the denomination of $100,000. Each of said Notes shall be dated July 1, 1996, shall mature by their stated terms and become due and payable on March 20, 1997. The Notes shall bear interest from their dated date, payable at maturity or upon redemption prior thereto as herein provided, at a rate of interest of 4.15% per annum (computed on the basis of actual days elapsed and a 360-day year composed of twelve 30-day months). The Notes shall be subject to redemption at the option of the City upon notice as hereinafter provided and shall be redeemed and cancelled contemporaneously with the issuance of general obligation improvement bonds of the City issued in lieu thereof to provide permanent financing of the Project.

Both principal of and interest on said Notes shall be payable in lawful money of the United States of America by check or draft at the office of the City Treasurer of the City upon presentation and surrender of said Notes.

The City reserves the right to redeem and pay said Notes, in whole or in part (and if in part in denominations of $100,000 selected by the City in its sole discretion), at any date prior to the stated maturity of said Notes by notice thereof given in writing by first class mail to the original purchaser of the Notes and to any known holder of the Notes or by the publication of such notice at least one time in a newspaper published or of general circulation in the metropolitan Kansas City area, and payment of said Notes, such publication of such notice or mailing of written notification of redemption to the original purchaser and the known holder to be at least twenty days prior to the redemption date fixed in such notice. Notice of such redemption having been given as aforesaid, interest shall cease to accrue on said Notes from and after the redemption date.

Section Three. Security for the Notes. The full faith, credit and resources of the City of Leawood, Kansas, shall be and the same are hereby irrevocably pledged for the prompt payment of the principal of and interest on the Notes.

The Governing Body of the City shall make provisions for the payment of said Notes by the issuance of renewal notes or general obligation bonds of the City to provide permanent financing of the Project upon the completion thereof. If said bonds shall not be so issued and the Notes shall not be so paid, the Governing Body shall levy and collect a tax upon all taxable tangible property within the territorial limits of the City in an amount sufficient to pay the principal of and

interest on said Notes as the same become due and payable.

Section Four. Form of Notes. Each of said Notes shall be in customary form as provided by law, shall be signed by the Mayor and attested by the City Clerk of the City and shall have the seal of said City affixed thereto.

Section Five. Execution and Delivery. The Mayor and City Clerk of the City are hereby authorized and directed to prepare and execute the Notes herein authorized in the form and substance hereinbefore described and as provided by law and to procure the proper registration in the office of the City Clerk and in the office of the Treasurer of the State of Kansas, and when so executed and registered, said Notes shall be countersigned by the City Clerk and delivered to United Missouri Bank, the original purchaser thereof, upon payment of the purchase price therefor which shall not be less than 99.538% of the principal amount thereof plus accrued interest to the date of delivery thereof to the original purchaser thereof.

Section Six. Disposition of Proceeds. The proceeds of the sale of the Notes shall be deposited with the City Treasurer to be used to redeem and retire the Prior Notes.

Section Seven. Tax Covenants. The City covenants and agrees that (1) it will comply with each and every provision of Section 103 and Sections 141 through 150 of the Internal Revenue Code of 1986, as amended (the "Code"), that is or may become applicable to the Notes, necessary to maintain the exclusion from gross income for federal income tax purposes of the interest on the Notes, including but not limited to any provisions requiring the rebate of earnings on amounts held in funds or accounts created with respect to the Notes and (2) it will not use or permit the use of any of the proceeds of the Notes or other funds of the City nor take or permit any other action, or fail to take any action, if any such action or failure to act would adversely affect the exclusion from gross income for federal income tax purposes of the interest on the Notes; provided, however, the foregoing provision in (1) above shall be and become null and void if and to the extent that the City shall receive an opinion from nationally recognized bond counsel which concludes that compliance with the foregoing covenant and the provisions of the Code as provided in this section shall not be required to maintain and continue the tax-exempt status of the interest income on the Notes.

Section Eight. Further Authority. The duly elected and appointed officers of the City, including the Mayor, the City Clerk and the Finance Director, are hereby further authorized and directed to execute all documents and take such actions as they may deem necessary or advisable in order to carry out and perform the purposes of this Ordinance and to make ministerial alterations, changes or

additions in the foregoing agreements, statements, instruments and other documents herein approved, authorized and confirmed which they may approve, and the execution or taking of such action shall be conclusive evidence of such necessity or advisability.

Section Nine. Effective Date. That this Ordinance shall take effect and be in force after its publication as provided by law.

PASSED by the Council the 17 th day of June, 1996.

APPROVED by the Mayor the 17 th day of June, 1996.

(S E A L)

Marcia Rinehart

Marcia Rinehart, Mayor

ATTEST:

Martha Heizer

Martha Heizer, City Clerk

APPROVED FOR FORM:

R. S. Wetzler, City Attorney

WII-tnnmr140

The Legal Record
600 E. Santa Fe, Suite 4
Olathe, KS 66061-3700

ORD1590

Publication Fees: $86.71

CITY OF LEAWOOD
ATTN: MARTHA HEIZER
4800 TOWN CENTER DR
LEAWOOD, KS 66211

Proof of Publication

STATE OF KANSAS, JOHNSON COUNTY, SS;
Tammy Schwien, of lawful age, being first duly sworn, deposes and says that she is Legal Notices Administrator of The Legal Record which is a newspaper printed in the State of Kansas, published in and of general paid circulation on a weekly, monthly or yearly basis in Johnson County, Kansas, is not a trade, religious or fraternal publication, is published at least weekly fifty (50) times a year, has been so published continuously and uninterrupted in said County and State for a period of more than five (5) years prior to the first publication of the notice attached, and has been admitted at the post office as second class matter.
That a notice was published in all editions of the regular and entire issue for the following subject matter (also identified by the following case number, if any) for 1 consecutive week(s), as follows:

ORDINANCE NO. 1590--6/4/96

Tammy Schwien
Legal Notices Administrator

Subscribed and sworn to before me on this date:
June 19, 1996

Debra Dziadura
Notary Public

DEBRA DZIADURA
Notary Public - State of Kansas

My appointment expires: August 21, 1999.

$86.71

ORDINANCE NO. 1590

First published in The Legal Record, Tuesday, June 18, 1996.

ORDINANCE NO. 1590

AN ORDINANCE AUTHORIZING AND PROVIDING FOR THE ISSUANCE AND DELIVERY OF TEMPORARY NOTES, PROJECT 140 (83RD STREET), OF THE CITY OF LEAWOOD, KANSAS, IN THE PRINCIPAL AMOUNT OF $700,000 TO PROVIDE TEMPORARY FINANCING OF THE COST OF IMPROVEMENT OR REIMPROVEMENT OF 83RD STREET, INCLUDING GRADING, REGRADING, CURBING, RECURBING, GUTTERING, REGUTTERING, PAVING, REPAVING, MACADAMIZING, REMACADAMIZING, CONSTRUCTING, RECONSTRUCTING, OPENING, WIDENING, EXTENDING, ROUNDING CORNERS, STRAIGHTENING, RELOCATING, CONSTRUCTION OR RECONSTRUCTION OF ANY NECESSARY BRIDGES AND APPROACHES THERETO, VIADUCTS, OVERPASSES, UNDERPASSES, CULVERTS, STORM DRAINAGE, TRAFFICWAY ILLUMINATION, TRAFFIC CONTROL DEVICES, PEDESTRIAN WAYS, BICYCLE WAYS OR OTHER IMPROVEMENTS AND OTHER INCIDENTAL CONSTRUCTION COSTS, IN THE CITY OF LEAWOOD.

WHEREAS, pursuant to K.S.A. 12-685, et seq., as amended, and Ordinance No. 1424, the Governing Body of the City of Leawood, Kansas (the "City") has heretofore authorized the following described improvement project within the City, to wit: Improvement of 83rd Street beginning at a point on the Kansas/Missouri state line which is the centerline of 83rd Street and 111.18 feet east of the centerline of State Line Road; thence west along the centerline of 83rd Street to a point on the west corporate city limit, said point being approximately 650.10 feet west of the centerline of Wenonga Road (south), within the City of Leawood (the "Project") at an estimated cost of $3,095,816.00; and

WHEREAS, the Project has been commenced and the City has heretofore issued its Temporary Notes, Project 140 (83rd Street), dated October 10, 1995 in the principal amount of $500,000 and January 2, 1996, in the principal amount of $500,000 (the "Prior Notes") to provide funds to pay the costs of the Project heretofore incurred by the City, said Prior Notes to become due and payable in the immediate future; and;

WHEREAS, the City is authorized by law and in particular K.S.A. 10-123, as amended, to issue temporary notes of the City to provide funds to redeem and pay the Prior Notes and to pay the costs of the Project as the same become due and payable.

NOW, THEREFORE, BE IT ORDAINED BY THE GOVERNING BODY OF THE CITY OF LEAWOOD, KANSAS, AS FOLLOWS:

Section One. Authorization of Notes. That in order to provide funds to re-

CONTINUED ON PAGE 21

ecome applicable to the Notes, necessary to maintain the exclusion from gross ncome for federal income tax purposes of the interest on the Notes, including but ot limited to any provisions requiring the rebate of earnings on amounts held in unds or accounts created with respect to the Notes and (2) it will not use or ermit the use of any of the proceeds of the Notes or other funds of the City nor ake or permit any other action, or fail to take any action, if any such action or ailure to act would adversely affect the exclusion from gross income for federal ncome tax purposes of the interest on the Notes; provided, however, the foregoing rovision in (1) above shall be and become null and void if and to the extent that he City shall receive an opinion from nationally recognized bond counsel hich concludes that compliance with the foregoing covenant and the provisions of o Code as provided in this section shall not be required to maintain and ontinue the tax-exempt status of the interest income on the Notes.

Section Eight. Further Authority. The duly elected and appointed officers the City, including the Mayor, the City Clerk and the Finance Director, are reby further authorized and directed to execute all documents and take such tions as they may deem necessary or advisable in order to carry out and perform he purposes of this Ordinance and to make ministerial alterations, changes or dditions in the foregoing agreements, statements, instruments and other documents rein approved, authorized and confirmed which they may approve, and the xecution or taking of such action shall be conclusive evidence of such necessity r advisability.

Section Nine. Effective Date. That this Ordinance shall take effect and be n force after its publication as provided by law.

PASSED by the Council the 17 th day of June, 1996.

APPROVED by the Mayor the 17 th day of June, 1996.

(S E A L)

Marcia Rinehart, Mayor

ATTEST:

Martha Heizer, City Clerk

APPROVED FOR FORM:

R. S. Wetzler, City Attorney

CONTINUED FROM PAGE 20

deem and pay the Prior Notes to become due in the immediate future, there shall be issued and the City is hereby authorized to issue temporary notes of the City, designated City of Leawood, Kansas, Temporary Notes, Project 140 (83rd Street), in the aggregate principal amount of Seven Hundred Thousand Dollars ($700,000) (the "Notes"). The amount of the Notes together with other temporary notes heretofore issued to finance the Project which remain outstanding does not exceed the total estimated costs of said Project.

Section Two. Terms of the Notes. Said issue of Notes shall consist of bearer notes numbered 1 through 7 inclusive, each in the denomination of $100,000. Each of said Notes shall be dated July 1, 1996, shall mature by their stated terms and become due and payable on March 20, 1997. The Notes shall bear interest from their dated date, payable at maturity or upon redemption prior thereto as herein provided, at a rate of interest of 4.15% per annum (computed on the basis of actual days elapsed and a 360-day year composed of twelve 30-day months). The Notes shall be subject to redemption at the option of the City upon notice as hereinafter provided and shall be redeemed and cancelled contemporaneously with the issuance of general obligation improvement bonds of the City issued in lieu thereof to provide permanent financing of the Project.

Both principal of and interest on said Notes shall be payable in lawful money of the United States of America by check or draft at the office of the City Treasurer of the City upon presentation and surrender of said Notes.

The City reserves the right to redeem and pay said Notes, in whole or in part (and if in part in denominations of $100,000 selected by the City in its sole discretion), at any date prior to the stated maturity of said Notes by notice thereof given in writing by first class mail to the original purchaser of the Notes and to any known holder of the Notes or by the publication of such notice at least one time in a newspaper published or of general circulation in the metropolitan Kansas City area, and payment of said Notes, such publication of such notice or mailing of written notification of redemption to the original purchaser and the known holder to be at least twenty days prior to the redemption date fixed in such notice. Notice of such redemption having been given as aforesaid, interest shall cease to accrue on said Notes from and after the redemption date.

Section Three. Security for the Notes. The full faith, credit and resources of the City of Leawood, Kansas, shall be and the same are hereby irrevocably pledged for the prompt payment of the principal of and interest on the Notes.

The Governing Body of the City shall make provisions for the payment of said Notes by the issuance of renewal notes or general obligation bonds of the City to provide permanent financing of the Project upon the completion thereof. If said bonds shall not be so issued and the Notes shall not be so paid, the Governing Body shall levy and collect a tax upon all taxable tangible property within the territorial limits of the City in an amount sufficient to pay the principal of and interest on said Notes as the same become due and payable.

Section Four. Form of Notes. Each of said Notes shall be in customary form as provided by law, shall be signed by the Mayor and attested by the City Clerk of the City and shall have the seal of said City affixed thereto.

Section Five. Execution and Delivery. The Mayor and City Clerk of the City are hereby authorized and directed to prepare and execute the Notes herein authorized in the form and substance hereinbefore described and as provided by law and to procure the proper registration in the office of the City Clerk and in the office of the Treasurer of the State of Kansas, and when so executed and registered, said Notes shall be countersigned by the City Clerk and delivered to United Missouri Bank, the original purchaser thereof, upon payment of the purchase price therefor which shall not be less than 99.538% of the principal amount thereof plus accrued interest to the date of delivery thereof to the original purchaser thereof.

Section Six. Disposition of Proceeds. The proceeds of the sale of the Notes shall be deposited with the City Treasurer to be used to redeem and retire the Prior Notes.

Section Seven. Tax Covenants. The City covenants and agrees that (1) it will comply with each and every provision of Section 103 and Sections 141 through 150 of the Internal Revenue Code of 1986, as amended (the "Code"), that is or may become applicable to the Notes, necessary to maintain the exclusion from gross income for federal income tax purposes of the interest on the Notes, including but not limited to any provisions requiring the rebate of earnings on amounts held in funds or accounts created with respect to the Notes and (2) it will not use or permit the use of any of the proceeds of the Notes or other funds of the City nor take or permit any other action, or fail to take any action, if any such action or failure to act would adversely affect the exclusion from gross income for federal income tax purposes of the interest on the Notes; provided, however, the foregoing provision in (1) above shall be and become null and void if and to the extent that the City shall receive an opinion from nationally recognized bond counsel which concludes that compliance with the foregoing covenant and the provisions of the Code as provided in this section shall not be required to maintain and continue the tax-exempt status of the interest income on the Notes.

Section Eight. Further Authority. The duly elected and appointed officers of the City, including the Mayor, the City Clerk and the Finance Director, are hereby further authorized and directed to execute all documents and take such actions as they may deem necessary or advisable in order to carry out and perform the purposes of this Ordinance and to make ministerial alterations, changes or additions in the foregoing agreements, statements, instruments and other documents herein approved, authorized and confirmed which they may approve, and the execution or taking of such action shall be conclusive evidence of such necessity or advisability.

Section Nine. Effective Date. That this Ordinance shall take effect and be in force after its publication as provided by law.

PASSED by the Council the 17 th day of June, 1996.

APPROVED by the Mayor, the 17 th day of June, 1996.

(S E A L)

Marcia Rinehart

Marcia Rinehart, Mayor

ATTEST:

Martha Heizer

Martha Heizer, City Clerk

APPROVED FOR FORM:

R. S. Wetzler, City Attorney

WII-tnnmr180

ORDINANCE NO. 1589

AN ORDINANCE AUTHORIZING AND PROVIDING FOR THE ISSUANCE AND DELIVERY OF TEMPORARY NOTES, SERIES 137-95-34 (STATE LINE ROAD, PHASE IV), OF THE CITY OF LEAWOOD, KANSAS, IN THE PRINCIPAL AMOUNT OF $100,000 TO PROVIDE TEMPORARY FINANCING OF THE COST OF IMPROVEMENT OR REIMPROVEMENT TO STATE LINE ROAD FROM A POINT 25.50 FEET SOUTH OF THE CENTERLINE OF 103RD STREET TO A POINT 123.76 FEET SOUTH OF THE CENTERLINE OF CARONDOLET, INCLUDING GRADING, REGRADING, CURBING, RECURBING, GUTTERING, REGUTTERING, PAVING, REPAVING, MACADAMIZING, REMACADAMIZING, CONSTRUCTING, RECONSTRUCTING, OPENING, WIDENING, EXTENDING, ROUNDING CORNERS, STRAIGHTENING, RELOCATING, CONSTRUCTION OR RECONSTRUCTION OF ANY NECESSARY BRIDGES, APPROACHES THERETO, VIADUCTS, OVERPASSES, UNDERPASSES, CULVERTS, STORM DRAINAGE, TRAFFICWAY ILLUMINATION, TRAFFIC CONTROL DEVICES, PEDESTRIAN WAYS, BICYCLE WAYS, OR OTHER IMPROVEMNETS OR ANY TWO OR MORE OF SUCH IMPROVEMENTS OR REIMPROVEMENTS AND OTHER INCIDENTAL CONSTRUCTION COSTS, IN THE CITY OF LEAWOOD.

WHEREAS, pursuant to K.S.A. 12-685, et seq., as amended, and Ordinance No. 1372, the Governing Body of the City of Leawood, Kansas (the "City") has heretofore authorized the following described improvement project within the City, to wit: improvement of State Line Road from a point 25.50 feet south of the centerline of 103rd Street, to a point 123.76 feet south of the centerline of Carondolet, a distance of approximately 2646 feet, within the City of Leawood (the "Project") at an estimated cost of $3,680,000; and

WHEREAS, the Project has been commenced and the City has heretofore issued its Temporary Notes, Series 137-95-6 (State Line Road, Phase IV), dated October 10, 1995, in the principal amount of $100,000 (the "Prior Notes") to provide funds to pay the costs of the Project heretofore incurred by the City and said Prior Notes become due and payable in the immediate future; and

WHEREAS, the City is authorized by law and in particular K.S.A. 10-123, as amended, to issue temporary notes of the City to provide funds to redeem and pay the Prior Notes as the same become due and payable.

NOW, THEREFORE, BE IT ORDAINED BY THE GOVERNING BODY OF THE CITY OF LEAWOOD, KANSAS, AS FOLLOWS:

Section One. Authorization of Notes. That in order to provide funds to redeem and pay the Prior Notes to become due in the immediate future there shall be issued and the City is hereby authorized to issue temporary notes of the City, designated City of Leawood, Kansas, Temporary Notes, Series 137-95-34 (State Line Road, Phase IV), in the aggregate principal amount of One Hundred Thousand Dollars ($100,000) (the "Notes"). The amount of the Notes together with other temporary

notes heretofore issued to finance the Project which remain outstanding does not exceed the total estimated costs of said Project.

Section Two. Terms of the Notes. Said issue of Notes shall consist of bearer note number 1 in the denomination of $100,000. Each of said Notes shall be dated July 1, 1996, shall mature by their stated terms and become due and payable on March 20, 1997. The Notes shall bear interest from their dated date, payable at maturity or upon redemption prior thereto as herein provided, at a rate of interest of 4.20% per annum (computed on the basis of actual days elapsed and a 360-day year composed of twelve 30-day months). The Notes shall be subject to redemption at the option of the City upon notice as hereinafter provided and shall be redeemed and cancelled contemporaneously with the issuance of general obligation improvement bonds of the City issued in lieu thereof to provide permanent financing of the Project.

Both principal of and interest on said Notes shall be payable in lawful money of the United States of America by check or draft at the office of the City Treasurer of the City upon presentation and surrender of said Notes.

The City reserves the right to redeem and pay said Notes, in whole or in part (and if in part in denominations of $100,000 selected by the City in its sole discretion), at any date prior to the stated maturity of said Notes by notice thereof given in writing by first class mail to the original purchaser of the Notes and to any known holder of the Notes or by the publication of such notice at least one time in a newspaper published or of general circulation in the metropolitan Kansas City area, and payment of said Notes, such publication of such notice or mailing of written notification of redemption to the original purchaser and the known holder to be at least twenty days prior to the redemption date fixed in such notice. Notice of such redemption having been given as aforesaid, interest shall cease to accrue on said Notes from and after the redemption date.

Section Three. Security for the Notes. The full faith, credit and resources of the City of Leawood, Kansas, shall be and the same are hereby irrevocably pledged for the prompt payment of the principal of and interest on the Notes.

The Governing Body of the City shall make provisions for the payment of said Notes by the issuance of renewal notes or general obligation bonds of the City to provide permanent financing of the Project upon the completion thereof. If said bonds shall not be so issued and the Notes shall not be so paid, the Governing Body shall levy and collect a tax upon all taxable tangible property within the territorial limits of the City in an amount sufficient to pay the principal of and interest on said Notes as the same become due and payable.

Section Four. Form of Notes. Each of said Notes shall be in customary form

as provided by law, shall be signed by the Mayor and attested by the City Clerk of the City and shall have the seal of said City affixed thereto.

Section Five. Execution and Delivery. The Mayor and City Clerk of the City are hereby authorized and directed to prepare and execute the Notes herein authorized in the form and substance hereinbefore described and as provided by law and to procure the proper registration in the office of the City Clerk and in the office of the Treasurer of the State of Kansas, and when so executed and registered, said Notes shall be countersigned by the City Clerk and delivered to Country Club Bank, the original purchaser thereof, upon payment of the purchase price therefor which shall not be less than 99.68% of the principal amount thereof plus accrued interest to the date of delivery thereof to the original purchaser thereof.

Section Six. Disposition of Proceeds. The proceeds of the sale of the Notes shall be deposited with the City Treasurer to be used to redeem and retire the Prior Notes.

Section Seven. Tax Covenants. The City covenants and agrees that (1) it will comply with each and every provision of Section 103 and Sections 141 through 150 of the Internal Revenue Code of 1986, as amended (the "Code"), that is or may become applicable to the Notes, necessary to maintain the exclusion from gross income for federal income tax purposes of the interest on the Notes, including but not limited to any provisions requiring the rebate of earnings on amounts held in funds or accounts created with respect to the Notes and (2) it will not use or permit the use of any of the proceeds of the Notes or other funds of the City nor take or permit any other action, or fail to take any action, if any such action or failure to act would adversely affect the exclusion from gross income for federal income tax purposes of the interest on the Notes; provided, however, the foregoing provision in (1) above shall be and become null and void if and to the extent that the City shall receive an opinion from nationally recognized bond counsel which concludes that compliance with the foregoing covenant and the provisions of the Code as provided in this section shall not be required to maintain and continue the tax-exempt status of the interest income on the Notes.

Section Eight. Further Authority. The duly elected and appointed officers of the City, including the Mayor, the City Clerk and the Finance Director, are hereby further authorized and directed to execute all documents and take such actions as they may deem necessary or advisable in order to carry out and perform the purposes of this Ordinance and to make ministerial alterations, changes or additions in the foregoing agreements, statements, instruments and other documents herein approved, authorized and confirmed which they may approve, and the

execution or taking of such action shall be conclusive evidence of such necessity or advisability.

Section Nine. Effective Date. That this Ordinance shall take effect and be in force after its publication as provided by law.

PASSED by the Council the 17 th day of June, 1996.

APPROVED by the Mayor the 17 th day of June, 1996.

(S E A L)

Marcia Rinehart

Marcia Rinehart, Mayor

ATTEST:

Martha Heizer

Martha Heizer, City Clerk

APPROVED FOR FORM:

R. S. Wetzler, City Attorney

WII-tnr137

ORD1589

Publication Fees: $84.53

The Legal Record
600 E. Santa Fe, Suite 4
Olathe, KS 66061-3700

CITY OF LEAWOOD
ATTN: MARTHA HEIZER
4800 TOWN CENTER DR
LEAWOOD, KS 66211

Proof of Publication

STATE OF KANSAS, JOHNSON COUNTY, SS;
Tammy Schwien, of lawful age, being first duly sworn, deposes and says that she is Legal Notices Administrator of The Legal Record which is a newspaper printed in the State of Kansas, published in and of general paid circulation on a weekly, monthly or yearly basis in Johnson County, Kansas, is not a trade, religious or fraternal publication, is published at least weekly fifty (50) times a year, has been so published continuously and uninterrupted in said County and State for a period of more than five (5) years prior to the first publication of the notice attached, and has been admitted at the post office as second class matter.
That a notice was published in all editions of the regular and entire issue for the following subject matter (also identified by the following case number, if any) for 1 consecutive week(s), as follows:

ORDINANCE NO. 1589--6/4/96

Tammy Schwien
Legal Notices Administrator

Subscribed and sworn to before me on this date:
June 19, 1996

Debra Dziadura
Notary Public

DEBRA DZIADURA
Notary Public - State of Kansas

My appointment expires: August 21, 1999.

$84.53

ORDINANCE NO. 1589

First published in The Legal Record, Tuesday, June 18, 1996.

ORDINANCE NO. 1589

AN ORDINANCE AUTHORIZING AND PROVIDING FOR THE ISSUANCE AND DELIVERY OF TEMPORARY NOTES, SERIES 137-95-34 (STATE LINE ROAD, PHASE IV), OF THE CITY OF LEAWOOD, KANSAS, IN THE PRINCIPAL AMOUNT OF $100,000 TO PROVIDE TEMPORARY FINANCING OF THE COST OF IMPROVEMENT OR REIMPROVEMENT TO STATE LINE ROAD FROM A POINT 25.50 FEET SOUTH OF THE CENTERLINE OF 103RD STREET TO A POINT 123.76 FEET SOUTH OF THE CENTERLINE OF CARONDOLET, INCLUDING GRADING, REGRADING, CURBING, RECURBING, GUTTERING, REGUTTERING, PAVING, REPAVING, MACADAMIZING, REMACADAMIZING, CONSTRUCTING, RECONSTRUCTING, OPENING, WIDENING, EXTENDING, ROUNDING CORNERS, STRAIGHTENING, RELOCATING, CONSTRUCTION OR RECONSTRUCTION OF ANY NECESSARY BRIDGES, APPROACHES THERETO, VIADUCTS, OVERPASSES, UNDERPASSES, CULVERTS, STORM DRAINAGE, TRAFFICWAY ILLUMINATION, TRAFFIC CONTROL DEVICES, PEDESTRIAN WAYS, BICYCLE WAYS, OR OTHER IMPROVEMNETS OR ANY TWO OR MORE OF SUCH IMPROVEMENTS OR REIMPROVEMENTS AND OTHER INCIDENTAL CONSTRUCTION COSTS, IN THE CITY OF LEAWOOD.

WHEREAS, pursuant to K.S.A. 12-685, et seq., as amended, and Ordinance No. 1372, the Governing Body of the City of Leawood, Kansas (the "City") has heretofore authorized the following described improvement project within the City, to wit: improvement of State Line Road from a point 25.50 feet south of the centerline of 103rd Street, to a point 123.76 feet south of the centerline of Carondolet, a distance of approximately 2646 feet, within the City of Leawood (the "Project") at an estimated cost of $3,680,000; and

WHEREAS, the Project has been commenced and the City has heretofore issued its Temporary Notes, Series 137-95-6 (State Line Road, Phase IV), dated October 10, 1995, in the principal amount of $100,000 (the "Prior Notes") to provide funds to pay the costs of the Project heretofore incurred by the City and said Prior Notes become due and payable in the immediate future; and

WHEREAS, the City is authorized by law and in particular K.S.A. 10-123, as amended, to issue temporary notes of the City to provide funds to redeem and pay the Prior Notes as the same become due and payable.

NOW, THEREFORE, BE IT ORDAINED BY THE GOVERNING BODY OF THE CITY OF LEAWOOD, KANSAS, AS FOLLOWS:

Section One. Authorization of Notes. That in order to provide funds to redeem and pay the Prior Notes to become due in the immediate future there shall be issued and the City is hereby authorized to issue temporary notes of the City, designated City of Leawood, Kansas, Temporary Notes, Series 137-95-34 (State Line Road, Phase IV), in the aggregate principal amount of One Hundred Thousand Dollars ($100,000) (the "Notes"). The amount of the Notes together with other temporary notes heretofore issued to finance the Project which remain outstanding does not exceed the total estimated costs of said Project.

Section Two. Terms of the Notes. Said issue of Notes shall consist of bearer note number 1 in the denomination of $100,000. Each of said Notes shall be dated July 1, 1996, shall mature by their stated terms and become due and payable on March 20, 1997. The Notes shall bear interest from their dated date, payable at maturity or upon redemption prior thereto as herein provided, at a rate of interest of 4.20% per annum (computed on the basis of actual days elapsed and a 360-day year composed of twelve 30-day months). The Notes shall be subject to redemption at the option of the City upon notice as hereinafter provided and shall be redeemed and cancelled contemporaneously with the issuance of general obligation improvement bonds of the City issued in lieu thereof to provide permanent financing of the Project.

Both principal of and interest on said Notes shall be payable in lawful money of the United States of America by check or draft at the office of the City Treasurer of the City upon presentation and surrender of said Notes.

The City reserves the right to redeem and pay said Notes, in whole or in part (and if in part in denominations of $100,000 selected by the City in its sole discretion), at any date prior to the stated maturity of said Notes by notice thereof given in writing by first class mail to the original purchaser of the Notes and to any known holder of the Notes or by the publication of such notice at least one time in a newspaper published or of general circulation in the metropolitan Kansas City area, and payment of said Notes, such publication of such notice or mailing of written notification of redemption to the original purchaser and the known holder to be at least twenty days prior to the redemption date fixed in such notice. Notice of such redemption having been given as aforesaid, interest shall cease to accrue on said Notes from and after the redemption date.

Section Three. Security for the Notes. The full faith, credit and resources of the City of Leawood, Kansas, shall be and the same are hereby irrevocably pledged for the prompt payment of the principal of and interest on the Notes.

The Governing Body of the City shall make provisions for the payment of said Notes by the issuance of renewal notes or general obligation bonds of the City to provide permanent financing of the Project upon the completion thereof. If said bonds shall not be so issued and the Notes shall not be so paid, the Governing Body shall levy and collect a tax upon all taxable tangible property within the territorial limits of the City in an amount sufficient to pay the principal of and interest on said Notes as the same become due and payable.

Section Four. Form of Notes. Each of said Notes shall be in customary form as provided by law, shall be signed by the Mayor and attested by the City Clerk of the City and shall have the seal of said City affixed thereto.

Section Five. Execution and Delivery. The Mayor and City Clerk of the City are hereby authorized and directed to prepare and execute the Notes herein authorized in the form and substance hereinbefore described and as provided by law and to procure the proper registration in the office of the City Clerk and in the office of the Treasurer of the State of Kansas, and when so executed and registered, said Notes shall be countersigned by the City Clerk and delivered to Country Club Bank, the original purchaser thereof, upon payment of the purchase price therefor which shall not be less than 99.68% of the principal amount thereof plus accrued interest to the date of delivery thereof to the original purchaser thereof.

Section Six. Disposition of Proceeds. The proceeds of the sale of the Notes shall be deposited with the City Treasurer to be used to redeem and retire the Prior Notes.

Section Seven. Tax Covenants. The City covenants and agrees that (1) it will comply with each and every provision of Section 103 and Sections 141 through 150 of the Internal Revenue Code of 1986, as amended (the "Code"), that is or may become applicable to the Notes, necessary to maintain the exclusion from gross income for federal income tax purposes of the interest on the Notes, including but not limited to any provisions requiring the rebate of earnings on amounts held in funds or accounts created with respect to the Notes and (2) it will not use or permit the use of any of the proceeds of the Notes or other funds of the City nor take or permit any other action, or fail to take any action, if any such action or failure to act would adversely affect the exclusion from gross income for federal income tax purposes of the interest on the Notes; provided, however, the foregoing

CONTINUED ON PAGE 17

CONTINUED FROM PAGE 16

provision in (1) above shall be and become null and void if and to the extent that the City shall receive an opinion from nationally recognized bond counsel which concludes that compliance with the foregoing covenant and the provisions of the Code as provided in this section shall not be required to maintain and continue the tax-exempt status of the interest income on the Notes.

Section Eight. Further Authority. The duly elected and appointed officers of the City, including the Mayor, the City Clerk and the Finance Director, are hereby further authorized and directed to execute all documents and take such actions as they may deem necessary or advisable in order to carry out and perform the purposes of this Ordinance and to make ministerial alterations, changes or additions in the foregoing agreements, statements, instruments and other documents herein approved, authorized and confirmed which they may approve, and the execution or taking of such action shall be conclusive evidence of such necessity or advisability.

Section Nine. Effective Date. That this Ordinance shall take effect and be in force after its publication as provided by law.

PASSED by the Council the 17 th day of June, 1996.

APPROVED by the Mayor the 17 th day of June, 1996.

(S E A L)

Marcia Rinehart, Mayor

ATTEST:

Martha Heizer, City Clerk

APPROVED FOR FORM:

R. S. Wetzler, City Attorney

ORDINANCE NO. 1588

AN ORDINANCE AUTHORIZING AND PROVIDING FOR THE ISSUANCE AND DELIVERY OF TEMPORARY NOTES, PROJECT 131 (NALL AVENUE, 119TH-135TH STREET), OF THE CITY OF LEAWOOD, KANSAS, IN THE PRINCIPAL AMOUNT OF $500,000 TO PROVIDE TEMPORARY FINANCING OF THE COST OF IMPROVEMENT OR REIMPROVEMENT OF NALL AVENUE, 119TH-135TH STREET, INCLUDING GRADING, REGRADING, CURBING, RECURBING, GUTTERING, REGUTTERING, PAVING, REPAVING, MACADAMIZING, REMACADAMIZING, CONSTRUCTING, RECONSTRUCTING, OPENING, WIDENING, EXTENDING, ROUNDING CORNERS, STRAIGHTENING, RELOCATING, CONSTRUCTION OR RECONSTRUCTION OF ANY NECESSARY BRIDGES AND APPROACHES THERETO, VIADUCTS, OVERPASSES, UNDERPASSES, CULVERTS, STORM DRAINAGE, TRAFFICWAY ILLUMINATION, TRAFFIC CONTROL DEVICES, PEDESTRIAN WAYS, BICYCLE WAYS OR OTHER IMPROVEMENTS AND OTHER INCIDENTAL CONSTRUCTION COSTS, IN THE CITY OF LEAWOOD.

WHEREAS, pursuant to K.S.A. 12-685, et seq., as amended, and Ordinance No. 1433, the Governing Body of the City of Leawood, Kansas (the "City") has heretofore authorized the following described improvement project within the City, to wit: improvement of Nall Avenue beginning at a point on the west line of Section 28-13-25, 2651 feet north of the centerline of 135th Street said point being the common city limit lines of Leawood, Kansas, and Overland Park, Kansas; thence north 3985 feet along the west line of Section 28-13-25 and Section 21-13-25 to a point on the common city limit lines of Leawood, Kansas, and Overland Park, Kansas, said point being 3997 feet south of the centerline of 119th Street, within the City of Leawood (the "Project") at an estimated cost of $7,604,683; and

WHEREAS, the Project has been commenced and the City has heretofore issued its Temporary Notes, Project 131 (Nall Avenue, 119th-135th Street), dated October 10, 1995, in the principal amount of $500,000 (the "Prior Notes") to provide funds to pay the costs of the Project heretofore incurred by the City, said Prior Notes to become due and payable in the immediate future; and

WHEREAS, the City is authorized by law and in particular K.S.A. 10-123, as amended, to issue temporary notes of the City to provide funds to redeem and pay the Prior Notes and to pay the costs of the Project as the same become due and payable.

NOW, THEREFORE, BE IT ORDAINED BY THE GOVERNING BODY OF THE CITY OF LEAWOOD, KANSAS, AS FOLLOWS:

Section One. Authorization of Notes. That in order to provide funds to redeem and pay the Prior Notes to become due in the immediate future, there shall be issued and the City is hereby authorized to issue temporary notes of the City,

designated City of Leawood, Kansas, Temporary Notes, Project 131 (Nall Avenue, 119th-135th Street), in the aggregate principal amount of Five Hundred Thousand Dollars ($500,000) (the "Notes"). The amount of the Notes together with other temporary notes heretofore issued to finance the Project which remain outstanding does not exceed the total estimated costs of said Project.

Section Two. Terms of the Notes. Said issue of Notes shall consist of bearer notes numbered 1 through 5 inclusive, each in the denomination of $100,000. Each of said Notes shall be dated July 1, 1996, shall mature by their stated terms and become due and payable on March 20, 1997. The Notes shall bear interest from their dated date, payable at maturity or upon redemption prior thereto as herein provided, at a rate of interest of 4.20% per annum (computed on the basis of actual days elapsed and a 360-day year composed of twelve 30-day months). The Notes shall be subject to redemption at the option of the City upon notice as hereinafter provided and shall be redeemed and cancelled contemporaneously with the issuance of general obligation improvement bonds of the City issued in lieu thereof to provide permanent financing of the Project.

Both principal of and interest on said Notes shall be payable in lawful money of the United States of America by check or draft at the office of the City Treasurer of the City upon presentation and surrender of said Notes.

The City reserves the right to redeem and pay said Notes, in whole or in part (and if in part in denominations of $100,000 selected by the City in its sole discretion), at any date prior to the stated maturity of said Notes by notice thereof given in writing by first class mail to the original purchaser of the Notes and to any known holder of the Notes or by the publication of such notice at least one time in a newspaper published or of general circulation in the metropolitan Kansas City area, and payment of said Notes, such publication of such notice or mailing of written notification of redemption to the original purchaser and the known holder to be at least twenty days prior to the redemption date fixed in such notice. Notice of such redemption having been given as aforesaid, interest shall cease to accrue on said Notes from and after the redemption date.

Section Three. Security for the Notes. The full faith, credit and resources of the City of Leawood, Kansas, shall be and the same are hereby irrevocably pledged for the prompt payment of the principal of and interest on the Notes.

The Governing Body of the City shall make provisions for the payment of said Notes by the issuance of renewal notes or general obligation bonds of the City to provide permanent financing of the Project upon the completion thereof. If said bonds shall not be so issued and the Notes shall not be so paid, the Governing Body shall levy and collect a tax upon all taxable tangible property within the

territorial limits of the City in an amount sufficient to pay the principal of and interest on said Notes as the same become due and payable.

Section Four. Form of Notes. Each of said Notes shall be in customary form as provided by law, shall be signed by the Mayor and attested by the City Clerk of the City and shall have the seal of said City affixed thereto.

Section Five. Execution and Delivery. The Mayor and City Clerk of the City are hereby authorized and directed to prepare and execute the Notes herein authorized in the form and substance hereinbefore described and as provided by law and to procure the proper registration in the office of the City Clerk and in the office of the Treasurer of the State of Kansas, and when so executed and registered, said Notes shall be countersigned by the City Clerk and delivered to Country Club Bank, the original purchaser thereof, upon payment of the purchase price therefor which shall not be less than 99.68% of the principal amount thereof plus accrued interest to the date of delivery thereof to the original purchaser thereof.

Section Six. Disposition of Proceeds. The proceeds of the sale of the Notes shall be deposited with the City Treasurer to be used to redeem and retire the Prior Notes.

Section Seven. Tax Covenants. The City covenants and agrees that (1) it will comply with each and every provision of Section 103 and Sections 141 through 150 of the Internal Revenue Code of 1986, as amended (the "Code"), that is or may become applicable to the Notes, necessary to maintain the exclusion from gross income for federal income tax purposes of the interest on the Notes, including but not limited to any provisions requiring the rebate of earnings on amounts held in funds or accounts created with respect to the Notes and (2) it will not use or permit the use of any of the proceeds of the Notes or other funds of the City nor take or permit any other action, or fail to take any action, if any such action or failure to act would adversely affect the exclusion from gross income for federal income tax purposes of the interest on the Notes; provided, however, the foregoing provision in (1) above shall be and become null and void if and to the extent that the City shall receive an opinion from nationally recognized bond counsel which concludes that compliance with the foregoing covenant and the provisions of the Code as provided in this section shall not be required to maintain and continue the tax-exempt status of the interest income on the Notes.

Section Eight. Further Authority. The duly elected and appointed officers of the City, including the Mayor, the City Clerk and the Finance Director, are hereby further authorized and directed to execute all documents and take such actions as they may deem necessary or advisable in order to carry out and perform

the purposes of this Ordinance and to make ministerial alterations, changes or additions in the foregoing agreements, statements, instruments and other documents herein approved, authorized and confirmed which they may approve, and the execution or taking of such action shall be conclusive evidence of such necessity or advisability.

Section Nine. Effective Date. That this Ordinance shall take effect and be in force after its publication as provided by law.

PASSED by the Council the 17 th day of June, 1996.

APPROVED by the Mayor the 17 th day of June, 1996.

(S E A L)

Marcia Rinehart

Marcia Rinehart, Mayor

ATTEST:

Martha Heizer

Martha Heizer, City Clerk

APPROVED FOR FORM:

R. S. Wetzler, City Attorney

WII-tnnmr131

The Legal Record
600 E. Santa Fe, Suite 4
Olathe, KS 66061-3700

ORD1588

Publication Fees: $87.44

CITY OF LEAWOOD
ATTN: MARTHA HEIZER
4800 TOWN CENTER DR
LEAWOOD, KS 66211

Proof of Publication

STATE OF KANSAS, JOHNSON COUNTY, SS;
Tammy Schwien, of lawful age, being first duly sworn, deposes and says that she is Legal Notices Administrator of The Legal Record which is a newspaper printed in the State of Kansas, published in and of general paid circulation on a weekly, monthly or yearly basis in Johnson County, Kansas, is not a trade, religious or fraternal publication, is published at least weekly fifty (50) times a year, has been so published continuously and uninterrupted in said County and State for a period of more than five (5) years prior to the first publication of the notice attached, and has been admitted at the post office as second class matter.
That a notice was published in all editions of the regular and entire issue for the following subject matter (also identified by the following case number, if any) for 1 consecutive week(s), as follows:

ORDINANCE NO. 1588--6/4/96

Tammy Schwien
Legal Notices Administrator

Subscribed and sworn to before me on this date:
June 19, 1996

Debra Dziadura
Notary Public

DEBRA DZIADURA
Notary Public - State of Kansas

My appointment expires: August 21, 1999.

$87.44

ORDINANCE NO. 1588

First published in The Legal Record, Tuesday, June 18, 1996.

ORDINANCE NO. 1588

AN ORDINANCE AUTHORIZING AND PROVIDING FOR THE ISSUANCE AND DELIVERY OF TEMPORARY NOTES, PROJECT 131 (NALL AVENUE, 119TH-135TH STREET), OF THE CITY OF LEAWOOD, KANSAS, IN THE PRINCIPAL AMOUNT OF $500,000 TO PROVIDE TEMPORARY FINANCING OF THE COST OF IMPROVEMENT OR REIMPROVEMENT OF NALL AVENUE, 119TH-135TH STREET, INCLUDING GRADING, REGRADING, CURBING, RECURBING, GUTTERING, REGUTTERING, PAVING, REPAVING, MACADAMIZING, REMACADAMIZING, CONSTRUCTING, RECONSTRUCTING, OPENING, WIDENING, EXTENDING, ROUNDING CORNERS, STRAIGHTENING, RELOCATING, CONSTRUCTION OR RECONSTRUCTION OF ANY NECESSARY BRIDGES AND APPROACHES THERETO, VIADUCTS, OVERPASSES, UNDERPASSES, CULVERTS, STORM DRAINAGE, TRAFFICWAY ILLUMINATION, TRAFFIC CONTROL DEVICES, PEDESTRIAN WAYS, BICYCLE WAYS OR OTHER IMPROVEMENTS AND OTHER INCIDENTAL CONSTRUCTION COSTS, IN THE CITY OF LEAWOOD.

WHEREAS, pursuant to K.S.A. 12-685, et seq., as amended, and Ordinance No. 1433, the Governing Body of the City of Leawood, Kansas (the "City") has heretofore authorized the following described improvement project within the City, to wit: improvement of Nall Avenue beginning at a point on the west line of Section 28-13-25, 2651 feet north of the centerline of 135th Street said point being the common city limit lines of Leawood, Kansas, and Overland Park, Kansas;

CONTINUED ON PAGE 22

CONTINUED FROM PAGE 21

thence north 3985 feet along the west line of Section 28-13-25 and Section 21-13-25 to a point on the common city limit lines of Leawood, Kansas, and Overland Park, Kansas, said point being 3997 feet south of the centerline of 119th Street, within the City of Leawood (the "Project") at an estimated cost of $7,604,683) and

WHEREAS, the Project has been commenced and the City has heretofore issued its Temporary Notes, Project 131 (Nall Avenue, 119th-135th Street), dated October 10, 1995, in the principal amount of $500,000 (the "Prior Notes") to provide funds to pay the costs of the Project heretofore incurred by the City, said Prior Notes to become due and payable in the immediate future; and

WHEREAS, the City is authorized by law and in particular K.S.A. 10-123, as amended, to issue temporary notes of the City to provide funds to redeem and pay the Prior Notes and to pay the costs of the Project as the same become due and payable.

NOW, THEREFORE, BE IT ORDAINED BY THE GOVERNING BODY OF THE CITY OF LEAWOOD, KANSAS, AS FOLLOWS:

Section One. Authorization of Notes. That in order to provide funds to redeem and pay the Prior Notes to become due in the immediate future, there shall be issued and the City is hereby authorized to issue temporary notes of the City, designated City of Leawood, Kansas, Temporary Notes, Project 131 (Nall Avenue, 119th-135th Street), in the aggregate principal amount of Five Hundred Thousand Dollars ($500,000) (the "Notes"). The amount of the Notes together with other temporary notes heretofore issued to finance the Project which remain outstanding does not exceed the total estimated costs of said Project.

Section Two. Terms of the Notes. Said issue of Notes shall consist of bearer notes numbered 1 through 5 inclusive, each in the denomination of $100,000. Each of said Notes shall be dated July 1, 1996, shall mature by their stated terms and become due and payable on March 20, 1997. The Notes shall bear interest from their dated date, payable at maturity or upon redemption prior thereto as herein provided, at a rate of interest of 4.20% per annum (computed on the basis of actual days elapsed and a 360-day year composed of twelve 30-day months). The Notes shall be subject to redemption at the option of the City upon notice as hereinafter provided and shall be redeemed and cancelled contemporaneously with the issuance of general obligation improvement bonds of the City issued in lieu thereof to provide permanent financing of the Project.

Both principal of and interest on said Notes shall be payable in lawful money of the United States of America by check or draft at the office of the City Treasurer of the City upon presentation and surrender of said Notes.

The City reserves the right to redeem and pay said Notes, in whole or in part (and if in part in denominations of $100,000 selected by the City in its sole discretion), at any date prior to the stated maturity of said Notes by notice thereof given in writing by first class mail to the original purchaser of the Notes and to any known holder of the Notes or by the publication of such notice at least one time in a newspaper published or of general circulation in the metropolitan Kansas City area, and payment of said Notes, such publication of such notice or mailing of written notification of redemption to the original purchaser and the known holder to be at least twenty days prior to the redemption date fixed in such notice. Notice of such redemption having been given as aforesaid, interest shall cease to accrue on said Notes from and after the redemption date.

Section Three. Security for the Notes. The full faith, credit and resources of the City of Leawood, Kansas, shall be and the same are hereby irrevocably pledged for the prompt payment of the principal of and interest on the Notes.

The Governing Body of the City shall make provisions for the payment of said Notes by the issuance of renewal notes or general obligation bonds of the City to provide permanent financing of the Project upon the completion thereof. If said bonds shall not be so issued and the Notes shall not be so paid, the Governing Body shall levy and collect a tax upon all taxable tangible property within the territorial limits of the City in an amount sufficient to pay the principal of and interest on said Notes as the same become due and payable.

Section Four. Form of Notes. Each of said Notes shall be in customary form as provided by law, shall be signed by the Mayor and attested by the City Clerk of the City and shall have the seal of said City affixed thereto.

Section Five. Execution and Delivery. The Mayor and City Clerk of the City are hereby authorized and directed to prepare and execute the Notes herein authorized in the form and substance hereinbefore described and as provided by law and to procure the proper registration in the office of the City Clerk and in the office of the Treasurer of the State of Kansas, and when so executed and registered, said Notes shall be countersigned by the City Clerk and delivered to Country Club Bank, the original purchaser thereof, upon payment of the purchase price therefor which shall not be less than 99.68% of the principal amount thereof plus accrued interest to the date of delivery thereof to the original purchaser thereof.

Section Six. Disposition of Proceeds. The proceeds of the sale of the Notes shall be deposited with the City Treasurer to be used to redeem and retire the Prior Notes.

Section Seven. Tax Covenants. The City covenants and agrees that (1) it will comply with each and every provision of Section 103 and Sections 141 through 150 of the Internal Revenue Code of 1986, as amended (the "Code"), that is or may become applicable to the Notes, necessary to maintain the exclusion from gross income for federal income tax purposes of the interest on the Notes, including but not limited to any provisions requiring the rebate of earnings on amounts held in funds or accounts created with respect to the Notes and (2) it will not use or permit the use of any of the proceeds of the Notes or other funds of the City nor take or permit any other action, or fail to take any action, if any such action or failure to act would adversely affect the exclusion from gross income for federal income tax purposes of the interest on the Notes; provided, however, the foregoing provision in (1) above shall be and become null and void if and to the extent that the City shall receive an opinion from nationally recognized bond counsel which concludes that compliance with the foregoing covenant and the provisions of the Code as provided in this section shall not be required to maintain and continue the tax-exempt status of the interest income on the Notes.

Section Eight. Further Authority. The duly elected and appointed officers of the City, including the Mayor, the City Clerk and the Finance Director, are hereby further authorized and directed to execute all documents and take such actions as they may deem necessary or advisable in order to carry out and perform the purposes of this Ordinance and to make ministerial alterations, changes or additions in the foregoing agreements, statements, instruments and other documents herein approved, authorized and confirmed which they may approve, and the execution or taking of such action shall be conclusive evidence of such necessity or advisability.

Section Nine. Effective Date. That this Ordinance shall take effect and be in force after its publication as provided by law.

PASSED by the Council the 17 th day of June, 1996.

APPROVED by the Mayor the 17 th day of June, 1996.

(S E A L)

Marcia Rinehart

Marcia Rinehart, Mayor

ATTEST:

Martha Heizer

Martha Heizer, City Clerk

APPROVED FOR FORM:

R. S. Wetzler, City Attorney

WII-tnnmr181

ORDINANCE NO. 1587

AN ORDINANCE AUTHORIZING AND PROVIDING FOR THE ISSUANCE AND DELIVERY OF TEMPORARY NOTES, PROJECT 126 (MISSION ROAD, 95TH STREET-103RD STREET), OF THE CITY OF LEAWOOD, KANSAS, IN THE PRINCIPAL AMOUNT OF $100,000 TO PROVIDE TEMPORARY FINANCING OF THE COST OF IMPROVEMENT OR REIMPROVEMENT OF MISSION ROAD, 95TH STREET-103RD STREET, INCLUDING GRADING, REGRADING, CURBING, RECURBING, GUTTERING, REGUTTERING, PAVING, REPAVING, MACADAMIZING, REMACADAMIZING, CONSTRUCTING, RECONSTRUCTING, OPENING, WIDENING, EXTENDING, ROUNDING CORNERS, STRAIGHTENING, RELOCATING, CONSTRUCTION OR RECONSTRUCTION OF ANY NECESSARY BRIDGES AND APPROACHES THERETO, VIADUCTS, OVERPASSES, UNDERPASSES, CULVERTS, STORM DRAINAGE, TRAFFICWAY ILLUMINATION, TRAFFIC CONTROL DEVICES, PEDESTRIAN WAYS, BICYCLE WAYS OR OTHER IMPROVEMENTS AND OTHER INCIDENTAL CONSTRUCTION COSTS, IN THE CITY OF LEAWOOD.

WHEREAS, pursuant to K.S.A. 12-685, et seq., as amended, and Ordinance No. 1330, the Governing Body of the City of Leawood, Kansas (the "City") has heretofore authorized the following described improvement project within the City, to wit: improvement of certain sections of Mission Road from 385 feet south of 95th Street to 385 feet south of 103rd Street within the City of Leawood (the "Project") at an estimated cost of $1,571,300; and

WHEREAS, the Project has been commenced and the City has heretofore issued its Temporary Notes, Project 126 (Mission Road, 95th Street-103rd Street), dated October 10, 1995, in the principal amount of $100,000 (the "Prior Notes") to provide funds to pay the costs of the Project heretofore incurred by the City and said Prior Notes become due and payable in the immediate future; and

WHEREAS, the City is authorized by law and in particular K.S.A. 10-123, as amended, to issue temporary notes of the City to provide funds to redeem and pay the Prior Notes as the same become due and payable.

NOW, THEREFORE, BE IT ORDAINED BY THE GOVERNING BODY OF THE CITY OF LEAWOOD, KANSAS, AS FOLLOWS:

Section One. Authorization of Notes. That in order to provide funds to redeem and pay the Prior Notes to become due in the immediate future there shall be issued and the City is hereby authorized to issue temporary notes of the City, designated City of Leawood, Kansas, Temporary Notes, Project 126 (Mission Road, 95th Street-103rd Street), in the aggregate principal amount of One Hundred Thousand Dollars ($100,000) (the "Notes"). The amount of the Notes together with other temporary notes heretofore issued to finance the Project which remain outstanding does not exceed the total estimated costs of said Project.

Section Two. Terms of the Notes. Said issue of Notes shall consist of

bearer note number 1 in the denomination of $100,000. Each of said Notes shall be dated July 1, 1996, shall mature by their stated terms and become due and payable on March 20, 1997. The Notes shall bear interest from their dated date, payable at maturity or upon redemption prior thereto as herein provided, at a rate of interest of 4.20% per annum (computed on the basis of actual days elapsed and a 360-day year composed of twelve 30-day months). The Notes shall be subject to redemption at the option of the City upon notice as hereinafter provided and shall be redeemed and cancelled contemporaneously with the issuance of general obligation improvement bonds of the City issued in lieu thereof to provide permanent financing of the Project.

Both principal of and interest on said Notes shall be payable in lawful money of the United States of America by check or draft at the office of the City Treasurer of the City upon presentation and surrender of said Notes.

The City reserves the right to redeem and pay said Notes, in whole or in part (and if in part in denominations of $100,000 selected by the City in its sole discretion), at any date prior to the stated maturity of said Notes by notice thereof given in writing by first class mail to the original purchaser of the Notes and to any known holder of the Notes or by the publication of such notice at least one time in a newspaper published or of general circulation in the metropolitan Kansas City area, and payment of said Notes, such publication of such notice or mailing of written notification of redemption to the original purchaser and the known holder to be at least twenty days prior to the redemption date fixed in such notice. Notice of such redemption having been given as aforesaid, interest shall cease to accrue on said Notes from and after the redemption date.

Section Three. Security for the Notes. The full faith, credit and resources of the City of Leawood, Kansas, shall be and the same are hereby irrevocably pledged for the prompt payment of the principal of and interest on the Notes.

The Governing Body of the City shall make provisions for the payment of said Notes by the issuance of renewal notes or general obligation bonds of the City to provide permanent financing of the Project upon the completion thereof. If said bonds shall not be so issued and the Notes shall not be so paid, the Governing Body shall levy and collect a tax upon all taxable tangible property within the territorial limits of the City in an amount sufficient to pay the principal of and interest on said Notes as the same become due and payable.

Section Four. Form of Notes. Each of said Notes shall be in customary form as provided by law, shall be signed by the Mayor and attested by the City Clerk of the City and shall have the seal of said City affixed thereto.

Section Five. Execution and Delivery. The Mayor and City Clerk of the City

are hereby authorized and directed to prepare and execute the Notes herein authorized in the form and substance hereinbefore described and as provided by law and to procure the proper registration in the office of the City Clerk and in the office of the Treasurer of the State of Kansas, and when so executed and registered, said Notes shall be countersigned by the City Clerk and delivered to Country Club Bank, the original purchaser thereof, upon payment of the purchase price therefor which shall not be less than 99.68% of the principal amount thereof plus accrued interest to the date of delivery thereof to the original purchaser thereof.

Section Six. Disposition of Proceeds. The proceeds of the sale of the Notes shall be deposited with the City Treasurer to be used to redeem and retire the Prior Notes.

Section Seven. Tax Covenants. The City covenants and agrees that (1) it will comply with each and every provision of Section 103 and Sections 141 through 150 of the Internal Revenue Code of 1986, as amended (the "Code"), that is or may become applicable to the Notes, necessary to maintain the exclusion from gross income for federal income tax purposes of the interest on the Notes, including but not limited to any provisions requiring the rebate of earnings on amounts held in funds or accounts created with respect to the Notes and (2) it will not use or permit the use of any of the proceeds of the Notes or other funds of the City nor take or permit any other action, or fail to take any action, if any such action or failure to act would adversely affect the exclusion from gross income for federal income tax purposes of the interest on the Notes; provided, however, the foregoing provision in (1) above shall be and become null and void if and to the extent that the City shall receive an opinion from nationally recognized bond counsel which concludes that compliance with the foregoing covenant and the provisions of the Code as provided in this section shall not be required to maintain and continue the tax-exempt status of the interest income on the Notes.

Section Eight. Further Authority. The duly elected and appointed officers of the City, including the Mayor, the City Clerk and the Finance Director, are hereby further authorized and directed to execute all documents and take such actions as they may deem necessary or advisable in order to carry out and perform the purposes of this Ordinance and to make ministerial alterations, changes or additions in the foregoing agreements, statements, instruments and other documents herein approved, authorized and confirmed which they may approve, and the execution or taking of such action shall be conclusive evidence of such necessity or advisability.

Section Nine. Effective Date. That this Ordinance shall take effect and be

in force after its publication as provided by law.

PASSED by the Council the 17 th day of June, 1996.

APPROVED by the Mayor the 17 th day of June, 1996.

(S E A L)

Marcia Rinehart

Marcia Rinehart, Mayor

ATTEST:

Martha Heizer

Martha Heizer, City Clerk

APPROVED FOR FORM:

R. S. Wetzler, City Attorney

WII-tnr126

ORD1587

Publication Fees: $83.26

The Legal Record
600 E. Santa Fe, Suite 4
Olathe, KS 66061-3700

CITY OF LEAWOOD
ATTN: MARTHA HEIZER
4800 TOWN CENTER DR
LEAWOOD, KS 66211

Proof of Publication

STATE OF KANSAS, JOHNSON COUNTY, SS;
Tammy Schwien, of lawful age, being first duly sworn, deposes and says that she is Legal Notices Administrator of The Legal Record which is a newspaper printed in the State of Kansas, published in and of general paid circulation on a weekly, monthly or yearly basis in Johnson County, Kansas, is not a trade, religious or fraternal publication, is published at least weekly fifty (50) times a year, has been so published continuously and uninterrupted in said County and State for a period of more than five (5) years prior to the first publication of the notice attached, and has been admitted at the post office as second class matter.
That a notice was published in all editions of the regular and entire issue for the following subject matter (also identified by the following case number, if any) for 1 consecutive week(s), as follows:

ORDINANCE NO. 1587--6/4/96

Tammy Schwien
Legal Notices Administrator

Subscribed and sworn to before me on this date:
June 19, 1996

Debra Dziadura
Notary Public

DEBRA DZIADURA
Notary Public - State of Kansas

My appointment expires: August 21, 1999.

$83.26

ORDINANCE NO. 1587

First published in The Legal Record, Tuesday, June 18, 1996.

ORDINANCE NO. 1587

AN ORDINANCE AUTHORIZING AND PROVIDING FOR THE ISSUANCE AND DELIVERY OF TEMPORARY NOTES, PROJECT 126 (MISSION ROAD, 95TH STREET-103RD STREET), OF THE CITY OF LEAWOOD, KANSAS, IN THE PRINCIPAL AMOUNT OF $100,000 TO PROVIDE TEMPORARY FINANCING OF THE COST OF IMPROVEMENT OR REIMPROVEMENT OF MISSION ROAD, 95TH STREET-103RD STREET, INCLUDING GRADING, REGRADING, CURBING, RECURBING, GUTTERING, REGUTTERING, PAVING, REPAVING, MACADAMIZING, REMACADAMIZING, CONSTRUCTING, RECONSTRUCTING, OPENING, WIDENING, EXTENDING, ROUNDING CORNERS, STRAIGHTENING, RELOCATING, CONSTRUCTION OR RECONSTRUCTION OF ANY NECESSARY BRIDGES AND APPROACHES THERETO, VIADUCTS, OVERPASSES, UNDERPASSES, CULVERTS, STORM DRAINAGE, TRAFFICWAY ILLUMINATION, TRAFFIC CONTROL DEVICES, PEDESTRIAN WAYS, BICYCLE WAYS OR OTHER IMPROVEMENTS AND OTHER INCIDENTAL CONSTRUCTION COSTS, IN THE CITY OF LEAWOOD.

WHEREAS, pursuant to K.S.A. 12-685, et seq., as amended, and Ordinance No. 1330, the Governing Body of the City of Leawood, Kansas (the "City") has heretofore authorized the following described improvement project within the City, to wit: Improvement of certain sections of Mission Road from 385 feet south of 95th Street to 385 feet south of 103rd Street within the City of Leawood (the "Project") at an estimated cost of $1,571,300; and

WHEREAS, the Project has been commenced and the City has heretofore issued its Temporary Notes, Project 126 (Mission Road, 95th Street-103rd Street), dated October 10, 1995, in the principal amount of $100,000 (the "Prior Notes") to provide funds to pay the costs of the Project heretofore incurred by the City and said Prior Notes become due and payable in the immediate future; and

WHEREAS, the City is authorized by law and in particular K.S.A. 10-123, as amended, to issue temporary notes of the City to provide funds to redeem and pay the Prior Notes as the same become due and payable.

NOW, THEREFORE, BE IT ORDAINED BY THE GOVERNING BODY OF THE CITY OF LEAWOOD, KANSAS, AS FOLLOWS:

Section One. Authorization of Notes. That in order to provide funds to redeem and pay the Prior Notes to become due in the immediate future there shall be issued and the City is hereby authorized to issue temporary notes of the City, designated City of Leawood, Kansas, Temporary Notes, Project 126 (Mission Road, 95th Street-103rd Street), in the aggregate principal amount of One Hundred Thousand Dollars ($100,000) (the "Notes"). The amount of the Notes together with other temporary notes heretofore issued to finance the Project which remain outstanding does not exceed the total estimated costs of said Project.

Section Two. Terms of the Notes. Said issue of Notes shall consist of bearer note number 1 in the denomination of $100,000. Each of said Notes shall be dated July 1, 1996, shall mature by their stated terms and become due and payable on March 20, 1997. The Notes shall bear interest from their dated date, payable at maturity or upon redemption prior thereto as herein provided, at a rate of interest of 4.20% per annum (computed on the basis of actual days elapsed and a 360-day year composed of twelve 30-day months). The Notes shall be subject to redemption at the option of the City upon notice as hereinafter provided and shall be redeemed and cancelled contemporaneously with the issuance of general obligation improvement bonds of the City issued in lieu thereof to provide permanent financing of the Project.

Both principal of and interest on said Notes shall be payable in lawful money of the United States of America by check or draft at the office of the City Treasurer of the City upon presentation and surrender of said Notes.

The City reserves the right to redeem and pay said Notes, in whole or in part (and if in part in denominations of $100,000 selected by the City in its sole discretion), at any date prior to the stated maturity of said Notes by notice thereof given in writing by first class mail to the original purchaser of the Notes and to any known holder of the Notes or by the publication of such notice at least one time in a newspaper published or of general circulation in the metropolitan Kansas City area, and payment of said Notes, such publication of such notice or mailing of written notification of redemption to the original purchaser and the known holder to be at least twenty days prior to the redemption date fixed in such notice. Notice of such redemption having been given as aforesaid, interest shall cease to accrue on said Notes from and after the redemption date.

Section Three. Security for the Notes. The full faith, credit and resources of the City of Leawood, Kansas, shall be and the same are hereby irrevocably pledged for the prompt payment of the principal of and interest on the Notes.

The Governing Body of the City shall make provisions for the payment of said Notes by the issuance of renewal notes or general obligation bonds of the City to provide permanent financing of the Project upon the completion thereof. If said bonds shall not be so issued and the Notes shall not be so paid, the Governing Body shall levy and collect a tax upon all taxable tangible property within the territorial limits of the City in an amount sufficient to pay the principal of and interest on said Notes as the same become due and payable.

Section Four. Form of Notes. Each of said Notes shall be in customary form as provided by law, shall be signed by the Mayor and attested by the City Clerk of the City and shall have the seal of said City affixed thereto.

Section Five. Execution and Delivery. The Mayor and City Clerk of the City are hereby authorized and directed to prepare and execute the Notes herein authorized in the form and substance hereinbefore described and as provided by law and to procure the proper registration in the office of the City Clerk and in the office of the Treasurer of the State of Kansas, and when so executed and registered, said Notes shall be countersigned by the City Clerk and delivered to Country Club Bank, the original purchaser thereof, upon payment of the purchase price therefor which shall not be less than 99.68% of the principal amount thereof plus accrued interest to the date of delivery thereof to the original purchaser thereof.

Section Six. Disposition of Proceeds. The proceeds of the sale of the Notes shall be deposited with the City Treasurer to be used to redeem and retire the Prior Notes.

Section Seven. Tax Covenants. The City covenants and agrees that (1) it will comply with each and every provision of Section 103 and Sections 141 through 150 of the Internal Revenue Code of 1986, as amended (the "Code"), that is or may become applicable to the Notes, necessary to maintain the exclusion from gross income for federal income tax purposes of the interest on the Notes, including but not limited to any provisions requiring the rebate of earnings on amounts held in funds or accounts created with respect to the Notes and (2) it will not use or permit the use of any of the proceeds of the Notes or other funds of the City nor take or permit any other action, or fail to take any action, if any such action or failure to act would adversely affect the exclusion from gross income for federal income tax purposes of the interest on the Notes; provided, however, the foregoing provision in (1) above shall be and become null and void if and to the extent that the City shall receive an opinion from nationally recognized bond counsel which concludes that compliance with the foregoing covenant and the provisions of the Code as provided in this section shall not be required to maintain and continue the tax-exempt status of the interest income on the Notes.

Section Eight. Further Authority. The duly elected and appointed officers of the City, including the Mayor, the City Clerk and the Finance Director, are hereby further authorized and directed to execute all documents and take such actions as they may deem necessary or advisable in order to carry out and perform the purposes of this Ordinance and to make ministerial alterations, changes or additions in the foregoing agreements, statements, instruments and other documents herein approved, authorized and confirmed which they may approve, and the execution or taking of such action shall be conclusive evidence of such necessity or advisability.

Section Nine. Effective Date. That this Ordinance shall take effect and be

CONTINUED ON PAGE 16

CONTINUED FROM PAGE 15

in force after its publication as provided by law.

PASSED by the Council the 17 th day of June, 1996.

APPROVED by the Mayor the 17 th day of June, 1996.

(S E A L)

ATTEST:

Marcia Rinehart, Mayor

Martha Heizer, City Clerk

APPROVED FOR FORM:

R. S. Wetzler, City Attorney

WII-tnr126

ORDINANCE NO. 1586

AN ORDINANCE AUTHORIZING AND PROVIDING FOR THE ISSUANCE AND DELIVERY OF TEMPORARY NOTES, PROJECT 124 (135TH STREET [K-150], STATE LINE-NALL AVENUE), OF THE CITY OF LEAWOOD, KANSAS, IN THE PRINCIPAL AMOUNT OF $2,900,000 TO PROVIDE TEMPORARY FINANCING OF THE COST OF CONSTRUCTION OF IMPROVEMENTS TO 135TH STREET (K-150), STATE LINE-NALL AVENUE, INCLUDING GRADING, REGRADING, CURBING, RECURBING, GUTTERING, REGUTTERING, PAVING, REPAVING, MACADAMIZING, REMACADAMIZING, CONSTRUCTING, RECONSTRUCTING, OPENING, WIDENING, EXTENDING, ROUNDING CORNERS, STRAIGHTENING, RELOCATING, CONSTRUCTION OR RECONSTRUCTION OF ANY NECESSARY BRIDGES, APPROACHES THERETO, VIADUCTS, OVERPASSES, UNDERPASSES, CULVERTS, STORM DRAINAGE, TRAFFICWAY ILLUMINATION, TRAFFIC CONTROL DEVICES, PEDESTRIAN WAYS, BICYCLE WAYS, OR OTHER IMPROVEMENTS OR ANY TWO OR MORE OF SUCH IMPROVEMENTS OR REIMPROVEMENTS AND OTHER INCIDENTAL CONSTRUCTION COSTS, IN THE CITY OF LEAWOOD.

WHEREAS, pursuant to K.S.A. 12-685, et seq., as amended, and Ordinance No. 1203, the Governing Body of the City of Leawood, Kansas (the "City") has heretofore authorized the following described improvement project within the City, to wit: the improvement and reimprovement of 135th Street (K-150) located within the City of Leawood (State Line-Nall Avenue) (the "Project") at an estimated cost of $4,959,851; and

WHEREAS, the Project has been commenced and the City has heretofore issued its Temporary Notes, Project 124 (135th Street (K-150), (State Line-Nall Avenue), dated October 10, 1995, in the principal amount of $1,400,000 and January 2, 1996 in the amount of $1,000,000 (the "Prior Notes") to provide funds to pay the costs of the Project heretofore incurred by the City, said Prior Notes to become due and payable in the immediate future, and the City has incurred or expects to incur additional costs payable with the next nine months in the amount of $500,000; and

WHEREAS, the City is authorized by law and in particular K.S.A. 10-123, as amended, to issue temporary notes of the City to pay the costs of the Project as the same become due and payable.

NOW, THEREFORE, BE IT ORDAINED BY THE GOVERNING BODY OF THE CITY OF LEAWOOD, KANSAS, AS FOLLOWS:

Section One. Authorization of Notes. That in order to provide funds to redeem and pay the costs of the project now due or to become due in the immediate future, including necessary engineering, legal and incidental costs, there shall be issued and the City is hereby authorized to issue temporary notes of the City, designated City of Leawood, Kansas, Temporary Notes, Project 124 (135th Street [K-150], State Line-Nall Avenue), in the aggregate principal amount of Two Million

Nine Hundred Thousand Dollars ($2,900,000) (the "Notes"). The amount of the Notes together with other temporary notes heretofore issued to finance the Project which remain outstanding does not exceed the total estimated costs of said Project.

Section Two. Terms of the Notes. Said issue of Notes shall consist of bearer notes numbered 1 through 29 inclusive, each in the denomination of $100,000. Each of said Notes shall be dated July 1, 1996, shall mature by their stated terms and become due and payable on March 20, 1997. The Notes shall bear interest from their dated date, payable at maturity or upon redemption prior thereto as herein provided, at a rate of interest of 4.15% per annum (computed on the basis of actual days elapsed and a 360-day year composed of twelve 30-day months). The Notes shall be subject to redemption at the option of the City upon notice as hereinafter provided and shall be redeemed and cancelled contemporaneously with the issuance of general obligation improvement bonds of the City issued in lieu thereof to provide permanent financing of the Project.

Both principal of and interest on said Notes shall be payable in lawful money of the United States of America by check or draft at the office of the City Treasurer of the City upon presentation and surrender of said Notes.

The City reserves the right to redeem and pay said Notes, in whole or in part (and if in part in denominations of $100,000 selected by the City in its sole discretion), at any date prior to the stated maturity of said Notes by notice thereof given in writing by first class mail to the original purchaser of the Notes and to any known holder of the Notes or by the publication of such notice at least one time in a newspaper published or of general circulation in the metropolitan Kansas City area, and payment of said Notes, such publication of such notice or mailing of written notification of redemption to the original purchaser and the known holder to be at least twenty days prior to the redemption date fixed in such notice. Notice of such redemption having been given as aforesaid, interest shall cease to accrue on said Notes from and after the redemption date.

Section Three. Security for the Notes. The full faith, credit and resources of the City of Leawood, Kansas, shall be and the same are hereby irrevocably pledged for the prompt payment of the principal of and interest on the Notes.

The Governing Body of the City shall make provisions for the payment of said Notes by the issuance of renewal notes or general obligation bonds of the City to provide permanent financing of the Project upon the completion thereof. If said bonds shall not be so issued and the Notes shall not be so paid, the Governing Body shall levy and collect a tax upon all taxable tangible property within the territorial limits of the City in an amount sufficient to pay the principal of and interest on said Notes as the same become due and payable.

Section Four. Form of Notes. Each of said Notes shall be in customary form as provided by law, shall be signed by the Mayor and attested by the City Clerk of the City and shall have the seal of said City affixed thereto.

Section Five. Execution and Delivery. The Mayor and City Clerk of the City are hereby authorized and directed to prepare and execute the Notes herein authorized in the form and substance hereinbefore described and as provided by law and to procure the proper registration in the office of the City Clerk and in the office of the Treasurer of the State of Kansas, and when so executed and registered, said Notes shall be countersigned by the City Clerk and delivered to United Missouri Bank, the original purchaser thereof, upon payment of the purchase price therefor which shall not be less than 99.538% of the principal amount thereof plus accrued interest to the date of delivery thereof to the original purchaser thereof.

Section Six. Disposition of Proceeds. The proceeds of the sale of said Notes shall be deposited with the City Treasurer, The sum of $2,400,000 of the proceeds shall be used to redeem and retire the Prior Notes, and the balance of such proceeds shall be deposited in a special fund created for the purpose of paying costs and expenses of the Project.

Section Seven. Tax Covenants. The City covenants and agrees that (1) it will comply with each and every provision of Section 103 and Sections 141 through 150 of the Internal Revenue Code of 1986, as amended (the "Code"), that is or may become applicable to the Notes, necessary to maintain the exclusion from gross income for federal income tax purposes of the interest on the Notes, including but not limited to any provisions requiring the rebate of earnings on amounts held in funds or accounts created with respect to the Notes and (2) it will not use or permit the use of any of the proceeds of the Notes or other funds of the City nor take or permit any other action, or fail to take any action, if any such action or failure to act would adversely affect the exclusion from gross income for federal income tax purposes of the interest on the Notes; provided, however, the foregoing provision in (1) above shall be and become null and void if and to the extent that the City shall receive an opinion from nationally recognized bond counsel which concludes that compliance with the foregoing covenant and the provisions of the Code as provided in this section shall not be required to maintain and continue the tax-exempt status of the interest income on the Notes.

Section Eight. Further Authority. The duly elected and appointed officers of the City, including the Mayor, the City Clerk and the Finance Director, are hereby further authorized and directed to execute all documents and take such actions as they may deem necessary or advisable in order to carry out and perform

the purposes of this Ordinance and to make ministerial alterations, changes or additions in the foregoing agreements, statements, instruments and other documents herein approved, authorized and confirmed which they may approve, and the execution or taking of such action shall be conclusive evidence of such necessity or advisability.

Section Nine. Effective Date. That this Ordinance shall take effect and be in force after its publication as provided by law.

PASSED by the Council the 17th day of June, 1996.

APPROVED by the Mayor the 17th day of June, 1996.

(S E A L)

Marcia Rinehart

Marcia Rinehart, Mayor

ATTEST:

Martha Heizer

Martha Heizer, City Clerk

APPROVED FOR FORM:

R. S. Wetzler, City Attorney

WII-tnnmo124

ORD1586

Publication Fees: $88.00

The Legal Record
600 E. Santa Fe, Suite 4
Olathe, KS 66061-3700

CITY OF LEAWOOD
ATTN: MARTHA HEIZER
4800 TOWN CENTER DR
LEAWOOD, KS 66211

Proof of Publication

STATE OF KANSAS, JOHNSON COUNTY, SS;
Tammy Schwien, of lawful age, being first duly sworn, deposes and says that she is Legal Notices Administrator of The Legal Record which is a newspaper printed in the State of Kansas, published in and of general paid circulation on a weekly, monthly or yearly basis in Johnson County, Kansas, is not a trade, religious or fraternal publication, is published at least weekly fifty (50) times a year, has been so published continuously and uninterrupted in said County and State for a period of more than five (5) years prior to the first publication of the notice attached, and has been admitted at the post office as second class matter.
That a notice was published in all editions of the regular and entire issue for the following subject matter (also identified by the following case number, if any) for 1 consecutive week(s), as follows:

ORDINANCE NO. 1586--6/4/96

Tammy Schwien
Legal Notices Administrator

Subscribed and sworn to before me on this date:
June 19, 1996

Debra Dziadura
Notary Public

DEBRA DZIADURA
Notary Public - State of Kansas

My appointment expires: August 21, 1999.

$88.00

ORDINANCE NO. 1586

First published in The Legal Record, Tuesday, June 18, 1996.

ORDINANCE NO. 1586

AN ORDINANCE AUTHORIZING AND PROVIDING FOR THE ISSUANCE AND DELIVERY OF TEMPORARY NOTES, PROJECT 124 (135TH STREET [K-150], STATE LINE-NALL AVENUE), OF THE CITY OF LEAWOOD, KANSAS, IN THE PRINCIPAL AMOUNT OF $2,900,000 TO PROVIDE TEMPORARY FINANCING OF THE COST OF CONSTRUCTION OF IMPROVEMENTS TO 135TH STREET (K-150), STATE LINE-NALL AVENUE, INCLUDING GRADING, REGRADING, CURBING, RECURBING, GUTTERING, REGUTTERING, PAVING, REPAVING, MACADAMIZING, REMACADAMIZING, CONSTRUCTING, RECONSTRUCTING, OPENING, WIDENING, EXTENDING, ROUNDING CORNERS, STRAIGHTENING, RELOCATING, CONSTRUCTION OR RECONSTRUCTION OF ANY NECESSARY BRIDGES, APPROACHES THERETO, VIADUCTS, OVERPASSES, UNDERPASSES, CULVERTS, STORM DRAINAGE, TRAFFICWAY ILLUMINATION, TRAFFIC CONTROL DEVICES, PEDESTRIAN WAYS, BICYCLE WAYS, OR OTHER IMPROVEMENTS OR ANY TWO OR MORE OF SUCH IMPROVEMENTS OR REIMPROVEMENTS AND OTHER INCIDENTAL CONSTRUCTION COSTS, IN THE CITY OF LEAWOOD.

WHEREAS, pursuant to K.S.A. 12-685, et seq., as amended, and Ordinance No. 1203, the Governing Body of the City of Leawood, Kansas (the "City") has heretofore authorized the following described improvement project within the City, to wit: the improvement and reimprovement of 135th Street (K-150) located within the City of Leawood (State Line-Nall Avenue) (the "Project") at an estimated cost of $4,959,851; and

WHEREAS, the Project has been commenced and the City has heretofore issued its Temporary Notes, Project 124 (135th Street (K-150), (State Line-Nall Avenue), dated October 10, 1995, in the principal amount of $1,400,000 and January 2, 1996 in the amount of $1,000,000 (the "Prior Notes") to provide funds to pay the costs of the Project heretofore incurred by the City, said Prior Notes to become due and payable in the immediate future, and the City has incurred or expects to incur additional costs payable with the next nine months in the amount of $500,000; and

WHEREAS, the City is authorized by law and in particular K.S.A. 10-123, as amended, to issue temporary notes of the City to pay the costs of the Project as the same become due and payable.

NOW, THEREFORE, BE IT ORDAINED BY THE GOVERNING BODY OF THE CITY OF LEAWOOD, KANSAS, AS FOLLOWS:

Section One. Authorization of Notes. That in order to provide funds to redeem and pay the costs of the project now due or to become due in the immediate future, including necessary engineering, legal and incidental costs, there shall be issued and the City is hereby authorized to issue temporary notes of the City, designated City of Leawood, Kansas, Temporary Notes, Project 124 (135th Street (K-150), State Line-Nall Avenue), in the aggregate principal amount of Two Million Nine Hundred Thousand Dollars ($2,900,000) (the "Notes"). The amount of the Notes together with other temporary notes heretofore issued to finance the Project which remain outstanding does not exceed the total estimated costs of said Project.

Section Two. Terms of the Notes. Said issue of Notes shall consist of bearer notes numbered 1 through 29 inclusive, each in the denomination of $100,000. Each of said Notes shall be dated July 1, 1996, shall mature by their stated terms and become due and payable on March 20, 1997. The Notes shall bear interest from their dated date, payable at maturity or upon redemption prior thereto as herein provided, at a rate of interest of 4.15% per annum (computed on the basis of actual days elapsed and a 360-day year composed of twelve 30-day months). The Notes shall be subject to redemption at the option of the City upon notice as hereinafter provided and shall be redeemed and cancelled contemporaneously with the issuance of general obligation improvement bonds of the City issued in lieu thereof to provide permanent financing of the Project.

Both principal of and interest on said Notes shall be payable in lawful money of the United States of America by check or draft at the office of the City Treasurer of the City upon presentation and surrender of said Notes.

The City reserves the right to redeem and pay said Notes, in whole or in part (and if in part in denominations of $100,000 selected by the City in its sole discretion), at any date prior to the stated maturity of said Notes by notice thereof given in writing by first class mail to the original purchaser of the Notes and to any known holder of the Notes or by the publication of such notice at least one time in a newspaper published or of general circulation in the metropolitan Kansas City area, and payment of said Notes, such publication of such notice or mailing of written notification of redemption to the original purchaser and the known holder to be at least twenty days prior to the redemption date fixed in such notice. Notice of such redemption having been given as aforesaid, interest shall cease to accrue on said Notes from and after the redemption date.

Section Three. Security for the Notes. The full faith, credit and resources of the City of Leawood, Kansas, shall be and the same are hereby irrevocably pledged for the prompt payment of the principal of and interest on the Notes.

The Governing Body of the City shall make provisions for the payment of said Notes by the issuance of renewal notes or general obligation bonds of the City to provide permanent financing of the Project upon the completion thereof. If said bonds shall not be so issued and the Notes shall not be so paid, the Governing Body shall levy and collect a tax upon all taxable tangible property within the territorial limits of the City in an amount sufficient to pay the principal of and interest on said Notes as the same become due and payable.

Section Four. Form of Notes. Each of said Notes shall be in customary form as provided by law, shall be signed by the Mayor and attested by the City Clerk of the City and shall have the seal of said City affixed thereto.

Section Five. Execution and Delivery. The Mayor and City Clerk of the City are hereby authorized and directed to prepare and execute the Notes herein authorized in the form and substance hereinbefore described and as provided by law and to procure the proper registration in the office of the City Clerk and in the office of the Treasurer of the State of Kansas, and when so executed and registered, said Notes shall be countersigned by the City Clerk and delivered to United Missouri Bank, the original purchaser thereof, upon payment of the purchase

CONTINUED ON PAGE 18

CONTINUED FROM PAGE 17

price therefor which shall not be less than 99.538% of the principal amount thereof plus accrued interest to the date of delivery thereof to the original purchaser thereof.

Section Six. Disposition of Proceeds. The proceeds of the sale of said Notes shall be deposited with the City Treasurer. The sum of $2,400,000 of the proceeds shall be used to redeem and retire the Prior Notes, and the balance of such proceeds shall be deposited in a special fund created for the purpose of paying costs and expenses of the Project.

Section Seven. Tax Covenants. The City covenants and agrees that (1) it will comply with each and every provision of Section 103 and Sections 141 through 150 of the Internal Revenue Code of 1986, as amended (the "Code"), that is or may become applicable to the Notes, necessary to maintain the exclusion from gross income for federal income tax purposes of the interest on the Notes, including but not limited to any provisions requiring the rebate of earnings on amounts held in funds or accounts created with respect to the Notes and (2) it will not use or permit the use of any of the proceeds of the Notes or other funds of the City nor take or permit any other action, or fail to take any action, if any such action or failure to act would adversely affect the exclusion from gross income for federal income tax purposes of the interest on the Notes; provided, however, the foregoing provision in (1) above shall be and become null and void if and to the extent that the City shall receive an opinion from nationally recognized bond counsel which concludes that compliance with the foregoing covenant and the provisions of the Code as provided in this section shall not be required to maintain and continue the tax-exempt status of the interest income on the Notes.

Section Eight. Further Authority. The duly elected and appointed officers of the City, including the Mayor, the City Clerk and the Finance Director, are hereby further authorized and directed to execute all documents and take such actions as they may deem necessary or advisable in order to carry out and perform the purposes of this Ordinance and to make ministerial alterations, changes or additions in the foregoing agreements, statements, instruments and other documents herein approved, authorized and confirmed which they may approve, and the execution or taking of such action shall be conclusive evidence of such necessity or advisability.

Section Nine. Effective Date. That this Ordinance shall take effect and be in force after its publication as provided by law.

PASSED by the Council the 17 th day of June, 1996.

APPROVED by the Mayor the 17 th day of June, 1996.

(S E A L)

ATTEST:

Marcia Rinehart, Mayor

Martha Heizer, City Clerk

APPROVED FOR FORM:

R. S. Wetzler, City Attorney

WII-tnnmo124

ORDINANCE NO. 1585

AN ORDINANCE AUTHORIZING AND PROVIDING FOR THE VACATION OF UTILITY EASEMENTS SHOWN ON THE PLAT OF WHITEHORSE, PLAT 1.

Be it ordained by the Governing Body of the City of Leawood:

Section 1. That the City of Leawood hereby vacates the easements covering the following described property granted to the City of Leawood by Plat recorded in Plat Book 87, Page 10:

Vacation of 15 foot utility easement along the common lot line of Lots 1 and 2, Block 1, except the Northerly 10 feet and the Southerly 12 feet thereof, and the 15 foot utility Easement between Lots 1 and 2, Block 3, except the South 7 1/2 feet thereof, all in Whitehorse, Plat 1.a subdivision of land now in the City of Leawood, Johnson County, Kansas.

Section 2. That the vacated easements will revert to the owners of the real estate adjacent on each side in proportion to the frontage of such real estate unless the land was originally taken in different proportions in which case it will revert in the proportions the lots were taken.

Section 3. That the City Clerk shall file a certified copy of this ordinance with the County Clerk and the Register of Deeds of Johnson County, Kansas, after the ordinance becomes effective.

Section 4. That this ordinance shall take effect and be in force thirty (30) days from and after its publication in the official City newspaper.

Passed by the Council the 17th day of June, 1996.

Approved by the Mayor the 17th day of June, 1996.

(S E A L)

Marcia Rinehart
Marcia Rinehart Mayor

Attest:

Fran Kessler
Fran Kessler Acting City Clerk

APPROVED FOR FORM:
R.S. Wetzler City Attorney

City of Leawood

4800 Town Center Drive • Leawood, Kansas 66211 • (913) 339-6700
(913) 339- 6781 Fax
(913) 339-6225 TDD

cc of ord. to PW's + Planning 8/7/96

August 7, 1996

TO: Beverly L. Baker, County Clerk
Sara Ullmann, Register of Deeds

FROM: Martha Heizer, City Clerk

Enclosed is a certified copy of Ordinance No. 1585 to be filed in your office in accordance with Section 3 of the ordinance. The ordinance took effect July 19, 1996.

Sincerely,

Martha Heizer

Martha Heizer
City Clerk

2624785

ORDINANCE NO. 1585

AN ORDINANCE AUTHORIZING AND PROVIDING FOR THE VACATION OF UTILITY EASEMENTS SHOWN ON THE PLAT OF WHITEHORSE, PLAT 1.

Be it ordained by the Governing Body of the City of Leawood:

Section 1. That the City of Leawood hereby vacates the easements covering the following described property granted to the City of Leawood by Plat recorded in Plat Book 87, Page 10:

Vacation of 15 foot utility easement along the common lot line of Lots 1 and 2, Block 1, except the Northerly 10 feet and the Southerly 12 feet thereof, and the 15 foot utility Easement between Lots 1 and 2, Block 3, except the South 7 1/2 feet thereof, all in Whitehorse, Plat 1.a subdivision of land now in the City of Leawood, Johnson County, Kansas.

Section 2. That the vacated easements will revert to the owners of the real estate adjacent on each side in proportion to the frontage of such real estate unless the land was originally taken in different proportions in which case it will revert in the proportions the lots were taken.

Section 3. That the City Clerk shall file a certified copy of this ordinance with the County Clerk and the Register of Deeds of Johnson County, Kansas, after the ordinance becomes effective.

Section 4. That this ordinance shall take effect and be in force thirty (30) days from and after its publication in the official City newspaper.

Passed by the Council the 17th day of June, 1996.

Approved by the Mayor the 17th day of June, 1996.

(S E A L)

Marcia Rinehart
Marcia Rinehart Mayor

Attest:

Fran Kessler
Fran Kessler Acting City Clerk

APPROVED FOR FORM:

R. S. Wetzler City Attorney

STATE OF KANSAS
COUNTY OF JOHNSON ss
FILED FOR RECORD

96 AUG -9 A 10: 55 .0

SARA F. ULLMANN
REGISTER OF DEEDS

no chg

no chg

BOOK 4957 PAGE 888

CERTIFICATE

State of Kansas
County of Johnson
City of Leawood

I, Martha Heizer, City Clerk of the City of Leawood, Kansas, hereby certify that the attached is a true and correct copy of Ordinance No. 1585 as the same appears in my office.

In testimony whereof, I have hereunto signed my name and affixed the seal of said city this 7th day of August, 1996.

(S E A L)

Martha Heizer

Martha Heizer, City Clerk

ORIGINAL COMPARED WITH RECORD

Ret - City of Leawood
4800 Town Center Drive
Leawood, Ks. 66211

ORD1585

Publication Fees: $17.33

The Legal Record
600 E. Santa Fe, Suite 4
Olathe, KS 66061-3700

CITY OF LEAWOOD
ATTN: MARTHA HEIZER
4800 TOWN CENTER DR
LEAWOOD, KS 66211

Proof of Publication

STATE OF KANSAS, JOHNSON COUNTY, SS;
Tammy Schwien, of lawful age, being first duly sworn, deposes and says that she is Legal Notices Administrator of The Legal Record which is a newspaper printed in the State of Kansas, published in and of general paid circulation on a weekly, monthly or yearly basis in Johnson County, Kansas, is not a trade, religious or fraternal publication, is published at least weekly fifty (50) times a year, has been so published continuously and uninterrupted in said County and State for a period of more than five (5) years prior to the first publication of the notice attached, and has been admitted at the post office as second class matter.
That a notice was published in all editions of the regular and entire issue for the following subject matter (also identified by the following case number, if any) for 1 consecutive week(s), as follows:

ORDINANCE NO. 1585--6/4/96

Tammy Schwien
Legal Notices Administrator

Subscribed and sworn to before me on this date:
June 19, 1996

Debra Dziadura
Notary Public

DEBRA DZIADURA
Notary Public - State of Kansas

My appointment expires: August 21, 1999.

ORDINANCE NO. 1585
First published in The Legal Record, Tuesday, June 18, 1996.

ORDINANCE NO. 1585

AN ORDINANCE AUTHORIZING AND PROVIDING FOR THE VACATION OF UTILITY EASEMENTS SHOWN ON THE PLAT OF WHITEHORSE, PLAT 1.

Be it ordained by the Governing Body of the City of Leawood:

Section 1. That the City of Leawood hereby vacates the easements covering the following described property granted to the City of Leawood by Plat recorded in Plat Book 87, Page 10:

Vacation of 15 foot utility easement along the common lot line of Lots 1 and 2, Block 1, except the Northerly 10 feet and the Southerly 12 feet thereof, and the 15 foot utility easement between Lots 1 and 2, Block 3, except the South 7 1/2 feet thereof, all in Whitehorse, Plat 1,a subdivision of land now in the City of Leawood, Johnson County, Kansas.

Section 2. That the vacated easements will revert to the owners of the real estate adjacent on each side in proportion to the frontage of such real estate unless the land was originally taken in different proportions in which case it will revert in the proportions the lots were taken.

Section 3. That the City Clerk shall file a certified copy of this ordinance with the County Clerk and the Register of Deeds of Johnson County, Kansas, after the ordinance becomes effective.

Section 4. That this ordinance shall take effect and be in force thirty (30) days from and after its publication in the official City newspaper.

Passed by the Council the 17th day of June, 1996.

Approved by the Mayor the 17th day of June, 1996.

Marcia Rinehart
Mayor

(S E A L)

Attest: Fran Kessler
Fran Kessler
Acting City Clerk

APPROVED FOR FORM: R.S. Moeller
City Attorney

$17.33

ORDINANCE NO. 1584

AN ORDINANCE REZONING PROPERTY (RESERVE AT IRONHORSE) LOCATED AT 151ST & MISSION ROAD FROM AG (AGRICULTURAL) TO RP-1 (PLANNED SINGLE FAMILY RESIDENTIAL) ; DIRECTING AMENDMENT OF THE OFFICIAL ZONING MAP OF THE CITY OF LEAWOOD, KANSAS; AND REINCORPORATING SAID ZONING MAP.

Be it ordained by the Governing Body of the City of Leawood:

Section 1. Rezoning of Property. That the real estate hereinafter described, to wit:

Tract 1 A part of Lot Thirty-One (31), Mastin Gardens, a subdivision in the City of Overland Park, Johnson County, Kansas, (now vacated) and a part of the Northerly 50.0 feet of right of way of the St. Louis San Francisco Railway Co., as same was formerly located and constructed over and across the Northwest Quarter (NW1/4) of the Northeast Quarter (NE1/4) of Section Ten (10), Township Fourteen (14), Range Twenty-Five (25), said strip or parcel lying South (S) of and adjoining said Lot Thirty-One (31), described as follows: Beginning at a point on the North line of said Lot Thirty-One (31), which is 156.30 feet East (E) of the Northwest (NW) corner thereof; thence East (E) along the North (N) line of said Lot Thirty-One (31), 90.0 feet; thence South (S), parallel with the West (W) line of said Lot Thirty-One (31), 204.91 feet to a point on the center line of said Railway, thence West 90.61 feet; thence North, parallel with the West line of said Lot Thirty-One (31), 215.34 feet to the point of beginning, except that part in streets or roads.
Tract 2 A part of the Northwest Quarter of the Northeast Quarter of Section 10, Township 14, Range 25, in Overland Park, Johnson County, Kansas, described as follows: Beginning at the Northwest corner of Lot 31, Mastin Gardens, a subdivision (now vacated) thence East along the North line of said Lot 31 a distance of 145.30 feet; thence South, parallel with the West line of said Lot 31, a distance of 215.34 feet to the center line of said St. Louis, San Francisco Railway Co. right of way, now abandoned, thence Southwesterly along the center line of said railway 157.36 feet to its intersection with the prolongation South of the West line of said Lot 31; thence North and along the West line of said Lot 31, a distance of 233.46 feet to the Point of Beginning, except that part in streets or roads. Containing approx. two acres.

now zoned AG, is hereby rezoned to RP-1.

Section 2. Official Zoning Map Amended. That the Director of Planning and Development of the City of Leawood, Kansas, is hereby directed to amend the Official Zoning Map of the City in accordance with the above and foregoing changes in zoning.

Section 3. Reincorporation of Official Zoning Map as Amended. That the Official Zoning Map of the City, as amended by the provisions of this ordinance, is hereby reincorporated and declared to be the Official Zoning Map of the City.

Section 4. Take Effect. That this ordinance shall take effect and be in force from and after its publication in the official City newspaper.

Passed by the Council the 17th day of June, 1996.

Approved by the Mayor the 17th day of June, 1996.

(S E A L)

Marcia Rinehart
Marcia Rinehart Mayor

Attest:

Fran Kessler
Fran Kessler Acting City Clerk

APPROVED FOR FORM:
R.S. Wetzler City Attorney

ORD1584

Publication Fees: $29.50

The Legal Record
600 E. Santa Fe, Suite 4
Olathe, KS 66061-3700

CITY OF LEAWOOD
ATTN: MARTHA HEIZER
4800 TOWN CENTER DR
LEAWOOD, KS 66211

Proof of Publication

STATE OF KANSAS, JOHNSON COUNTY, SS;
Tammy Schwien, of lawful age, being first duly sworn, deposes and says that she is Legal Notices Administrator of The Legal Record which is a newspaper printed in the State of Kansas, published in and of general paid circulation on a weekly, monthly or yearly basis in Johnson County, Kansas, is not a trade, religious or fraternal publication, is published at least weekly fifty (50) times a year, has been so published continuously and uninterrupted in said County and State for a period of more than five (5) years prior to the first publication of the notice attached, and has been admitted at the post office as second class matter.
That a notice was published in all editions of the regular and entire issue for the following subject matter (also identified by the following case number, if any) for 1 consecutive week(s), as follows:

ORDINANCE NO. 1584--6/4/96

Tammy Schwien
Legal Notices Administrator

Subscribed and sworn to before me on this date:
June 19, 1996

Debra Dziadura
Notary Public

DEBRA DZIADURA
Notary Public - State of Kansas

My appointment expires: August 21, 1999.

ORDINANCE NO. 1584

First published in The Legal Record, Tuesday, June 18, 1996.

ORDINANCE NO. 1584

AN ORDINANCE REZONING PROPERTY (RESERVE AT IRONHORSE) LOCATED AT 151ST & MISSION ROAD FROM AG (AGRICULTURAL) TO RP-1 (PLANNED SINGLE FAMILY RESIDENTIAL) ; DIRECTING AMENDMENT OF THE OFFICIAL ZONING MAP OF THE CITY OF LEAWOOD, KANSAS; AND REINCORPORATING SAID ZONING MAP.

Be it ordained by the Governing Body of the City of Leawood:

Section 1. Rezoning of Property. That the real estate hereinafter described, to wit:

Tract 1 A part of Lot Thirty-One (31), Mastin Gardens, a subdivision in the City of Overland Park, Johnson County, Kansas, (now vacated) and a part of the Northerly 50.0 feet of right of way of the St. Louis San Francisco Railway Co., as same was formerly located and constructed over and across the Northwest Quarter (NW1/4) of the Northeast Quarter (NE1/4) of Section Ten (10), Township Fourteen (14), Range Twenty-Five (25), said strip or parcel lying South (S) of and adjoining said Lot Thirty-One (31), described as follows: Beginning at a point on the North line of said Lot Thirty-One (31), which is 156.30 feet East (E) of the Northwest (NW) corner thereof; thence East (E) along the North (N) line of said Lot Thirty-One (31), 90.0 feet; thence South (S), parallel with the West (W) line of said Lot Thirty-One (31), 204.91 feet to a point on the center line of said Railway, thence West 90.61 feet; thence North, parallel with the West line of said Lot Thirty-One (31), 215.34 feet to the point of beginning, except that part in streets or roads.
Tract 2 A part of the Northwest Quarter of the Northeast Quarter of Section 10, Township 14, Range 25, in Overland Park, Johnson County, Kansas, described as follows: Beginning at the Northwest corner of Lot 31, Mastin Gardens, a subdivision (now vacated) thence East along the North line of said Lot 31 a distance of 145.30 feet; thence South, parallel with the West line of said Lot 31, a distance of 215.34 feet to the center line of said St. Louis, San Francisco Railway Co. right of way, now abandoned, thence Southwesterly along the center line of said railway 157.36 feet to its intersection with the prolongation South of the West line of said Lot 31; thence North and along the West line of said Lot 31, a distance of 233.46 feet to the Point of Beginning, except that part in streets or roads. Containing approx. two acres.

now zoned AG, is hereby rezoned to RP-1.

Section 2. Official Zoning Map Amended. That the Director of Planning and Development of the City of Leawood, Kansas, is hereby directed to amend the Official Zoning Map of the City in accordance with the above and foregoing changes in zoning.

Section 3. Reincorporation of Official Zoning Map as Amended. That the Official Zoning Map of the City, as amended by the provisions of this ordinance, is hereby reincorporated and declared to be the Official Zoning Map of the City.

Section 4. Take Effect. That this ordinance shall take effect and be in force from and after its publication in the official City newspaper.

Passed by the Council the 17th day of June, 1996.

Approved by the Mayor the 17th day of June, 1996.

(S E A L)

Marcia Rinehart Mayor

Attest:

Fran Kessler Acting City Clerk

APPROVED FOR FORM:

R. S. Wetzler City Attorney

NOTE:
Effective 6/4/96 - The entire existing Sec. 14-104 should have been amended to include the new addition of "14-104(d)" with repeal of the existing ~~14-104.~~ The intent of the ord. is to add the new info: (d).
Martha Heizer, City Clerk
6/25/96

ORDINANCE NO. 1583 C Emk

AN ORDINANCE AMENDING SECTION 14-104 OF THE CODE OF THE CITY OF LEAWOOD RELATING TO TRAFFIC REGULATIONS~~, AND REPEALING EXISTING SECTION.~~

Be it ordained by the Governing Body of the City of Leawood.

Section 1. Code Amended. That Section 14-104 of the Code of the City of Leawood is hereby amended to read as follows:

14-104(d) The operation of such devices is prohibited at City Hall and the Johnson County Public Library-Leawood Pioneer Branch. added to existing 14-104

~~Section 2. Repeal of Existing Section. That existing Section 14-104 of the Code of the City of Leawood is hereby repealed. (Prior law: Ord. No. 1428C)~~

Section 3. Take Effect. That this ordinance shall take effect and be in force from and after its publication in the official City newspaper.

Passed by the Council the 3rd day of June, 1996.

Approved by the Mayor the 3rd day of June, 1996.

(S E A L)

Marcia Rinehart

Marcia Rinehart Mayor

Attest:

Fran Kessler

Fran Kessler Acting City Clerk

APPROVED FOR FORM:

R. S. Wetzler City Attorney

ORDINANCE NO. 1583 C

AN ORDINANCE AMENDING SECTION 14-104 OF THE CODE OF THE CITY OF LEAWOOD RELATING TO TRAFFIC REGULATIONS, AND REPEALING EXISTING SECTION.

Be it ordained by the Governing Body of the City of Leawood.

Section 1. Code Amended. That Section 14-104 of the Code of the City of Leawood is hereby amended to read as follows:

14-104(d). The operation of such devices is prohibited at City Hall and the Johnson County Public Library-Leawood Pioneer Branch.

Section 2. Repeal of Existing Section. That existing Section 14-104 of the Code of the City of Leawood is hereby repealed. (Prior law: Ord. No. 1428C)

Section 3. Take Effect. That this ordinance shall take effect and be in force from and after its publication in the official City newspaper.

Passed by the Council the 3rd day of June, 1996.

Approved by the Mayor the 3rd day of June, 1996.

(S E A L)

Marcia Rinehart

Marcia Rinehart Mayor

Attest:

Fran Kessler

Fran Kessler Acting City Clerk

APPROVED FOR FORM:

R. S. Wetzler City Attorney

ORD1583

Publication Fees: $15.27

The Legal Record
600 E. Santa Fe, Suite 4
Olathe, KS 66061-3700

CITY OF LEAWOOD
ATTN: MARTHA HEIZER
4800 TOWN CENTER DR
LEAWOOD, KS 66211

Proof of Publication

STATE OF KANSAS, JOHNSON COUNTY, SS;
Tammy Schwien, of lawful age, being first duly sworn, deposes and says that she is Legal Notices Administrator of The Legal Record which is a newspaper printed in the State of Kansas, published in and of general paid circulation on a weekly, monthly or yearly basis in Johnson County, Kansas, is not a trade, religious or fraternal publication, is published at least weekly fifty (50) times a year, has been so published continuously and uninterrupted in said County and State for a period of more than five (5) years prior to the first publication of the notice attached, and has been admitted at the post office as second class matter.
That a notice was published in all editions of the regular and entire issue for the following subject matter (also identified by the following case number, if any) for 1 consecutive week(s), as follows:

ORDINANCE NO. 1583--6/4/96

Tammy Schwien
Legal Notices Administrator

Subscribed and sworn to before me on this date:
JUNE 5, 1996

Debra Dziadura
Notary Public

DEBRA DZIADURA
Notary Public - State of Kansas

My appointment expires: August 21, 1999.

ORDINANCE NO. 1583

First published in The Legal Record, Tuesday, June 4, 1996.

ORDINANCE NO. 1583

AN ORDINANCE AMENDING SECTION 14-104 OF THE CODE OF THE CITY OF LEAWOOD RELATING TO TRAFFIC REGULATIONS, AND REPEALING EXISTING SECTION.

Be it ordained by the Governing Body of the City of Leawood.

Section 1. Code Amended. That Section 14-104 of the Code of the City of Leawood is hereby amended to read as follows:

14-104(d). The operation of such devices is prohibited at City Hall and the Johnson County Public Library-Leawood Pioneer Branch.

Section 2. Repeal of Existing Section. That existing Section 14-104 of the Code of the City of Leawood is hereby repealed. (Prior law: Ord. No. 1428C)

Section 3. Take Effect. That this ordinance shall take effect and be in force from and after its publication in the official City newspaper.

Passed by the Council the 3rd day of June, 1996.

Approved by the Mayor the 3rd day of June, 1996.

(S E A L)

Marcia Rinehart
Marcia Rinehart Mayor

Attest:

Fran Kessler
Fran Kessler Acting City Clerk

APPROVED FOR FORM:
R. S. Wetzler City Attorney

$15.27

ORDINANCE NO. 1582

AN ORDINANCE ACCEPTING KANSAS SPECIAL WARRANTY DEED FOR PROPOSED LAND TRANSFER TO CITY OF LEAWOOD ABOUT MISSION ROAD AND 151ST STREET.

Be it ordained by the Governing Body of the City of Leawood:

Section 1. That the City of Leawood hereby accepts one deed for described land as follows, to wit:

From Evelyn M. Rose and Kahl R. Monahan: All that part of the North 50 acres of the NW1/4 of Section 10, Township 14, Range 25, now in the City of Leawood, Johnson County, Kansas, more particularly described as follows: Commencing at the Northwest corner of the NW1/4 of said Section 10; thence S2° 04' 56"E, along the West line of the NW1/4 of said Section 10, a distance of 784.71 feet; thence N85° 32'33"E, a distance of 335.73 feet; thence N77° 58' 31"E, a distance of 108.65 feet, to the true point of beginning of subject tract; thence N46° 19' 17"E, a distance of 41.63 feet; thence N54° 07' 10"E, a distance of 174.51 feet, to point "A"; thence S 52° 35' 07"W, a distance of 215.83 feet, to the true point of beginning of subject tract...and also...all that part of the North 50 acres of the NW1/4 of said Section 10, more particularly described as follows: Beginning at said point "A"; N36° 38' 27"E, a distance of 120.94 feet; thence N82° 03' 04"E, a distance of 194.18 feet; thence S87° 12' 25"E, a distance of 95.23 feet; thence S80° 37' 59"W, a distance of 46.09 feet; thence S78° 03' 34"W, a distance of 237.70 feet; thence S52° 35' 07"W, a distance of 102.81 feet, to the point of beginning.
The above described tracts of land contain 8,706 sq. ft., more or less, equal to 0.200 acres, more or less.

Section 2. That a copy of said deed is attached hereto and thereby incorporated by reference.

Section 3. That this ordinance shall take effect and be in force from and after its publication in the official City newspaper.

Passed by the Council the 3rd day of June, 1996.

Approved by the Mayor the 3rd day of June, 1996.

(S E A L)

Marcia Rinehart
Marcia Rinehart Mayor

Attest:

Fran Kessler

Fran Kessler Acting City Clerk

APPROVED FOR FORM:

R.S. Wetzler City Attorney

ORD1582

Publication Fees: $19.09

The Legal Record
600 E. Santa Fe, Suite 4
Olathe, KS 66061-3700

CITY OF LEAWOOD
ATTN: MARTHA HEIZER
4800 TOWN CENTER DR
LEAWOOD, KS 66211

Proof of Publication

STATE OF KANSAS, JOHNSON COUNTY, SS;
Tammy Schwien, of lawful age, being first duly sworn, deposes and says that she is Legal Notices Administrator of The Legal Record which is a newspaper printed in the State of Kansas, published in and of general paid circulation on a weekly, monthly or yearly basis in Johnson County, Kansas, is not a trade, religious or fraternal publication, is published at least weekly fifty (50) times a year, has been so published continuously and uninterrupted in said County and State for a period of more than five (5) years prior to the first publication of the notice attached, and has been admitted at the post office as second class matter.
That a notice was published in all editions of the regular and *entire issue for the following subject matter (also identified by* the following case number, if any) for 1 consecutive week(s), as follows:

ORDINANCE NO. 1582--6/4/96

Tammy Schwien
Legal Notices Administrator

Subscribed and sworn to before me on this date:
JUNE 5, 1996

Debra Dziadura
Notary Public

DEBRA DZIADURA
Notary Public - State of Kansas

My appointment expires: August 21, 1999.

ORDINANCE NO. 1582

First published in The Legal Record, Tuesday, June 4, 1996.

ORDINANCE NO. 1582.

AN ORDINANCE ACCEPTING KANSAS SPECIAL WARRANTY DEED FOR PROPOSED LAND TRANSFER TO CITY OF LEAWOOD ABOUT MISSION ROAD AND 151ST STREET.

Be it ordained by the Governing Body of the City of Leawood:

Section 1. That the City of Leawood hereby accepts one deed for described land as follows, to wit:

From Evelyn M. Rose and Kahl R. Monahan: All that part of the North 50 acres of the NW1/4 of Section 10, Township 14, Range 25, now in the City of Leawood, Johnson County, Kansas, more particularly described as follows: Commencing at the Northwest corner of the NW1/4 of said Section 10; thence S2° 04' 56"E, along the West line of the NW1/4 of said Section 10, a distance of 784.71 feet; thence N85° 32' 33"E, a distance of 335.73 feet; thence N77° 58' 31"E, a distance of 108.65 feet, to the true point of beginning of subject tract; thence N45° 19' 17"E, a distance of 41.63 feet; thence N54° 07' 10"E, a distance of 174.51 feet, to point "A"; thence S 52° 35' 07"W, a distance of 215.83 feet, to the true point of beginning of subject tract...and also...all that part of the North 50 acres of the NW1/4 of said Section 10, more particularly described as follows: Beginning at said point "A"; N36° 38' 27"E, a distance of 120.94 feet; thence N82° 03' 04"E, a distance of 194.18 feet; thence S87° 12' 25"E, a distance of 95.23 feet; thence S80° 37' 59"W, a distance of 46.09 feet; thence S78° 03' 34"W, a distance of 237.70 feet; thence S52° 35' 07"W, a distance of 102.81 feet, to the point of beginning.
The above described tracts of land contain 8,706 sq ft., more or less, equal to 0.200 acres, more or less.

Section 2. That a copy of said deed is attached hereto and thereby incorporated by reference.

Section 3. That this ordinance shall take effect and be in force from and after its publication in the official City newspaper.

Passed by the Council the 3rd day of June 1996.

Approved by the Mayor the 3rd day of June 1996.

(S E A L)

Marcia Rinehart
Marcia Rinehart Mayor

Attest:

Fran Kessler
Fran Kessler Acting City Clerk

APPROVED FOR FORM:
R.S. Wetzler
City Attorney

$19.09

ORDINANCE NO. 1581

AN ORDINANCE ACCEPTING DEEDS OF DEDICATION FOR PUBLIC RIGHT-OF-WAY REQUIRED FOR MISSION ROAD IMPROVEMENTS FROM APPROXIMATELY 146TH STREET TO 148TH STREET.

Be it ordained by the Governing Body of the City of Leawood:

Section 1. That the City of Leawood hereby accepts 2 deeds for right-of-way described as follows, to wit:

From Merlyn P. McMorris and Larry D. Parsons: All of the West 50 feet of the N1/4 of the W1/2 of the NW1/4 of the SW1/4 of Section 3, Township 14, Range 25, now in the City of Leawood, Johnson County, Kansas, all subject to that part thereof dedicated for street purposes.

AND

All of the West 50 feet of the S1/4 of the W1/2 of the NW1/4 of the SW1/4 of Section 3, Township 14, Range 25, now in the City of Leawood, Johnson County, Kansas, all subject to that part thereof dedicated for street purposes.

Section 2. That copies of said deeds are attached hereto and thereby incorporated by reference.

Section 3. That this ordinance shall take effect and be in force from and after its publication in the official City newspaper.

Passed by the Council the 20th day of May, 1996.

Approved by the Mayor the 20th day of May, 1996.

(S E A L)

Marcia Rinehart
Marcia Rinehart Mayor

Attest:

Martha Heizer
Martha Heizer City Clerk

APPROVED FOR FORM:
R.S. Swetzler City Attorney

ORD1581

Publication Fees: $16.73

The Legal Record
600 E. Santa Fe, Suite 4
Olathe, KS 66061-3700

CITY OF LEAWOOD
ATTN: MARTHA HEIZER
4800 TOWN CENTER DR
LEAWOOD, KS 66211

Proof of Publication

STATE OF KANSAS, JOHNSON COUNTY, SS;

Tammy Schwien, of lawful age, being first duly sworn, deposes and says that she is Legal Notices Administrator of The Legal Record which is a newspaper printed in the State of Kansas, published in and of general paid circulation on a weekly, monthly or yearly basis in Johnson County, Kansas, is not a trade, religious or fraternal publication, is published at least weekly fifty (50) times a year, has been so published continuously and uninterrupted in said County and State for a period of more than five (5) years prior to the first publication of the notice attached, and has been admitted at the post office as second class matter.

That a notice was published in all editions of the regular and entire issue for the following subject matter (also identified by the following case number, if any) for 1 consecutive week(s), as follows:

ORDINANCE NO. 1581--5/21/96

Tammy Schwien
Legal Notices Administrator

Subscribed and sworn to before me on this date:

MAY 22, 1996

Debra Dziadura
Notary Public

DEBRA DZIADURA
Notary Public - State of Kansas

My appointment expires: August 21, 1999.

ORDINANCE NO. 1581

First published in The Legal Record, Tuesday, May 21, 1996.

ORDINANCE NO. 1581

AN ORDINANCE ACCEPTING DEEDS OF DEDICATION FOR PUBLIC RIGHT-OF-WAY REQUIRED FOR MISSION ROAD IMPROVEMENTS FROM APPROXIMATELY 146TH STREET TO 148TH STREET.

~~Be it~~ Ordained by the Governing Body of the City of Leawood:

Section 1. That the City of Leawood hereby accepts 2 deeds for right-of-way described as follows, to wit:

From Merlyn P. McMorris and Larry D. Parsons: All of the West 50 feet of the N1/4 of the W1/2 of the NW1/4 of the SW1/4 of Section 3, Township 14, Range 25, now in the City of Leawood, Johnson County, Kansas, all subject to that part thereof dedicated for street purposes.

AND

All of the West 50 feet of the S1/4 of the W1/2 of the NW1/4 of the SW1/4 of Section 3, Township 14, Range 25, now in the City of Leawood, Johnson County, Kansas, all subject to that part thereof dedicated for street purposes.

Section 2: That copies of said deeds are attached hereto and thereby incorporated by reference.

Section 3. That this ordinance shall take effect and be in force from and after its publication in the official City newspaper.

Passed by the Council the 20th day of May, 1996.

Approved by the Mayor the 20th day of May, 1996.

(S E A L)

Marcia Rinehart
Mayor

Attest:

Martha Heizer
City Clerk

APPROVED FOR FORM:

R.S. Swetzler
City Attorney

$16.73

ORDINANCE NO. 1580

AN ORDINANCE AUTHORIZING THE IMPROVEMENT OF THE CITY OF LEAWOOD, KANSAS CITY HALL ; PROVIDING FOR THE ISSUANCE OF GENERAL OBLIGATION BONDS OF THE CITY TO PROVIDE FUNDS TO PAY THE COSTS THEREOF AND FOR THE ISSUANCE OF TEMPORARY NOTES OF THE CITY PENDING THE ISSUANCE OF SAID BONDS; AND AUTHORIZING AND APPROVING CERTAIN RELATED MATTERS AND ACTIONS.

WHEREAS, the City of Leawood, Kansas (the "City") is authorized by K.S.A. Section 12-1736 et. seq. (the "Act") to alter, repair, reconstruct, remodel, replace or make additions to, furnish and equip a public building or buildings, and it has been proposed that the City make major improvements to the City's existing city hall facility located at 4800 Town Center Drive, Leawood, Kansas ("City Hall"), to include interior reconstruction, remodeling and renovation, equipment and furnishings, site improvements and addition parking facilities (the " City Hall Improvements"), and the cost of the City Hall Improvements has been estimated to be $ 2,100,000.00, and

WHEREAS, the Governing Body of the City hereby finds and determines that it is necessary and advisable to proceed with the City Hall Improvements and to provide for the issuance of general obligation bonds of the City in an amount not to exceed $2,100,000.00, for the purpose of financing the costs of said City Hall Improvements and related financing costs and for the issuance of temporary notes of the City pending the issuance of said bonds;

NOW, THEREFORE, BE IT ORDAINED BY THE GOVERNING BODY OF THE CITY OF LEAWOOD, KANSAS, AS FOLLOWS:

Section 1. That the Governing Body hereby finds and determines that it is necessary and desirable to alter, reconstruct, remodel, make additions to, furnish and equip the City Hall, and hereby authorizes the City Hall Improvements as aforesaid.

Section 2. That the Governing Body of the City hereby finds and determines that it is necessary and advisable to finance the cost of said City Hall Improvements, in whole or in part by the issuance of general obligation bonds of the City pursuant to the Act in an amount not to exceed $ 2,100,000.00.

Section 3. That pending issuance of the general obligation bonds of the City as hereinbefore provided and in order to provide funds to pay the costs of the City Hall Improvements, as such costs may be incurred, the City is hereby authorized to issue from time to time temporary notes of the City as provided by law.

Section 4. That to the extent the City shall pay all or any portion of the costs of the aforedescribed City Hall Improvements from available funds on hand prior to the issuance of temporary notes or bonds, the City hereby declares that it reasonably expects to reimburse such expenditures out of the proceeds of such temporary notes and such general obligation bonds. All such expenditures so reimbursed shall be capital expenditures with the meaning of Section 1.150-1(h) of the Income Tax Regulations (the "Regulations").

Section 5. That this declaration is a declaration of official intent adopted pursuant to Section 1.103-18 of the Regulations.

Section 6. That as of the date hereof, there are not City funds reserved, allocated on a long-term basis or otherwise set aside (or reasonably expected to be reserved, allocated on a long term basis or otherwise set aside) to provide permanent financing for the expenditures related to the City Hall Improvements, other than pursuant to the issuance of temporary notes or the bonds. This ordinance, therefore, is determined to be consistent with the City's budgetary and financial circumstances as they exist or are reasonably foreseeable on the date hereof, all within the meaning and content of the Regulations.

Section 7. That this Ordinance shall be filed within 30 days of its adoption in the publicly available official books and records of the City. This Ordinance shall be available for inspection at the office of the City Clerk at City Hall during normal business hours of the City on every business day until the date of issuance of bonds.

Section 8 That the City's Director of Finance shall be responsible for making any "reimbursement allocations" described in the Regulations, being generally the transfer of the appropriate amounts of proceeds of the notes or the bonds to reimburse the source of temporary financing used by the City to make payment of the prior costs of the City Hall Improvements. Each allocation shall be evidenced by an entry on the official books and records of the City maintained for the notes or the bonds, shall specifically identify the actual prior expenditure being reimbursed or, in the case of reimbursement of a fund or account in accordance with Section 1.103-18, the fund or account from which the expenditure was paid, and shall be effective to relieve the proceeds of the notes or the

bonds from any restriction under the ordinance or other documents authorizing the issuance of such notes or the bonds, and under any applicable state statute, which would apply to the unspent proceeds of the notes or the bonds.

Section 9. That this ordinance shall be in force and effect from and after its approval by the Governing Body and publication in the official City newspaper.

Passed by the Governing Body of the City of Leawood, Kansas this 20th day of May 1996.

Approved by the Mayor this 20th day of May, 1996.

(S E A L)

Marcia Rinehart

Marcia Rinehart Mayor

Attest:

Martha Heizer

Martha Heizer City Clerk

Approved for form:

R.S. Wetzler City Attorney

ORD1580

Publication Fees: $49.40

The Legal Record
600 E. Santa Fe, Suite 4
Olathe, KS 66061-3700

CITY OF LEAWOOD
ATTN: MARTHA HEIZER
4800 TOWN CENTER DR
LEAWOOD, KS 66211

Proof of Publication

STATE OF KANSAS, JOHNSON COUNTY, SS;
Tammy Schwien, of lawful age, being first duly sworn, deposes and says that she is Legal Notices Administrator of The Legal Record which is a newspaper printed in the State of Kansas, published in and of general paid circulation on a weekly, monthly or yearly basis in Johnson County, Kansas, is not a trade, religious or fraternal publication, is published at least weekly fifty (50) times a year, has been so published continuously and uninterrupted in said County and State for a period of more than five (5) years prior to the first publication of the notice attached, and has been admitted at the post office as second class matter.
That a notice was published in all editions of the regular and entire issue for the following subject matter (also identified by the following case number, if any) for 1 consecutive week(s), as follows:

ORDINANCE NO. 1580--5/21/96

Tammy Schwien
Legal Notices Administrator

Subscribed and sworn to before me on this date:
MAY 22, 1996

Debra Dziadura
Notary Public

DEBRA DZIADURA
Notary Public - State of Kansas

My appointment expires: August 21, 1999.

$49.40

ORDINANCE NO. 1580

First published in The Legal Record, Tuesday, May 21, 1996.

ORDINANCE NO. 1580

AN ORDINANCE AUTHORIZING THE IMPROVEMENT OF THE CITY OF LEAWOOD, KANSAS CITY HALL ; PROVIDING FOR THE ISSUANCE OF GENERAL OBLIGATION BONDS OF THE CITY TO PROVIDE FUNDS TO PAY THE COSTS THEREOF AND FOR THE ISSUANCE OF TEMPORARY NOTES OF THE CITY PENDING THE ISSUANCE OF SAID BONDS; AND AUTHORIZING AND APPROVING CERTAIN RELATED MATTERS AND ACTIONS.

WHEREAS, the City of Leawood, Kansas (the "City") is authorized by K.S.A. Section 12-1736 et. seq. (the "Act") to alter, repair, reconstruct, remodel, replace or make additions to, furnish and equip a public building or buildings, and it has been proposed that the City make major improvements to the City's existing city hall facility located at 4800 Town Center Drive, Leawood, Kansas ("City Hall"), to include interior reconstruction, remodeling and renovation, equipment and furnishings, site improvements and addition parking facilities (the " City Hall Improvements"), and the cost of the City Hall Improvements has been estimated to be $ 2,100,000.00, and

WHEREAS, the Governing Body of the City hereby finds and determines that it is necessary and advisable to proceed with the City Hall Improvements and to provide for the issuance of general obligation bonds of the City in an amount not to exceed $2,100,000.00, for the purpose of financing the costs of said City Hall Improvements and related financing costs and for the issuance of temporary notes of the City pending the issuance of said bonds;

NOW, THEREFORE, BE IT ORDAINED BY THE GOVERNING BODY OF THE CITY OF LEAWOOD, KANSAS, AS FOLLOWS:

Section 1. That the Governing Body hereby finds and determines that it is necessary and desirable to alter, reconstruct, remodel, make additions to, furnish and equip the City Hall, and hereby authorizes the City Hall Improvements as aforesaid.

Section 2. That the Governing Body of the City hereby finds and determines that it is necessary and advisable to finance the cost of said City Hall Improvements, in whole or in part by the issuance of general obligation bonds of the City pursuant to the Act in an amount not to exceed $ 2,100,000.00.

Section 3. That pending issuance of the general obligation bonds of the City as hereinbefore provided and in order to provide funds to pay the costs of the City Hall Improvements, as such costs may be incurred, the City is hereby authorized to issue from time to time temporary notes of the City as provided by law.

Section 4. That to the extent the City shall pay all or any portion of the costs of the aforedescribed City Hall Improvements from available funds on hand prior to the issuance of temporary notes or bonds, the City hereby declares that it reasonably expects to reimburse such expenditures out of the proceeds of such temporary notes and such general obligation bonds. All such expenditures so reimbursed shall be capital expenditures with the meaning of Section 1.150-1(h) of the Income Tax Regulations (the "Regulations").

Section 5. That this declaration is a declaration of official intent adopted pursuant to Section 1.103-18 of the Regulations.

Section 6. That as of the date hereof, there are not City funds reserved, allocated on a long-term basis or otherwise set aside (or reasonably expected to be reserved, allocated on a long term basis or otherwise set aside) to provide permanent financing for the expenditures related to the City Hall Improvements, other than pursuant to the issuance of temporary notes or the bonds. This ordinance, therefore, is determined to be consistent with the City's budgetary and financial circumstances as they exist or are reasonably foreseeable on the date hereof, all within the meaning and content of the Regulations.

Section 7. That this Ordinance shall be filed within 30 days of its adoption in the publicly available official books and records of the City. This Ordinance shall be available for inspection at the office of the City Clerk at City Hall during normal business hours of the City on every business day until the date of issuance of bonds.

Section 8 That the City's Director of Finance shall be responsible for making any "reimbursement allocations" described in the Regulations, being generally the transfer of the appropriate amounts of proceeds of the notes or the bonds to reimburse the source of temporary financing used by the City to make payment of the prior costs of the City Hall Improvements. Each allocation shall be evidenced by an entry on the official

CONTINUED ON PAGE 21

CONTINUED FROM PAGE 18

books and records of the City maintained for the notes or the bonds, shall specifically identify the actual prior expenditure being reimbursed or, in the case of reimbursement of a fund or account in accordance with Section 1.103-18, the fund or account from which the expenditure was paid, and shall be effective to relieve the proceeds of the notes or the bonds from any restriction under the ordinance or other documents authorizing the issuance of such notes or the bonds, and under any applicable state statute, which would apply to the unspent proceeds of the notes or the bonds.

Section 9. That this ordinance shall be in force and effect from and after its approval by the Governing Body and publication in the official City newspaper.

Passed by the Governing Body of the City of Leawood, Kansas this 20th day of May 1996.

Approved by the Mayor this 20th day of May, 1996.

(S E A L)

Marcia Rinehart
Marcia Rinehart Mayor

Attest:

Martha Heizer
Martha Heizer City Clerk

Approved for form:
R.S. Wetzler City Attorney

ORDINANCE NO. 1579

AN ORDINANCE DEFERRING AND POSTPONING CONSIDERATION OF APPLICATIONS FOR PRELIMINARY, REVISED PRELIMINARY, AND FINAL DEVELOPMENT PLANS, PRELIMINARY AND FINAL PLATS AND ZONING FOR ALL LAND IN THE AREA DEFINED AS THE K-150 CORRIDOR AND THAT PORTION OF LAND IMMEDIATELY ADJACENT THERETO CURRENTLY ZONED AG, AGRICULTURE; SD, SPECIAL DEVELOPMENT; CP-2, PLANNED GENERAL RETAIL; RP-2, PLANNED TWO FAMILY RESIDENTIAL; AND RP-3, PLANNED APARTMENT HOUSE TO PROTECT THE PUBLIC INTEREST.

WHEREAS, the K-150 Corridor is generating considerable interest from both developers and from the adjacent developing community; and

WHEREAS, it is the desire of the City of Leawood to create a vibrant commercial corridor while still maintaining a sense of community; and

WHEREAS, the Plan Commission has requested a land use study be undertaken to determine what land uses would be best suited for this area and what potential impacts could result from development within the study area; and

WHEREAS, the Governing Body concurs with the Plan Commission and wishes to place a hold on future development applications until a study can be commissioned and completed in providing a corridor land use plan that has been thoroughly studied to address all concerns raised as to the uses that are best suited for this area and what impacts both positive and negative such development will have on the surrounding area as well as on the general welfare of the City as a whole; and

WHEREAS, on the basis of the foregoing the Governing Body believes that public welfare requires postponement and deferral of City action on applications for preliminary, revised preliminary and final plans, preliminary and final plats and zoning submitted to the City from the effective date of this ordinance until such time that a land use study is completed and in effect for the area defined as the K-150 Corridor and adjacent areas as previously described within the City of Leawood; and

WHEREAS, the adoption of an ordinance deferring and postponing consideration of applications for preliminary, revised preliminary and final plans, preliminary and final plats and zoning is in the best interest of the City and is necessary to protect the public welfare.

NOW, THEREFORE, be it ordained by the City of Leawood:

Section 1. Action on plans, plats, and zoning deferred and postponed. The Governing Body of the City directs, except as provided hereinafter, that from the effective date of this ordinance until completion of a K-150 land use study the City will not consider new applications for preliminary, revised preliminary and final development plans, preliminary and final plats, and zoning in the area defined as the K-150 Corridor and adjacent area as previously described within the City and that same shall be deferred and postponed.

Section 2. Appeal Provisions. Any person aggrieved by this ordinance whose application for preliminary, revised preliminary or final plan, preliminary or final plat, or zoning has been deferred and postponed by City staff in accordance with this ordinance may make application to the Governing Body to vary and modify the effect of the ordinance if the Governing Body in its discretion determines that consideration of a particular preliminary, revised preliminary or final plan , preliminary or final plat, or zoning will not have any adverse effect upon the public welfare or private property. The Governing Body prior to making any decision regarding a particular application may refer the matter to the Plan Commission for their recommendation as to whether consideration of a particular application will have an adverse effect upon the public welfare or private property. If the Governing Body determines that consideration of a particular application will not have an adverse effect upon the public welfare or private property then the Governing Body shall direct that the application be considered by the City and its staff in the manner established by ordinance and without regard to the provisions of this ordinance.

Section 3. K-150 Corridor. As used herein, the K-150 Corridor shall mean that portion of the City of Leawood so identified on the current Master Development Plan Map on file in the Department of Planning and Development. Generally the K-150 Corridor includes all the land between the reverse frontage roads commonly known as 133rd Street on the north and 137th Street on the south.

Section 4. Take Effect. This ordinance shall take effect and be in force on publication in the City's official newspaper.

Passed by the City Council the 20th day of May, 1996.

Approved by the Mayor the 20th day of May, 1996.

(S E A L)

Marcia Rinehart

Marcia Rinehart Mayor

Attest:

Martha Heizer

Martha Heizer City Clerk

APPROVED FOR FORM:

R. S. Wetzler City Attorney

ORD1579

Publication Fees: $36.54

The Legal Record
600 E. Santa Fe, Suite 4
Olathe, KS 66061-3700

CITY OF LEAWOOD
ATTN: MARTHA HEIZER
4800 TOWN CENTER DR
LEAWOOD, KS 66211

Proof of Publication

STATE OF KANSAS, JOHNSON COUNTY, SS;
Tammy Schwien, of lawful age, being first duly sworn, deposes and says that she is Legal Notices Administrator of The Legal Record which is a newspaper printed in the State of Kansas, published in and of general paid circulation on a weekly, monthly or yearly basis in Johnson County, Kansas, is not a trade, religious or fraternal publication, is published at least weekly fifty (50) times a year, has been so published continuously and uninterrupted in said County and State for a period of more than five (5) years prior to the first publication of the notice attached, and has been admitted at the post office as second class matter.
That a notice was published in all editions of the regular and entire issue for the following subject matter (also identified by the following case number, if any) for 1 consecutive week(s), as follows:

ORDINANCE NO. 1579--5/21/96

Tammy Schwien
Legal Notices Administrator

Subscribed and sworn to before me on this date:
MAY 22, 1996

Debra Dziadura
Notary Public

DEBRA DZIADURA
Notary Public - State of Kansas

My appointment expires: August 21, 1999.

$36.54

ORDINANCE NO. 1579

First published in The Legal Record, Tuesday, May 21, 1996.

ORDINANCE NO. 1579

AN ORDINANCE DEFERRING AND POSTPONING CONSIDERATION OF APPLICATIONS FOR PRELIMINARY, REVISED PRELIMINARY, AND FINAL DEVELOPMENT PLANS, PRELIMINARY AND FINAL PLATS AND ZONING FOR ALL LAND IN THE AREA DEFINED AS THE K-150 CORRIDOR AND THAT PORTION OF LAND IMMEDIATELY ADJACENT THERETO CURRENTLY ZONED AG, AGRICULTURE; SD, SPECIAL DEVELOPMENT; CP-2, PLANNED GENERAL RETAIL; RP-2, PLANNED TWO FAMILY RESIDENTIAL; AND RP-3, PLANNED APARTMENT HOUSE TO PROTECT THE PUBLIC INTEREST.

WHEREAS, the K-150 Corridor is generating considerable interest from both developers and from the adjacent developing community; and

WHEREAS, it is the desire of the City of Leawood to create a vibrant commercial corridor while still maintaining a sense of community; and

WHEREAS, the Plan Commission has requested a land use study be undertaken to determine what land uses would be best suited for this area and what potential impacts could result from development within the study area; and

WHEREAS, the Governing Body concurs with the Plan Commission and wishes to place a hold on future development applications until a study can be commissioned and completed in providing a corridor land use plan that has been thoroughly studied to address all concerns raised as to the uses that are best suited for this area and what impacts both positive and negative such development will have on the surrounding area as well as on the general welfare of the City as a whole; and

WHEREAS, on the basis of the foregoing the Governing Body believes that public welfare requires postponement and deferral of City action on applications for preliminary, revised preliminary and final plans, preliminary and final plats and zoning submitted to the City from the effective date of this ordinance until such time that a land use study is completed and in effect for the area defined as the K-150 Corridor and adjacent areas as previously described within the City of Leawood; and

WHEREAS, the adoption of an ordinance deferring and postponing consideration of applications for preliminary, revised preliminary and final plans, preliminary and final plats and zoning is in the best interest of the City and is necessary to protect the public welfare.

NOW, THEREFORE, be it ordained by the City of Leawood:

Section 1. Action on plans, plats, and zoning deferred and postponed. The Governing Body of the City directs, except as provided hereinafter, that from the effective date of this ordinance until completion of a K-150 land use study the City will not consider new applications for preliminary, revised preliminary and final development plans, preliminary and final plats, and zoning in the area defined as the K-150 Corridor and adjacent area as previously described within the City and that same shall be deferred and postponed.

Section 2. Appeal Provisions. Any person aggrieved by this ordinance whose application for preliminary, revised preliminary or final plan, preliminary or final plat, or zoning has been deferred and postponed by City staff in accordance with this ordinance may make application to the Governing Body to vary and modify the effect of the ordinance if the Governing Body in its discretion determines that consideration of a particular preliminary, revised preliminary or final plan, preliminary or final plat, or zoning will not have any adverse effect upon the public welfare or private property. The Governing Body prior to making any decision regarding a particular application may refer the matter to the Plan Commission for their recommendation as to whether consideration of a particular application will have an adverse effect upon the public welfare or private property. If the Governing Body determines that consideration of a particular application will not have an adverse effect upon the public welfare or private property then the Governing Body shall direct that the application be considered by the City and its staff in the manner established by ordinance and without regard to the provisions of this ordinance.

Section 3. K-150 Corridor. As used herein, the K-150 Corridor shall mean that portion of the City of Leawood so identified on the current Master Development Plan Map on file in the Department of Planning and Development. Generally the K-150 Corridor includes all the land between the reverse frontage roads commonly known as 133rd Street on the north and 137th Street on the south.

Section 4. Take Effect. This ordinance shall take effect and be in force on publication in the City's official newspaper.

Passed by the City Council the 20th day of May, 1996.

Approved by the Mayor the 20th day of May, 1996.

(S E A L)

Marcia Rinehart
Marcia Rinehart Mayor

Attest:

Martha Heizer
Martha Heizer City Clerk

APPROVED FOR FORM:
R. S. Wetzler City Attorney

ORDINANCE NO. 1578 C

AN ORDINANCE AMENDING SECTION 11-307 OF THE CODE OF THE CITY OF LEAWOOD RELATING TO THE NUISANCE ALARM APPEALS COMMITTEE, AND REPEALING EXISTING SECTION.

Be it ordained by the Governing Body of the City of Leawood:

Section 1. Code Amended. That Section 11-307 of the Code of the City of Leawood is hereby amended to read as follows:

11-307. APPEALS. An alarm system user who desires to appeal a fee imposed by Section 11-306 shall submit a written request for a hearing to the chief of police, who shall notify the governing body. The governing body shall then direct the Alarm Appeals Committee consisting of 3 members appointed by the Mayor with the consent of the Council to meet and consider the appeal. Committee members shall serve 2-year terms.

Section 2. Repeal of Existing Section. That existing Section 11-307 of the Code of the City of Leawood is hereby repealed. (Prior law: Ord. No. 1467C)

Section 3. Take Effect. That this ordinance shall take effect and be in force from and after its publication in the official City newspaper.

Passed by the Council the 6th day of May, 1996.

Approved by the Mayor the 6th day of May, 1996.

(S E A L)

Marcia Rinehart
Marcia Rinehart Mayor

Attest:

Martha Heizer
Martha Heizer City Clerk

APPROVED FOR FORM:
R.S. Wetzler City Attorney

ORD1578C

Publication Fees: $15.27

The Legal Record
600 E. Santa Fe, Suite 4
Olathe, KS 66061-3700

CITY OF LEAWOOD
ATTN: MARTHA HEIZER
4800 TOWN CENTER DR
LEAWOOD, KS 66211

Proof of Publication

STATE OF KANSAS, JOHNSON COUNTY, SS;
Tammy Schwien, of lawful age, being first duly sworn, deposes and says that she is Legal Notices Administrator of The Legal Record which is a newspaper printed in the State of Kansas, published in and of general paid circulation on a weekly, monthly or yearly basis in Johnson County, Kansas, is not a trade, religious or fraternal publication, is published at least weekly fifty (50) times a year, has been so published continuously and uninterrupted in said County and State for a period of more than five (5) years prior to the first publication of the notice attached, and has been admitted at the post office as second class matter.
That a notice was published in all editions of the regular and entire issue for the following subject matter (also identified by the following case number, if any) for 1 consecutive week(s), as follows:

ORDINANCE NO. 1578C--5/7/96

Tammy Schwien
Legal Notices Administrator

Subscribed and sworn to before me on this date:
MAY 8, 1996

Debra Dziadura
Notary Public

DEBRA DZIADURA
Notary Public - State of Kansas

My appointment expires: August 21, 1999.

ORDINANCE NO. 1578 C

First published in The Legal Record, Tuesday, May 7, 1996.

ORDINANCE NO. 1578 C

AN ORDINANCE AMENDING SECTION 11-307 OF THE CODE OF THE CITY OF LEAWOOD RELATING TO THE NUISANCE ALARM APPEALS COMMITTEE, AND REPEALING EXISTING SECTION.

Be it ordained by the Governing Body of the City of Leawood:

Section 1. Code Amended. That Section 11-307 of the Code of the City of Leawood is hereby amended to read as follows:

11-307. APPEALS. An alarm system user who desires to appeal a fee imposed by Section 11-306 shall submit a written request for a hearing to the chief of police, who shall notify the governing body. The governing body shall then direct the Alarm Appeals Committee consisting of 3 members appointed by the Mayor with the consent of the Council to meet and consider the appeal. Committee members shall serve 2-year terms.

Section 2. Repeal of Existing Section. That existing Section 11-307 of the Code of the City of Leawood is hereby repealed. (Prior law: Ord. No. 1467C)

Section 3. Take Effect. That this ordinance shall take effect and be in force from and after its publication in the official City newspaper.

Passed by the Council the 6th day of May, 1996.

Approved by the Mayor the 6th day of May, 1996.

(S E A L)

Marcia Rinehart
Marcia Rinehart Mayor

Attest:

Martha Heizer
Martha Heizer City Clerk

APPROVED FOR FORM:
R.S. Wetzler City Attorney

$15.27

ORDINANCE NO. 1577

AN ORDINANCE WHEREBY THE CITY GRANTS UNTO ITSELF A PERMANENT DRAINAGE EASEMENT ACROSS THE IRONHORSE GOLF COURSE PROPERTY FOR CONSTRUCTION OF STORM SEWERS FOR THE RESERVE AT IRONHORSE SUBDIVISION.

Be it ordained by the Governing Body of the City of Leawood:

Section 1. That the City of Leawood, Kansas, does hereby grant unto itself a permanent drainage easement across the Ironhorse golf course property herein more particularly designated and described, to wit:

A tract of land 50 feet in width across a part of the North 50 acres of the NW1/4 of Section 10, Township 14, Range 25, now in the City of Leawood, Johnson County, Kansas, lying 25 feet on each side of the following described centerline: Commencing at the Northwest corner of the NW1/4 of said Section 10; thence S 2°04'56" E, along the West line of the NW1/4 of said Section 10, a distance 784.71 feet; thence N 85° 32'33" E, a distance of 287.60 feet, to a point "A", said point also being the true point of beginning of subject tract; thence S 42°54'59" E, a distance of 17.10 feet, to point "G", of which a tract of land 10 feet in width, lying 5 feet on each side of the above described centerline shall be a permanent easement and the remainder shall be a temporary construction easement...and also...a tract of land 50 feet in width across a part of the North 50 acres of the NW1/4 of said Section 10, lying 25 feet on each side of the following described centerline: Beginning at said point "G"; thence S 42°54'59" E, a distance of 25 feet, which shall be a temporary construction easement...and also...a tract of land 25 feet in width across a part of the North 50 acres of the NW1/4 of said Section 10, lying 25 feet on each side of the following described centerline: Beginning at said point "A"; thence N 42°54'59" W, a distance of 41.61 feet; thence N 22° 07'10" W, a distance of 59.06 feet, to point "H", of which a tract of land 10 feet in width, lying 5 feet on each side of the above described centerline, shall be a permanent easement and the remainder shall be a temporary construction easement...and also...a tract of land 50 feet in width across a part of the North 50 acres of the NW1/4 of said Section 10, lying 25 feet on each side of the following described centerline: Beginning at said point "H"; thence N 22°07'10" W, a distance of 25 feet, which shall be a temporary construction easement...and also...a tract of land 50 feet in width across a part of the North 50 acres of the NW1/4 of said Section 10, lying 25 feet on each side of the following described centerline: Commencing at said point "A"; thence N 85°32'33" E, a distance of 48.12 feet; thence N 77°58'31" E,

a distance of 108.65 feet; thence N 46°19'17" E, a distance of 41.63 feet; thence N 54°07'10" E, a distance of 174.51 feet; thence N 36°38'27" E, a distance of 120.94 feet; thence N 82°03'04" E, a distance of 66.51 feet, to point "B", said point also being the true point of beginning of subject tract; thence S 2°10'23" E, a distance of 31.76 feet, to point "J", of which a tract of land 10 feet in width, lying 5 feet on each side of the above described centerline, shall be a permanent easement and the remainder shall be a temporary construction easement...and also...a tract of land 50 feet in width across a part of the North 50 acres of the NW1/4 of said Section 10, lying 25 feet on each side of the following described centerline: Beginning at said point "J"; thence S 2°10'23" E, a distance of 25 feet, which shall be a temporary construction easement...and also...a tract of land 50 feet in width across a part of the North 50 acres of the NW1/4 of said Section 10, lying 25 feet on each side of the following described centerline: Commencing at said point "B"; thence N 82°03'04" E, a distance of 127.67 feet; thence S 87°12'25" E, a distance of 95.23 feet; thence N 80°37'59" E, a distance of 63.98 feet; thence N 78°30'26" E, a distance of 162.86 feet; thence N 37°01'36" E, a distance of 157.17 feet, to point "C", said point also being the true point of beginning of subject tract; thence S 54°42'47" E, a distance of 10.01 feet, to point "K", of which a tract of land 10 feet in width, lying 5 feet on each side of the above described centerline, shall be a permanent easement and the remainder shall be a temporary construction easement...and also...a tract of land 50 feet in width across a part of the North 50 acres of the NW1/4 of said Section 10, lying 25 feet on each side of the following described centerline: Commencing at said point "C"; thence N 37°01'36" E, a distance of 75.77 feet; thence N 69°41'25" E, a distance of 36.90 feet; thence S 79°01' 56" E, a distance of 112.97 feet; thence N 75°17'11" E, a distance of 2.09 feet, to point "D", said point also being the true point of beginning of subject tract; thence S 2° 29'16" W, a distance of 2.81 feet; thence N 87°30'44" W, a distance of 138.74 feet; thence S 37°01'36" W, a distance of 76.82 feet, to point "K"; thence continuing S 37°01'36" W, a distance of 38.75 feet, to point "L", of which a tract of land 10 feet in width, lying 5 feet on each side of the above described centerline shall be a permanent easement and the remainder shall be a temporary construction easement...and also...a tract of land 50 feet in width across a part of the North 50 acres of the NW1/4 of said Section 10, lying 25 feet on each side of the following described centerline: Beginning at said point "K"; thence S 54°42'47" E, a distance of

25 feet, which shall be a temporary construction easement...and also...a tract of land 50 feet in width across a part of the North 50 acres of the NW1/4 of said Section 10, lying 25 feet on each side of the following described centerline: Beginning at said point "L"; thence S 37°01'36" W, a distance of 25 feet, which shall be a temporary construction easement...and also...a tract of land 50 feet in width across a part of the North 50 acres of the NW1/4 of said Section 10, lying 25 feet on each side of the following described centerline: Commencing at said point "D"; thence N 75°17'11" E, a distance of 43.80 feet; thence S 65°39'12" E, a distance of 94.18 feet; thence S 79°01'56" E, a distance of 213.75 feet, to point "E"; thence S 33°04'57" E, a distance of 78.36 feet, to point "M", of which a tract of land 10 feet in width, lying 5 feet on each side of the above described centerline, shall be a permanent easement and the remainder shall be a temporary construction easement...and also...a tract of land 50 feet in width across a part of the North 50 acres of the NW1/4 of said Section 10, lying 25 feet on each side of the following described centerline: Beginning at said point "M"; thence S 33°04'57" E, a distance of 25 feet, which shall be a temporary construction easement...and also...a tract of land 50 feet in width across a part of the North 50 acres of the NW1/4 of said Section 10, lying 25 feet on each side of the following described centerline: Commencing at said point "E"; thence S 79°01'56" E, a distance of 157.87 feet; thence N 69°56'20" E, a distance of 194.48 feet; thence N 66°07'26" E, a distance of 98.78 feet; thence N 73° 41' E, a distance of 100.64 feet; thence N 84°02'58" E, a distance of 68.48 feet, to point "F", said point also being the true point of beginning of subject tract; thence S 2° 18'48" E, a distance of 50.06 feet, to point "N", of which a tract of land 10 feet in width, lying 5 feet on each side of the above described centerline shall be a permanent easement and the remainder shall be a temporary construction easement...and also...a tract of land 50 feet in width across a part of the North 50 acres of the NW1/4 of said Section 10, lying 25 feet on each side of the following described centerline: Beginning at said point "N"; thence S 2°18'48" E, a distance of 25 feet, which shall be a temporary construction easement.

Section 2. That a copy of said Permanent Drainage Easement is attached hereto and thereby incorporated by reference.

Section 3. That this ordinance shall take effect and be in force from and after its publication in the official City newspaper.

Passed by the Council the 15th day of April, 1996.

Approved by the Mayor the 15th day of April, 1996.

(S E A L)

Marcia Rinehart Mayor

Attest:

Martha Heizer City Clerk

APPROVED FOR FORM:

R.S. Wetzler City Attorney

ORD 1577

Publication Fees: $61.02

The Legal Record
600 E. Santa Fe, Suite 4
Olathe, KS 66061-3700

CITY OF LEAWOOD
ATTN: MARTHA HEIZER
4800 TOWN CENTER DR
LEAWOOD, KS 66211

Proof of Publication

STATE OF KANSAS, JOHNSON COUNTY, SS;
Tammy Schwien, of lawful age, being first duly sworn, deposes and says that she is Legal Notices Administrator of The Legal Record which is a newspaper printed in the State of Kansas, published in and of general paid circulation on a weekly, monthly or yearly basis in Johnson County, Kansas, is not a trade, religious or fraternal publication, is published at least weekly fifty (50) times a year, has been so published continuously and uninterrupted in said County and State for a period of more than five (5) years prior to the first publication of the notice attached, and has been admitted at the post office as second class matter.
That a notice was published in all editions of the regular and entire issue for the following subject matter (also identified by the following case number, if any) for 1 consecutive week(s), as follows:

ORDINANCE NO. 1577--4/23/96

Tammy Schwien
Legal Notices Administrator

Subscribed and sworn to before me on this date:
APRIL 24, 1996

Debra Dziadura
Notary Public

DEBRA DZIADURA
Notary Public - State of Kansas

My appointment expires: August 21, 1999.

$61.02

ORDINANCE NO. 1577

First published in The Legal Record, Tuesday, April 23, 1996.

ORDINANCE NO. 1577.

AN ORDINANCE WHEREBY THE CITY GRANTS UNTO ITSELF A PERMANENT DRAINAGE EASEMENT ACROSS THE IRONHORSE GOLF COURSE PROPERTY FOR CONSTRUCTION OF STORM SEWERS FOR THE RESERVE AT IRONHORSE SUBDIVISION.

Be it ordained by the Governing Body of the City of Leawood:

Section 1. That the City of Leawood, Kansas, does hereby grant unto itself a permanent drainage easement across the Ironhorse golf course property herein more particularly designated and described, to wit:

A tract of land 50 feet in width across a part of the North 50 acres of the NW1/4 of Section 10, Township 14, Range 25, now in the City of Leawood, Johnson County, Kansas, lying 25 feet on each side of the following described centerline: Commencing at the Northwest corner of the NW1/4 of said Section 10; thence S 2°04'56" E, along the West line of the NW1/4 of said Section 10, a distance 734.71 feet; thence N 85° 32'33" E, a distance of 287.60 feet, to a point "A", said point also being the true point of beginning of subject tract; thence S 42°54'59" E, a distance of 17.10 feet, to point "G", of which a tract of land 10 feet in width, lying 5 feet on each side of the above described centerline shall be a permanent easement and the remainder shall be a temporary construction easement...and also...a tract of land 50 feet in width across a part of the North 50 acres of the NW1/4 of said Section 10, lying 25 feet on each side of the following described centerline: Beginning at said point "G"; thence S 42°54'59" E, a distance of 25 feet, which shall be a temporary construction easement...and also...a tract of land 25 feet in width across a part of the North 50 acres of the NW1/4 of said Section 10, lying 25 feet on each side of the following described centerline: Beginning at said point "A"; thence N 42°54'59" W, a distance of 41.61 feet; thence N 22° 07'10" W, a distance of 59.06 feet, to point "H", of which a tract of land 10 feet in width, lying 5 feet on each side of the above described centerline, shall be a permanent easement and the remainder shall be a temporary construction easement...and also...a tract of land 50 feet in width across a part of the North 50 acres of the NW1/4 of said Section 10, lying 25 feet on each side of the following described centerline: Beginning at said point "H"; thence N 22°07'10" W, a distance of 25 feet, which shall be a temporary construction easement...and also...a tract of land 50 feet in width across a part of the North 50 acres of the NW1/4 of said Section 10, lying 25 feet on each side of the following described centerline: Commencing at said point "A"; thence N 85°32'33" E, a distance of 48.12 feet; thence N 77°58'31" E, a distance of 108.65 feet; thence N 46°19'17" E, a distance of 41.63 feet; thence N 54°07'10" E, a distance of 174.51 feet; thence N 36°38'27" E, a distance of 120.94 feet; thence N 82°03'04" E, a distance of 66.51 feet, to point "B", said point also being the true point of beginning of subject tract; thence S 2°10'23" E, a distance of 31.76 feet, to point "J", of which a tract of land 10 feet in width, lying 5 feet on each side of the above described centerline, shall be a permanent easement and the remainder shall be a temporary construction easement...and also...a tract of land 50 feet in width across a part of the North 50 acres of the NW1/4 of said Section 10, lying 25 feet on each side of the following described centerline: Beginning at said point "J"; thence S 2°10'23" E, a distance of 25 feet, which shall be a temporary construction easement...and also...a tract of land 50 feet in width across a part of the North 50 acres of the NW1/4 of said Section 10, lying 25 feet on each side of the following described centerline: Commencing at said point "B"; thence N 82°03'04" E, a distance of 127.67 feet; thence S 87°12'25" E, a distance of 95.23 feet; thence N 80°37'59" E, a distance of 63.98 feet; thence N 78°30'26" E, a distance of 162.86 feet; thence N 37°01'36" E, a distance of 157.17 feet, to point "C", said point also being the true point of beginning of subject tract; thence S 54°42'47" E, a distance of 10.01 feet, to point "K", of which a tract of land 10 feet in width, lying 5 feet on each side of the above described centerline, shall be a permanent easement and the remainder shall be a temporary construction easement...and also...a tract of land 50 feet in width across a part of the North 50 acres of the NW1/4 of said Section 10, lying 25 feet on each side of the following described centerline: Commencing at said point "C"; thence N 37°01'36" E, a distance of 75.77 feet; thence N 69°41'25" E, a distance of 36.90 feet; thence S 79°01' 56" E, a distance of 112.97 feet; thence N 75°17'11" E, a distance of 2.09 feet, to point "D", said point also being the true point of beginning of subject tract; thence S 2° 29'16" W, a distance of 2.81 feet; thence N 87°30'44" W, a distance of 138.74 feet; thence S 37°01'36" W, a distance of 75.82 feet, to point "K"; thence continuing S 37°01'36" W, a distance of 38.75 feet, to point "L", of which a tract of land 10 feet in width, lying 5 feet on each side of the above described centerline shall be a permanent easement and the remainder shall be a temporary construction easement...and also...a tract of land 50 feet in width across a part of the North 50 acres of the NW1/4 of said Section 10, lying 25 feet on each side of the following described centerline: Beginning at said point "K"; thence S 54°42'47" E, a distance of 25 feet, which shall be a temporary construction easement...and also...a tract of land 50 feet in width across a part of the North 50 acres of the NW1/4 of said Section 10, lying 25 feet on each side of the following described centerline: Beginning at said point "L"; thence S 37°01'36" W, a distance of 25 feet, which shall be a temporary construction easement...and also...a tract of land 50 feet in width across a part of the North 50 acres of the NW1/4 of said Section 10, lying 25 feet on each side of the following described centerline: Commencing at said point "D"; thence N 75°17'11" E, a distance of 43.80 feet; thence S 65°39'12" E, a distance of 94.18 feet; thence S 79°01'56" E, a distance of 213.75 feet, to point "E"; thence S 33°04'57" E, a distance of 78.36 feet, to point "M", of which a tract of land 10 feet in width, lying 5 feet on each side of the above described centerline, shall be a permanent easement and the remainder shall be a temporary construction easement...and also...a tract of land 50 feet in width across a part of the North 50 acres of the NW1/4 of said Section 10, lying 25 feet on each side of the following described centerline: Beginning at said point "M"; thence S 33°04'57" E, a distance of 25 feet, which shall be a temporary construction easement...and also...a tract of land 50 feet in width across a part of the North 50 acres of the NW1/4 of said Section 10, lying 25 feet on each side of the following described centerline: Commencing at said point "E"; thence S 79°01'56" E, a distance of 157.87 feet; thence N 69°56'20" E, a distance of 194.48 feet; thence N 66°07'26" E, a distance of 98.78 feet; thence N 73° 41' E, a distance of 100.64 feet; thence N 84°02'58" E, a distance of 68.48 feet, to point "F", said point also being the true point of beginning of subject tract; thence S 2° 18'48" E, a distance of 50.06 feet, to point "N", of which a tract of land 10 feet in width, lying 5 feet on each side of the above described centerline shall be a permanent easement and the remainder shall be a temporary construction easement...and also...a tract of land 50 feet in width across a part of the North 50 acres of the NW1/4 of said Section 10, lying 25 feet on each side of the following described centerline: Beginning at said point "N"; thence S 2°18'48" E, a distance of 25 feet, which shall be a temporary construction easement.

Section 2. That a copy of said Permanent Drainage Easement is attached hereto and thereby incorporated by reference.

Section 3. That this ordinance shall take effect and be in force from and after its publication in the official City newspaper.

Passed by the Council the 15th day of April, 1996.

Approved by the Mayor the 15th day of April, 1996.

(S E A L)

Marcia Rinehart
Marcia Rinehart Mayor

Attest:

Martha Heizer
Martha Heizer City Clerk

APPROVED FOR FORM: /s/ R.S. Wetzler
R.S. Wetzler City Attorney

ORDINANCE NO. 1576

AN ORDINANCE WHEREBY THE CITY GRANTS A STORM SEWER EASEMENT UNTO ITSELF ACROSS THE IRONHORSE GOLF COURSE PROPERTY FOR THE CONSTRUCTION OF STORM SEWERS AT THE RESERVE AT IRONHORSE SUBDIVISION.

Be it ordained by the Governing Body of the City of Leawood:

Section 1. That the City of Leawood, Kansas, does hereby grant unto itself a storm sewer easement across Ironhorse golf course property, hereinafter more particularly designated and described, to wit:

Two separate tracts, both in the Northwest 1/4 of Section 9, Township 14 South, Range 25 East, City of Leawood, Johnson County, Kansas, and both adjacent to the MEADOWS OF IRON HORSE, a subdivision in said Northwest 1/4, said tracts being more particularly described as follows:

Tract 1: Commencing at the Southern most corner of Lot 21 of said MEADOWS OF IRON HORSE subdivision; thence N 68°-57'-58" W, along the Southwesterly line of said Lot 21, 8.49 feet to the Point of Beginning; thence S 31°-06'-27" W, 47.33 feet; thence N 58°-53'-33" W, 15.00 feet; thence N 31°-06'-27" E, 44.67 feet to said Southwesterly line; thence S 68°-57'-58" E, along said Southwesterly line, 15.23 feet to the Point of Beginning.

Tract 2: Beginning at the most Southerly corner common to both Lot 20 and Lot 21 of said MEADOWS OF IRON HORSE subdivision; thence S 68°-57'-58" E, along the Southwesterly line of said Lot 21, 8.56 feet; thence S 07°-45'-20" E, 18.88 feet; thence S 82°-14'-40" W, 15.00 feet; thence N 07°- 45'-20" W, 18.59 feet to the Southeasterly line of said Lot 20; thence N 51°-48'-44" E, along said Southeasterly line of said Lot 20, 8.70 feet to the Point of Beginning.

Section 2. That a copy of said easement is attached hereto and thereby incorporated by reference.

Section 3. That this ordinance shall take effect and be in force from and after its publication in the official City newspaper.

Passed by the Council the 15th day of April, 1996.

Approved by the Mayor the 15th day of April, 1996.

(S E A L)

Marcia Rinehart
Marcia Rinehart Mayor

Attest:

Martha Heizer City Clerk

APPROVED FOR FORM:

R.S. Wetzler City Attorney

ORD1576

The Legal Record

600 E. Santa Fe, Suite 4
Olathe, KS 66061-3700

Publication Fees: $22.00

CITY OF LEAWOOD
ATTN: MARTHA HEIZER
4800 TOWN CENTER DR
LEAWOOD, KS 66211

Proof of Publication

STATE OF KANSAS, JOHNSON COUNTY, SS;
Tammy Schwien, of lawful age, being first duly sworn, deposes and says that she is Legal Notices Administrator of The Legal Record which is a newspaper printed in the State of Kansas, published in and of general paid circulation on a weekly, monthly or yearly basis in Johnson County, Kansas, is not a trade, religious or fraternal publication, is published at least weekly fifty (50) times a year, has been so published continuously and uninterrupted in said County and State for a period of more than five (5) years prior to the first publication of the notice attached, and has been admitted at the post office as second class matter.
That a notice was published in all editions of the regular and entire issue for the following subject matter (also identified by the following case number, if any) for 1 consecutive week(s), as follows:

ORDINANCE NO. 1576--4/23/96

Tammy Schwien
Legal Notices Administrator

Subscribed and sworn to before me on this date:
APRIL 24, 1996

Debra Dziadura
Notary Public

DEBRA DZIADURA
Notary Public - State of Kansas

My appointment expires: August 21, 1999.

ORDINANCE NO. 1576

First published in The Legal Record, Tuesday, April 23, 1996.

ORDINANCE NO. 1576

AN ORDINANCE WHEREBY THE CITY GRANTS A STORM SEWER EASEMENT UNTO ITSELF ACROSS THE IRONHORSE GOLF COURSE PROPERTY FOR THE CONSTRUCTION OF STORM SEWERS AT THE RESERVE AT IRONHORSE SUBDIVISION.

Be it ordained by the Governing Body of the City of Leawood:

Section 1. That the City of Leawood, Kansas, does hereby grant unto itself a storm sewer easement across Ironhorse golf course property, hereinafter more particularly designated and described, to wit:

Two separate tracts, both in the Northwest 1/4 of Section 9, Township 14 South, Range 25 East, City of Leawood, Johnson County, Kansas, and both adjacent to the MEADOWS OF IRON HORSE, a subdivision in said Northwest 1/4, said tracts being more particularly described as follows:

Tract 1: Commencing at the Southern most corner of Lot 21 of said MEADOWS OF IRON HORSE subdivision; thence N 68°-57'-58" W, along the Southwesterly line of said Lot 21, 8.49 feet to the Point of Beginning; thence S 31°-06'-27" W, 47.33 feet; thence N 58°-53'-33" W, 15.00 feet; thence N 31°-06'-27" E, 44.67 feet to said Southwesterly line; thence S 68°-57'-58" E, along said Southwesterly line, 15.23 feet to the Point of Beginning.

Tract 2: Beginning at the most Southerly corner common to both Lot 20 and Lot 21 of said MEADOWS OF IRON HORSE subdivision; thence S 68°-57'-58" E, along the Southwesterly line of said Lot 21, 8.56 feet; thence S 07°-45'-20" E, 18.88 feet; thence S 82°-14'-40" W, 15.00 feet; thence N 07°- 45'-20" W, 18.59 feet to the Southeasterly line of said Lot 20; thence N 51°-48'-44" E, along said Southeasterly line of said Lot 20, 8.70 feet to the Point of Beginning.

Section 2. That a copy of said easement is attached hereto and thereby incorporated by reference.

Section 3. That this ordinance shall take effect and be in force from and after its publication in the official City newspaper.

Passed by the Council the 15th day of April, 1996.

Approved by the Mayor the 15th day of April, 1996.

(S E A L)

Marcia Rinehart
Marcia Rinehart Mayor

Attest:

Martha Heizer
Martha Heizer City Clerk

APPROVED FOR FORM: /s/ R.S. Wetzler
R.S. Wetzler City Attorney

$22.00

ORDINANCE NO. 1575

AN ORDINANCE GRANTING A RIGHT-OF-WAY EASEMENT FOR SANITARY SEWER LINES ACROSS IRONHORSE GOLF COURSE PROPERTY TO JOHNSON COUNTY WASTEWATER DISTRICT.

Be it ordained by the Governing Body of the City of Leawood:

Section 1. That the City of Leawood, Kansas, does hereby grant and convey to Johnson County Wastewater District a Right-of-Way to lay, construct, maintain, alter, repair, replace, and operate one or more sewer lines and all appurtenances convenient for the collection of sanitary sewage, together with the right of ingress and egress, over and through the following premises in the County of Johnson in the State of Kansas, to wit:

A tract of land 50 feet in width across a part of the North 50 acres of the NW1/4 of Section 10, Township 14, Range 25, now in the City of Leawood, Johnson County, Kansas, lying 25 feet on each side of the following described centerline: Commencing at the Northwest corner of the NW1/4 of said Section 10; thence S 2°04'56" E, along the West line of the NW1/4 of said Section 10, a distance of 784.71 feet; thence N 85°32'33" E, a distance of 330.89 feet, to point "A", said point also being the true point of beginning of subject tract; thence S 10°29'13" E, a distance of 30.56 feet, to point "B", of which a tract of land 15 feet in width, lying 7.50 feet on each side of the above described centerline shall be a permanent easement and the remainder shall be a temporary construction easement...and also...a tract of land 50 feet in width across a part of the North 50 acres of the NW1/4 of said Section 10, lying 25 feet on each side of the following described centerline: Beginning at said point "B"; thence S 10°29'13" E, a distance of 25 feet, which shall be a temporary construction easement...and also...a tract of land 50 feet in width across a part of the North 50 acres of the NW1/4 of said Section 10, lying 25 feet on each side of the following described centerline: Commencing at said point "A"; thence N 85°32'33" E, a distance of 4.84 feet; thence N 77°58'31" E, a distance of 108.65 feet; thence N 46°19'17" E, a distance of 41.63 feet; thence N 54°07'10" E, a distance of 174.51 feet; thence N 36°38'27" E, a distance of 120.94 feet; thence N 82°03'04" E, a distance of 194.18 feet; thence S 87°12'25" E, a distance of 95.23 feet; thence N 80°37'59" E, a distance of 63.98 feet; thence N 78°30'26" E, a distance of 162.86 feet; thence N 37°01'36" E, a distance of 50.03 feet, to the true point of beginning of subject tract; thence S 51°49'01" E, a distance of 118.46 feet, to point "C", of which a tract of land 15 feet in width, lying 7.50 feet on each side of the above described centerline shall be a

permanent easement and the remainder shall be a temporary construction easement...and also...a tract of land 50 feet in width across a part of the North 50 acres of the NW1/4 of said Section 10, lying 25 feet on each side of the following described centerline: Beginning at said point "C"; thence S 51°49'01" E, a distance of 25 feet, which shall be a temporary construction easement.

Section 2. That a copy of said Right-of-Way Grant is attached hereto and thereby incorporated by reference.

Section 3. That this ordinance shall take effect and be in force from and after its publication in the official City newspaper.

Passed by the Council the 15th day of April, 1996.

Approved by the Mayor the 15th day of April, 1996.

(S E A L)

Marcia Rinehart
Marcia Rinehart Mayor

Attest:

Martha Heizer by Fran Kessler Asst City Clerk
Martha Heizer City Clerk

APPROVED FOR FORM:
R.S. Wetzler City Attorney

AFFIDAVIT OF PUBLICATION

STATE OF KANSAS, JOHNSON COUNTY,ss: Georgiann Thacker being first Duly sworn, Deposes and says: That she is legal publications manager of THE JOHNSON COUNTY SUN, a semi-weekly newspaper printed in the State of Kansas, and published in and of general circulation in JOHNSON COUNTY, Kansas, and that said newspaper is not a trade, religious or fraternal publication.

Said newspaper is a semi-weekly published at least weekly 50 times a year; has been so published continuously and uninterruptedly in said county and state for a period of more than five years prior to the first publication of said notice; and has been admitted at the post office of SHAWNEE MISSION, KANSAS in said County as a second class matter.

That the attached notice is a true copy thereof and was published in the regular and entire issue of said newspaper for one consecutive day (weeks/days), the first publication thereof being made as aforesaid on the 19th day of April 1996, with subsequent publication being made on the following dates:

_____, 19____ _____, 19____

_____, 19____ _____, 19____

Georgiann Thacker

Subscribed and sworn to before me this 19th day of April 1996

Deanna J. Martasin
NOTARY PUBLIC

DEANNA J. MARTASIN
NOTARY PUBLIC
STATE OF KANSAS

My Commission Expires 1/25/2000

Printer's Fees 36.65

Additional Copies $_____

First Published In The Johnson County Sun, Friday, April 19, 1996.

ORDINANCE NO. 1575

AN ORDINANCE GRANTING A RIGHT-OF-WAY EASEMENT FOR SANITARY SEWER LINES ACROSS IRONHORSE GOLF COURSE PROPERTY TO JOHNSON COUNTY WASTEWATER DISTRICT.

Be it ordained by the Governing Body of the City of Leawood:

Section 1. That the City of Leawood, Kansas, does hereby grant and convey to Johnson County Wastewater District a Right-of-Way to lay, construct, maintain, alter, repair, replace, and operate one or more sewer lines and all appurtenances convenient for the collection of sanitary sewage, together with the right of ingress and egress, over and through the following premises in the County of Johnson in the State of Kansas, to wit:

A tract of land 50 feet in width across a part of the North 50 acres of the NW ¼ of Section 10, Township 14, Range 25, now in the City of Leawood, Johnson County, Kansas, lying 25 feet on each side of the following described centerline: Commencing at the Northwest corner of the NW ¼ of said Section 10; thence S 2° 04' 56" E, along the West line of the NW ¼ of said Section 10, a distance of 784-71 feet; thence N 85° 32' 33" E, a distance of 330.89 feet, to point "A", said point also being the true point of beginning of subject tract; thence S 10° 29' 13" E, a distance of 30.56 feet, to point "B", of which a tract of land 15 feet in width, lying 7.50 feet on each side of the above described centerline shall be a permanent easement and the remainder shall be a temporary construction easement . . . and also . . . a tract of land 50 feet in width across a part of the North 50 acres of the NW ¼ of said Section 10, lying 25 feet on each side of the following described centerline: Beginning at said point "B"; thence S 10° 29' 13" E, a distance of 25 feet, which shall be a temporary construction easement . . . and also . . . a tract of land 50 feet in width across a part of the North 50 acres of the NW ¼ of said Section 10, lying 25 feet on each side of the following described centerline: Commencing at said point "A"; thence N 85° 32' 33" E, a distance of 4.84 feet; thence N 77° 58' 31" E, a distance of 108.65 feet; thence N 46° 19' 17" E, a distance of 41.63 feet; thence N 54° 07' 10" E, a distance of 174.51 feet; thence N 36° 38' 27" E, a distance of 120.94 feet; thence N 82° 03' 04" E, a distance of 194.18 feet; thence S 87° 12' 25" E, a distance of 95.23 feet; thence N 80° 37' 59" E, a distance of 63.98 feet; thence N 78° 30' 26" E, a distance of 162.86 feet; thence N 37° 01' 36" E, a distance of 50.03 feet, to the true point of beginning of subject tract; thence S 51° 49' 01" E, a distance of 118.46 feet, to point "C", of which a tract of land 15 feet in width, lying 7.50 feet on each side of the above described centerline shall be a permanent easement and the remainder shall be a temporary construction easement . . . and also . . . a tract of land 50 feet in width across a part of the North 50 acres of the NW ¼ of said Section 10, lying 25 feet on each side of the following described centerline: Beginning at said point "C"; thence S 51° 49' 01" E, a distance of 25 feet, which shall be a temporary construction easement.

Section 2. That a copy of said Right-of-Way Grant is attached hereto and thereby incorporated by reference.

Section 3. That this ordinance shall take effect and be in force from and after its publication in the official City newspaper.

Passed by the Council the 15th day of April, 1996.

Approved by the Mayor the 15th day of April, 1996.

(SEAL)

(s) Marcia Rinehart
Marcia Rinehart,
Mayor

Attest:

(s) Martha Helzer
Martha Helzer
City Clerk
by Fran Kessler
Asst. City Clerk

APPROVED FOR FORM:

(s) R. S. Wetzler
R. S. Wetzler,
City Attorney (16112 1F-JC)

ORDINANCE NO. 1574 C

AN ORDINANCE RELATING TO REIMBURSEMENT OF EXPENSES, INCLUDING MILEAGE, OF CITY OFFICIALS AND EMPLOYEES; AND REPEALING EXISTING SECTION OF THE CODE OF THE CITY OF LEAWOOD.

Be it ordained by the Governing Body of the City of Leawood:

Section 1. Code Amended. That Section 1-212 of the Code of the City of Leawood is hereby amended to read as follows:

1-212. REIMBURSEMENT OF EXPENSES OF CITY OFFICIALS AND EMPLOYEES.

(a) Whenever a city official, councilmember, committee member or employee shall be directed or ordered in connection with city affairs to attend any hearings or to represent the city in any matter or appear before any board, commission, or court, such person shall be reimbursed reasonable, necessary and proper travel expenses so advanced by said person; and shall be reimbursed for such other expenses actually advanced as are reasonable, necessary, and proper.

(b) Employees of the city, required to use their personal automobile in the conduct of official city affairs, shall be reimbursed for their actual mileage at a rate equal to the rate annually fixed by the Internal Revenue Service for business mileage. The Director of Finance shall publish the annual rate to all eligible recipients by separate correspondence. Said funds shall be paid upon direction of the appropriate department head from either a special mileage reimbursement fund or petty cash as the department head so directs.

Section 2. Repeal of Existing Section. That existing Section 1-212 of the Code of the City of Leawood is hereby repealed.

Section 3. Take Effect. That this ordinance shall take effect and be in force from and after its publication in the official City newspaper.

Passed by the Council the 15th day of April, 1996.

Approved by the Mayor the 15th day of April, 1996.

(S E A L)

Marcia Rinehart
Marcia Rinehart Mayor

Attest:

Martha Heizer by Fran Kessler Asst City Clerk
Martha Heizer City Clerk

APPROVED FOR FORM:
R.S. Wetzler City Attorney

First Published in The Johnson County Sun, Friday, April 19, 1996.
ORDINANCE NO. 1574 C
AN ORDINANCE RELATING TO REIMBURSEMENT OF EXPENSES, INCLUDING MILEAGE, OF CITY OFFICIALS AND EMPLOYEES; AND REPEALING EXISTING SECTION OF THE CODE OF THE CITY OF LEAWOOD.
Be it ordained by the Governing Body of the City of Leawood:
Section 1. Code Amended. That Section 1-212 of the Code of the City of Leawood is hereby amended to read as follows:
1-212. REIMBURSEMENT OF EXPENSES OF CITY OFFICIALS AND EMPLOYEES.
(a) Whenever a city official, councilmember, committee member or employee shall be directed or ordered in connection with city affairs to attend any hearings or to represent the city in any matter or appear before any board, commission, or court, such person shall be reimbursed reasonable, necessary and proper travel expenses so advanced by said person; and shall be reimbursed for such other expenses actually advanced as are reasonable, necessary, and proper.
(b) Employees of the city, required to use their personal automobile in the conduct of official city affairs, shall be reimbursed for their actual mileage at a rate equal to the rate annually fixed by the Internal Revenue Service for business mileage. The Director of Finance shall publish the annual rate to all eligible recipients by separate correspondence. Said funds shall be paid upon direction of the appropriate department head from either a special mileage reimbursement fund or petty cash as the department head so directs.
Section 2. Repeal of Existing Section. That existing Section 1-212 of the Code of the City of Leawood is hereby repealed.
Section 3. Take Effect. That this ordinance shall take effect and be in force from and after its publication in the official City newspaper.
Passed by the Council the 15th day of April, 1996.
Approved by the Mayor the 15th day of April, 1996.
(SEAL)
(s) Marcia Rinehart
Marcia Rinehart,
Mayor
Attest:
(s) Martha Heizer
Martha Heizer,
City Clerk
by Fran Kessler,
Asst. City Clerk
APPROVED FOR FORM:
(s) R. S. Wetzler
R. S. Wetzler,
City Attorney (16111 1F-JC)

AFFIDAVIT OF PUBLICATION

STATE OF KANSAS, JOHNSON COUNTY,ss: Georgiann Thacker being first Duly sworn, Deposes and says: That she is legal publications manager of THE JOHNSON COUNTY SUN, a semi-weekly newspaper printed in the State of Kansas, and published in and of general circulation in JOHNSON COUNTY, Kansas, and that said newspaper is not a trade, religious or fraternal publication.

Said newspaper is a semi-weekly published at least weekly 50 times a year; has been so published continuously and uninterruptedly in said county and state for a period of more than five years prior to the first publication of said notice; and has been admitted at the post office of SHAWNEE MISSION, KANSAS in said County as a second class matter.

That the attached notice is a true copy thereof and was published in the regular and entire issue of said newspaper for one **consecutive** day **(weeks/days), the first publication thereof being made as aforesaid on the** 19th **day of** April **19**96**, with subsequent publication being made on the following dates:**

_____, 19____ _____, 19____

_____, 19____ _____, 19____

Georgiann Thacker

Subscribed and sworn to before me this 19th **day of** April **19**96

Deanna J. Martasin
NOTARY PUBLIC

DEANNA J. MARTASIN
NOTARY PUBLIC
STATE OF KANSAS

My Commission Expires 1/25/2000

Printer's Fees 23.45

Additional Copies $_____

ORDINANCE NO. 1573

AN ORDINANCE GRANTING PERMANENT DRAINAGE EASEMENTS TO SECURED INVESTMENT ADVISORS DEVELOPMENT, INC., IN THE AREA OF THE VINTAGE APARTMENTS AT APPROXIMATELY 121ST AND ROE AVENUE IN OVERLAND PARK; AND REPEALING ORDINANCE NO. 1555 PASSED BY THE CITY COUNCIL DECEMBER 18, 1995.

Be it ordained by the Governing Body of the City of Leawood:

Section 1. That the City of Leawood, Kansas, does hereby grant 2 permanent drainage easements to Secured Investment Advisors Development, Inc., more particularly described as follows, to wit:

A tract of land 50 feet in width across a part of Tract "E", LEAWOOD GREENWAY AND PARKS, a subdivision of land now in the Cities of Leawood and Overland Park, Johnson County, Kansas, lying 25 feet on each side of the following described centerline: Commencing at the most Northerly Northwest corner of said Tract "E"; thence S 2° 07'32" E, along the Westerly line of said Tract "E", a distance of 547.85 feet, to the true point of beginning of subject tract; thence N 87°05' 11" E, a distance of 219.84 feet; thence N 54° 09'30" E, a distance of 66.91 feet, to point "A", of which a tract of land 15 feet in width, lying 7.50 feet on each side of the above described centerline, shall be a permanent easement and the remainder shall be a temporary construction easement...and also...a tract of land 50 feet in width across a part of said Tract "E", lying 25 feet on each side of the following described centerline: Beginning at said point "A"; thence N 54° 09'30" E, a distance of 25 feet, which shall be a temporary construction easement.

AND

A tract of land 50 feet in width across a part of Tract "E", LEAWOOD GREENWAY AND PARKS, a subdivision of land now in the Cities of Leawood and Overland Park, Johnson County, Kansas, lying 25 feet on each side of the following described centerline: Commencing at the most Westerly Northwest corner of said Tract "E"; thence N 87° 52'28" E, along the Northerly line of said Tract "E", a distance of 32.46 feet, to the true point of beginning of subject tract; thence S 1° 53'50" W, a distance of 205.51 feet; thence S 24° 36'10" E, a distance of 98.47 feet, to point "A", of which a tract of land 15 feet in width lying 7.50 feet on each side of the above described centerline shall be a permanent easement and the

remainder shall be a temporary construction easement... and also...a tract of land 50 feet in width across a part of said Tract "E", lying 25 feet on each side of the following described centerline: Beginning at said point "A"; thence S 24°36'10" E, a distance of 25 feet, which shall be a temporary construction easement.

Section 2. That Ordinance No. 1555 passed by the City Council December 18, 1995, is hereby repealed.

Section 3. That copies of said easements are attached hereto and thereby incorporated by reference.

Section 4. That this ordinance shall take effect and be in force from and after its publication in the official City newspaper.

Passed by the Council the 1st day of April, 1996.

Approved by the Mayor the 1st day of April, 1996.

(S E A L)

Marcia Rinehart
Marcia Rinehart Mayor

Attest:

Martha Heizer
Martha Heizer City Clerk

APPROVED FOR FORM:
R.S. Metzler City Attorney

ORD1573

Publication Fees: $28.72

The Legal Record
600 E. Santa Fe, Suite 4
Olathe, KS 66061-3700

CITY OF LEAWOOD
ATTN: MARTHA HEIZER
4800 TOWN CENTER DR
LEAWOOD, KS 66211

Proof of Publication

STATE OF KANSAS, JOHNSON COUNTY, SS;
Tammy Schwien, of lawful age, being first duly sworn, deposes and says that she is Legal Notices Administrator of The Legal Record which is a newspaper printed in the State of Kansas, published in and of general paid circulation on a weekly, monthly or yearly basis in Johnson County, Kansas, is not a trade, religious or fraternal publication, is published at least weekly fifty (50) times a year, has been so published continuously and uninterrupted in said County and State for a period of more than five (5) years prior to the first publication of the notice attached, and has been admitted at the post office as second class matter.
That a notice was published in all editions of the regular and entire issue for the following subject matter (also identified by the following case number, if any) for 1 consecutive week(s), as follows:

ORDINANCE NO. 1573--4/2/96

Tammy Schwien
Legal Notices Administrator

Subscribed and sworn to before me on this date:
APRIL 3, 1996

Debra Dziadura
Notary Public

DEBRA DZIADURA
Notary Public - State of Kansas

My appointment expires: August 21, 1999.

$28.72

ORDINANCE NO. 1573

First published in The Legal Record, Tuesday, April 2, 1996.

ORDINANCE NO. 1573

AN ORDINANCE GRANTING PERMANENT DRAINAGE EASEMENTS TO SECURED INVESTMENT ADVISORS DEVELOPMENT, INC., IN THE AREA OF THE VINTAGE APARTMENTS AT APPROXIMATELY 121ST AND ROE AVENUE IN OVERLAND PARK; AND REPEALING ORDINANCE NO. 1555 PASSED BY THE CITY COUNCIL DECEMBER 18, 1995.

Be it ordained by the Governing Body of the City of Leawood:

Section 1. That the City of Leawood, Kansas, does hereby grant 2 permanent drainage easements to Secured Investment Advisors Development, Inc., more particularly described as follows, to wit:

A tract of land 50 feet in width across a part of Tract "E", LEAWOOD GREENWAY AND PARKS, a subdivision of land now in the Cities of Leawood and Overland Park, Johnson County, Kansas, lying 25 feet on each side of the following described centerline: Commencing at the most Northerly Northwest corner of said Tract "E"; thence S 2° 07'32" E, along the Westerly line of said Tract "E", a distance of 547.85 feet, to the true point of beginning of subject tract; thence N 87°05' 11" E, a distance of 219.84 feet; thence N 54°09'30" E, a distance of 66.91 feet, to point "A", of which a tract of land 15 feet in width, lying 7.50 feet on each side of the above described centerline, shall be a permanent easement and the remainder shall be a temporary construction easement...and also...a tract of land 50 feet in width across a part of said Tract "E", lying 25 feet on each side of the following described centerline: Beginning at said point "A"; thence N 54°09'30" E, a distance of 25 feet, which shall be a temporary construction easement.

AND

A tract of land 50 feet in width across a part of Tract "E", LEAWOOD GREENWAY AND PARKS, a subdivision of land now in the Cities of Leawood and Overland Park, Johnson County, Kansas, lying 25 feet on each side of the following described centerline: Commencing at the most Westerly Northwest corner of said Tract "E"; thence N 67° 52'28" E, along the Northerly line of said Tract "E", a distance of 32.46 feet, to the true point of beginning of subject tract; thence S 1°53'50" W, a distance of 205.51 feet; thence S 24°36'10" E, a distance of 98.47 feet, to point "A", of which a tract of land 15 feet in width lying 7.50 feet on each side of the above described centerline shall be a permanent easement and the remainder shall be a temporary construction easement... and also...a tract of land 50 feet in width across a part of said Tract "E", lying 25 feet on each side of the following described centerline: Beginning at said point "A"; thence S 24°36'10" E, a distance of 25 feet, which shall be a temporary construction easement.

Section 2. That Ordinance No. 1555 passed by the City Council December 18, 1995, is hereby repealed.

Section 3. That copies of said easements are attached hereto and thereby incorporated by reference.

Section 4. That this ordinance shall take effect and be in force from and after its publication in the official City newspaper.

Passed by the Council the 1st day of April, 1996.

Approved by the Mayor the 1st day of April, 1996.

(S E A L)

Marcia Rinehart Mayor

Attest:

Martha Heizer City Clerk

APPROVED FOR FORM:

R.S. Hetzler City Attorney

ORDINANCE NO. 1572

AN ORDINANCE ACCEPTING A QUITCLAIM DEED FOR RIGHT-OF-WAY REQUIRED FOR PHASE 1 OF COLLEGE BOULEVARD IMPROVEMENTS.

Be it ordained by the Governing Body of the City of Leawood:

Section 1. That the City of Leawood hereby accepts a deed for right-of-way described as follows:

From Hallbrook Farms Associates, L.P.: All that part of the Southeast 1/4 of Section 10, all in Township 13 South, Range 25 East, in the City of Leawood, Johnson County, Kansas, described as follows: Commencing at the southeast corner of the Southwest 1/4 of said Section 10; thence South 87 degrees, 51 minutes, 04 seconds West along the South line of said Southwest 1/4, (platted bearing equals South 87 degrees, 50 minutes, 04 seconds West), a distance of 391.82 feet to a point on the Easterly line of Tract "A" of the "LEAWOOD GREENWAY AND PARKS", a subdivision of land, all in said City, County and State; thence North 16 degrees, 36 minutes, 17 seconds East, along the Easterly Line of said Tract "A", a distance of 208.53 feet; thence North 48 degrees, 03 minutes, 35 seconds East a distance of 21.14 feet; thence North 66 degrees, 34 minutes, 13 seconds East a distance of 52.35 feet; thence North 81 degrees, 37 minutes, 21 seconds East a distance of 44.94 feet; thence North 21 degrees, 33 minutes, 23 seconds East a distance of 41.82 feet; thence North 49 degrees, 20 minutes, 48 seconds East a distance of 80.00 feet; thence North 51 degrees, 31 minutes, 00 seconds East a distance of 79.03 feet; thence North 56 degrees, 56 minutes, 46 seconds East a distance of 74.76 feet; thence North 58 degrees, 17 minutes, 50 seconds East a distance of 72.95 feet; thence North 65 degrees, 53 minutes, 21 seconds East a distance of 66.31 feet; thence South 71 degrees, 30 minutes, 40 seconds East a distance of 54.48 feet; thence North 34 degrees, 20 minutes, 21 seconds East a distance of 21.72 feet; thence North 50 degrees, 12 minutes, 35 seconds East a distance of 66.88 feet; thence North 83 degrees, 28 minutes, 11 seconds East a distance of 257.84 feet; thence South 14 degrees, 05 minutes, 43 seconds East a distance of 13.43 feet to a point on a circular curve concave to the Northwest and having a radius of 307.52 feet and a tangent bearing of South 9 degrees, 00 minutes, 48 seconds West; thence run along the arc of said circular curve through a central angle of 4 degrees, 32 minutes, 29 seconds for a distance of 24.37 feet; thence South 76 degrees, 37 minutes, 53 seconds East a distance of 85.00 feet to a point on a circular curve concave to the Northwest and having a radius of 392.47 feet and a tangent bearing of North 13 degrees, 30 minutes, 53 seconds East; thence run along the arc of said circular curve through

a central angle of 04 degrees, 15 minutes, 22 seconds for a distance of 29.16 feet to the TRUE POINT OF BEGINNING; FIRST COURSE, thence continuing along said last curve a distance of 10.00 feet; SECOND COURSE, thence South 82 degrees 12 minutes 05 seconds East, a distance of 40.46 feet; THIRD COURSE, thence South 07 degrees 47 minutes 56 seconds West, a distance of 10.00 feet; FOURTH COURSE, thence North 82 degrees 12 minutes 05 seconds West, a distance of 40.59 feet the POINT OF BEGINNING. The above tract contains .0093 acres. The above is part of Tract "B", HALLBROOK FARMS, SEVENTH PLAT, a subdivision in the City of Leawood, Johnson County, Kansas.

Section 2. That a copy of said deed is attached hereto and thereby incorporated by reference.

Section 3. That this ordinance shall take effect and be in force from and after its publication in the official City newspaper.

Passed by the Council the 1st day of April, 1996.

Approved by the Mayor the 1st day of April, 1996.

(S E A L)

Marcia Rinehart
Marcia Rinehart Mayor

Attest:

Martha Heizer
Martha Heizer City Clerk

APPROVED FOR FORM:
R.S. Wetzler City Attorney

ORD1572

Publication Fees: $29.82

The Legal Record
600 E. Santa Fe, Suite 4
Olathe, KS 66061-3700

CITY OF LEAWOOD
ATTN: MARTHA HEIZER
4800 TOWN CENTER DR
LEAWOOD, KS 66211

Proof of Publication

STATE OF KANSAS, JOHNSON COUNTY, SS;
Tammy Schwien, of lawful age, being first duly sworn, deposes and says that she is Legal Notices Administrator of The Legal Record which is a newspaper printed in the State of Kansas, published in and of general paid circulation on a weekly, monthly or yearly basis in Johnson County, Kansas, is not a trade, religious or fraternal publication, is published at least weekly fifty (50) times a year, has been so published continuously and uninterrupted in said County and State for a period of more than five (5) years prior to the first publication of the notice attached, and has been admitted at the post office as second class matter.
That a notice was published in all editions of the regular and entire issue for the following subject matter (also identified by the following case number, if any) for 1 consecutive week(s), as follows:

ORDINANCE NO. 1572--4/2/96

Tammy Schwien
Legal Notices Administrator

Subscribed and sworn to before me on this date:
APRIL 3, 1996

Debra Dziadura
Notary Public

DEBRA DZIADURA
Notary Public - State of Kansas

My appointment expires: August 21, 1999.

$29.82

ORDINANCE NO. 1572

First published in The Legal Record, Tuesday, April 2, 1996.

ORDINANCE NO. 1572

AN ORDINANCE ACCEPTING A QUITCLAIM DEED FOR RIGHT-OF-WAY REQUIRED FOR PHASE 1 OF COLLEGE BOULEVARD IMPROVEMENTS.

Be it ordained by the Governing Body of the City of Leawood:

Section 1. That the City of Leawood hereby accepts a deed for right-of-way described as follows:

From Hallbrook Farms Associates, L.P.: All that part of the Southeast 1/4 of Section 10, all in Township 13 South, Range 25 East, in the City of Leawood, Johnson County, Kansas, described as follows: Commencing at the southeast corner of the Southwest 1/4 of said Section 10; thence South 87 degrees, 51 minutes, 04 seconds West along the South line of said Southwest 1/4, (platted bearing equals South 87 degrees, 51 minutes, 04 seconds West), a distance of 391.82 feet to a point on the Easterly line of Tract "A" of the "LEAWOOD GREENWAY AND PARKS", a subdivision of land, all in said City, County and State; thence North 16 degrees, 36 minutes, 17 seconds East, along the Easterly line of said Tract "A", a distance of 208.53 feet; thence North 48 degrees, 03 minutes, 35 seconds East a distance of 21.14 feet; thence North 66 degrees, 34 minutes, 13 seconds East a distance of 52.35 feet; thence North 81 degrees, 37 minutes, 21 seconds East a distance of 44.94 feet; thence North 21 degrees, 33 minutes, 23 seconds East a distance of 41.82 feet; thence North 49 degrees, 20 minutes, 48 seconds East a distance of 80.00 feet; thence North 51 degrees, 31 minutes, 00 seconds East a distance of 79.03 feet; thence North 56 degrees, 56 minutes, 46 seconds East a distance of 74.76 feet; thence North 58 degrees, 17 minutes, 50 seconds East a distance of 72.95 feet; thence North 65 degrees, 53 minutes, 21 seconds East a distance of 56.31 feet; thence South 71 degrees, 30 minutes, 40 seconds East a distance of 54.48 feet; thence North 34 degrees, 20 minutes, 21 seconds East a distance of 21.72 feet; thence North 50 degrees, 12 minutes, 35 seconds East a distance of 66.88 feet; thence North 83 degrees, 28 minutes, 11 seconds East a distance of 257.84 feet; thence South 14 degrees, 05 minutes, 43 seconds East a distance of 13.43 feet to a point on a circular curve concave to the Northwest and having a radius of 307.52 feet and a tangent bearing of South 9 degrees, 00 minutes, 48 seconds West; thence run along the arc of said circular curve through a central angle of 4 degrees, 32 minutes, 29 seconds for a distance of 24.37 feet; thence South 76 degrees, 37 minutes, 53 seconds East a distance of 85.00 feet to a point on a circular curve concave to the Northwest and having a radius of 392.47 feet and a tangent bearing of North 13 degrees, 30 minutes, 53 seconds East; thence run along the arc of said circular curve through a central angle of 04 degrees, 15 minutes, 22 seconds for a distance of 29.16 feet to the TRUE POINT OF BEGINNING; FIRST COURSE, thence continuing along said last curve a distance of 10.00 feet; SECOND COURSE, thence South 82 degrees 12 minutes 05 seconds East, a distance of 40.46 feet; THIRD COURSE, thence South 07 degrees 47 minutes 56 seconds West, a distance of 10.00 feet; FOURTH COURSE, thence North 82 degrees 12 minutes 05 seconds West, a distance of 40.59 feet the POINT OF BEGINNING. The above tract contains .0093 acres. The above is part of Tract "B", HALLBROOK FARMS, SEVENTH PLAT, a subdivision in the City of Leawood, Johnson County, Kansas.

Section 2. That a copy of said deed is attached hereto and thereby incorporated by reference.

Section 3. That this ordinance shall take effect and be in force from and after its publication in the official City newspaper.

Passed by the Council the 1st day of April, 1996.

Approved by the Mayor the 1st day of April, 1996.

(S E A L)

Marcia Rinehart
Marcia Rinehart Mayor

Attest:

Martha Heizer
Martha Heizer City Clerk

APPROVED FOR FORM:
B.S. Wetzler
City Attorney

ORDINANCE NO. 1571 C

AN ORDINANCE RELATING TO URINATING OR DEFECATING IN PUBLIC.

Be it ordained by the Governing Body of the City of Leawood:

Section 1. Code Amended. That the Code of the City of Leawood is hereby amended by adding Section 11-210 to read as follows:

11-210. URINATING OR DEFECATING IN PUBLIC. No person shall urinate or defecate in or upon any street, sidewalk, alley, plaza, park, public building, public property, private parking lot or in any place open to the public or exposed to public view. Urination or defecation utilizing appropriate fixtures in any lavatory or other facility designed for the sanitary disposal of human waste shall not constitute an offense under this Section.

Violation of this Ordinance shall constitute a Class C violation.

Section 2. Take Effect. That this ordinance shall take effect and be in force from and after its publication in the official City newspaper.

Passed by the Council the 1st day of April, 1996.

Approved by the Mayor the 1st day of April, 1996.

(S E A L)

Marcia Rinehart Mayor

Attest:

Martha Heizer City Clerk

APPROVED FOR FORM:

R.B. Wetzler City Attorney

The Legal Record
600 E. Santa Fe, Suite 4
Olathe, KS 66061-3700

ORD1571C

Publication Fees: $14.36

CITY OF LEAWOOD
ATTN: MARTHA HEIZER
4800 TOWN CENTER DR
LEAWOOD, KS 66211

Proof of Publication

STATE OF KANSAS, JOHNSON COUNTY, SS;
Tammy Schwien, of lawful age, being first duly sworn, deposes and says that she is Legal Notices Administrator of The Legal Record which is a newspaper printed in the State of Kansas, published in and of general paid circulation on a weekly, monthly or yearly basis in Johnson County, Kansas, is not a trade, religious or fraternal publication, is published at least weekly fifty (50) times a year, has been so published continuously and uninterrupted in said County and State for a period of more than five (5) years prior to the first publication of the notice attached, and has been admitted at the post office as second class matter.
That a notice was published in all editions of the regular and entire issue for the following subject matter (also identified by the following case number, if any) for 1 consecutive week(s), as follows:

ORDINANCE NO. 1571 C--4/2/96

Tammy Schwien
Legal Notices Administrator

Subscribed and sworn to before me on this date:
APRIL 3, 1996

Debra Dziadura
Notary Public

DEBRA DZIADURA
Notary Public - State of Kansas

My appointment expires: August 21, 1999.

ORDINANCE NO. 1571 C

First published in The Legal Record, Tuesday, April 2, 1996.

ORDINANCE NO. 1571 C

AN ORDINANCE RELATING TO URINATING OR DEFECATING IN PUBLIC.

Be it ordained by the Governing Body of the City of Leawood:

Section 1. Code Amended. That the Code of the City of Leawood is hereby amended by adding Section 11-210 to read as follows:

11-210. URINATING OR DEFECATING IN PUBLIC. No person shall urinate or defecate in or upon any street, sidewalk, alley, plaza, park, public building, public property, private parking lot or in any place open to the public or exposed to public view. Urination or defecation utilizing appropriate fixtures in any lavatory or other facility designed for the sanitary disposal of human waste shall not constitute an offense under this Section.

Violation of this Ordinance shall constitute a Class C violation.

Section 2. Take Effect. That this ordinance shall take effect and be in force from and after its publication in the official City newspaper.

Passed by the Council the 1st day of April, 1996.

Approved by the Mayor the 1st day of April, 1996.

(S E A L)

Marcia Rinehart, Mayor

Attest:

Martha Heizer, City Clerk

APPROVED FOR FORM:

R.B. Wetzler, City Attorney

$14.36

ORDINANCE NO. 1570

AN ORDINANCE REZONING PROPERTY (HIGHLANDS RANCH) LOCATED AT 141ST & KENNETH FROM AG (AGRICULTURAL) TO RP-1 (PLANNED SINGLE FAMILY RESIDENTIAL) ; DIRECTING AMENDMENT OF THE OFFICIAL ZONING MAP OF THE CITY OF LEAWOOD, KANSAS; AND REINCORPORATING SAID ZONING MAP.

Be it ordained by the Governing Body of the City of Leawood:

Section 1. Rezoning of Property. That the real estate hereinafter described, to wit:

All that part of the Southeast Quarter of Section 34, Township 13, Range 25 in the City of Leawood, Johnson County, Kansas, more particularly described as follows: Commencing at the Northeast corner of said Southeast Quarter; thence South 02 degrees 01 minutes 15 seconds East along the East line of said Southeast Quarter a distance of 664.81 feet to the Northeast corner of the South one half of the North one half of said Southeast Quarter, said point being the Point of Beginning; thence continuing along said East line South 02 degrees 01 minutes 15 seconds East a distance of 361 feet; thence South 87 degrees 58 minutes 45 seconds West a distance of 403 feet; thence South 02 degrees 01 minutes 15 seconds East a distance of 349 feet; thence South 87 degrees 58 minutes 45 seconds East a distance of 396 feet; thence South 02 degrees 01 minutes 15 seconds East a distance of 844 feet to a point on the North line of WILLOW LAKE ESTATES, a subdivision in said city, county, and state; thence South 87 degrees 47 minutes 39 seconds West along said North line 759 feet; thence continuing along said North line North 55 degrees 28 minutes 02 seconds West a distance of 100 feet; thence continuing along said North line South 71 degrees 54 minutes 35 seconds West a distance of 36 feet to the Northwest corner of said WILLOW LAKES ESTATES, said point being on the Easterly line of OSAGE DOWNS, a subdivision in said city, county and state; thence North 02 degrees 00 minutes 32 seconds West along said Easterly line a distance of 837 feet to the Northeast corner thereof; thence North 02 degrees 00 minutes 32 seconds West a distance of 100 feet; thence South 87 degrees 47 minutes 39 seconds West a distance of 733 feet; thence North 02 degrees 00 minutes 32 seconds West a distance of 175 feet; thence South 87 degrees 47 minutes 39 seconds West a distance of 249 feet to a point on the West line of the Southeast Quarter of said Section 34; thence North 01 degrees 58 minutes 41 seconds West along said West line 388 feet to the Northwest corner of the South one half of the North one half of the Southeast Quarter of said Section 34; thence North 87 degrees 45 minues 27 seconds East a distance of 2654 feet to the Point of Beginning. Containing 52.46 acres.

now zoned AG, is hereby rezoned to RP-1.

Section 2. Official Zoning Map Amended. That the Director of Planning and Development of the City of Leawood, Kansas, is hereby directed to amend the Official Zoning Map of the City in accordance with the above and foregoing changes in zoning.

Section 3. Reincorporation of Official Zoning Map as Amended. That the Official Zoning Map of the City, as amended by the provisions of this ordinance, is hereby reincorporated and declared to be the Official Zoning Map of the City as provided for and adopted pursuant to the provisions of Section 2-2 of the "Leawood Development Ordinance".

Section 4. Take Effect. That this ordinance shall take effect and be in force from and after its publication in the official City newspaper.

Passed by the Council the 1st day of April, 1996.

Approved by the Mayor the 1st day of April, 1996.

(S E A L)

Marcia Rinehart
Marcia Rinehart Mayor

Attest:

Martha Heizer
Martha Heizer City Clerk

APPROVED FOR FORM:
R. S. Wetzler City Attorney

ORD1570

Publication Fees: $30.72

The Legal Record
600 E. Santa Fe, Suite 4
Olathe, KS 66061-3700

CITY OF LEAWOOD
ATTN: MARTHA HEIZER
4800 TOWN CENTER DR
LEAWOOD, KS 66211

Proof of Publication

STATE OF KANSAS, JOHNSON COUNTY, SS;
Tammy Schwien, of lawful age, being first duly sworn, deposes and says that she is Legal Notices Administrator of The Legal Record which is a newspaper printed in the State of Kansas, published in and of general paid circulation on a weekly, monthly or yearly basis in Johnson County, Kansas, is not a trade, religious or fraternal publication, is published at least weekly fifty (50) times a year, has been so published continuously and uninterrupted in said County and State for a period of more than five (5) years prior to the first publication of the notice attached, and has been admitted at the post office as second class matter.
That a notice was published in all editions of the regular and entire issue for the following subject matter (also identified by the following case number, if any) for 1 consecutive week(s), as follows:

ORDINANCE NO. 1570--4/2/96

Tammy Schwien
Legal Notices Administrator

Subscribed and sworn to before me on this date:
APRIL 3, 1996

Debra Dziadura
Notary Public

DEBRA DZIADURA
Notary Public - State of Kansas

My appointment expires: August 21, 1999.

$30.72

ORDINANCE NO. 1570

First published in The Legal Record, Tuesday, April 2, 1996.

ORDINANCE NO. 1570

AN ORDINANCE REZONING PROPERTY (HIGHLANDS RANCH) LOCATED AT 141ST & KENNETH FROM AG (AGRICULTURAL) TO RP-1 (PLANNED SINGLE FAMILY RESIDENTIAL) ; DIRECTING AMENDMENT OF THE OFFICIAL ZONING MAP OF THE CITY OF LEAWOOD, KANSAS; AND REINCORPORATING SAID ZONING MAP.

Be it ordained by the Governing Body of the City of Leawood:

Section 1. Rezoning of Property. That the real estate hereinafter described, to wit:

All that part of the Southeast Quarter of Section 34, Township 13, Range 25 in the City of Leawood, Johnson County, Kansas, more particularly described as follows: Commencing at the Northeast corner of said Southeast Quarter; thence South 02 degrees 01 minutes 15 seconds East along the East line of said Southeast Quarter a distance of 664.81 feet to the Northeast corner of the South one half of the North one half of said Southeast Quarter, said point being the Point of Beginning; thence continuing along said East line South 02 degrees 01 minutes 15 seconds East a distance of 361 feet; thence South 87 degrees 58 minutes 45 seconds West a distance of 403 feet; thence South 02 degrees 01 minutes 15 seconds East a distance of 349 feet; thence South 87 degrees 58 minutes 45 seconds East a distance of 396 feet; thence South 02 degrees 01 minutes 15 seconds East a distance of 844 feet to a point on the North line of WILLOW LAKE ESTATES, a subdivision in said city, county, and state; thence South 87 degrees 47 minutes 39 seconds West along said North line 759 feet; thence continuing along said North line North 55 degrees 28 minutes 02 seconds West a distance of 100 feet; thence continuing along said North line South 71 degrees 54 minutes 35 seconds West a distance of 36 feet to the Northwest corner of said WILLOW LAKES ESTATES, said point being on the Easterly line of OSAGE DOWNS, a subdivision in said city, county and state; thence North 02 degrees 00 minutes 32 seconds West along said Easterly line a distance of 837 feet to the Northeast corner thereof; thence North 02 degrees 00 minutes 32 seconds West a distance of 100 feet; thence South 87 degrees 47 minutes 39 seconds West a distance of 733 feet; thence North 02 degrees 00 minutes 32 seconds West a distance of 175 feet; thence South 87 degrees 47 minutes 39 seconds West a distance of 249 feet to a point on the West line of the Southeast Quarter of said Section 34; thence North 01 degrees 58 minutes 41 seconds West along said West line 388 feet to the Northwest corner of the South one half of the North one half of the Southeast Quarter of said Section 34; thence North 87 degrees 45 minues 27 seconds East a distance of 2654 feet to the Point of Beginning. Containing 52.46 acres.

now zoned AG, is hereby rezoned to RP-1.

Section 2. Official Zoning Map Amended. That the Director of Planning and Development of the City of Leawood, Kansas, is hereby directed to amend the Official Zoning Map of the City in accordance with the above and foregoing changes in zoning.

Section 3. Reincorporation of Official Zoning Map as Amended. That the Official Zoning Map of the City, as amended by the provisions of this ordinance, is hereby reincorporated and declared to be the Official Zoning Map of the City as provided for and adopted pursuant to the provisions of Section 2-2 of the "Leawood Development Ordinance".

Section 4. Take Effect. That this ordinance shall take effect and be in force from and after its publication in the official City newspaper.

Passed by the Council the 1st day of April, 1996.

Approved by the Mayor the 1st day of April, 1996.

(S E A L)

Marcia Rinehart
Marcia Rinehart Mayor

Attest:

Martha Heizer
Martha Heizer City Clerk

APPROVED FOR FORM:
R.S. Wetzler City Attorney

ORDINANCE NO. 1569 C

AN ORDINANCE AMENDING SECTIONS OF THE CODE OF THE CITY OF LEAWOOD TO REMOVE THE ASSISTANT CITY ATTORNEY POSITION, A NEW STAFF POSITION APPOINTED BY THE CITY ADMINISTRATOR; AND REPEALING EXISTING SECTIONS.

Be it ordained by the Governing Body of the City of Leawood:

Section 1. Code Amended. That Section 1-409 of the Code of the City of Leawood is hereby amended to read as follows:

1-409. ASSISTANT CITY ATTORNEY. It shall be the duty of the assistant city attorney to handle municipal court prosecutions and appeals and such other duties that may from time to time be assigned by the city administrator, and when expedient, to assist in the duties of the city attorney and to act as counselor to the police department and code enforcement division of the Planning and Development Department.

Section 2. Code Amended. That Section 9-109.1 of the Code of the City of Leawood is hereby amended to read as follows:

9-109.1. QUALIFICATIONS OF CITY ATTORNEY. The City Attorney shall be a resident of Johnson County, Kansas, a practicing attorney in and licensed by the State of Kansas, and shall have so practiced for a period of three years.

Section 3. Code Amended. That Section 9-109.2 of the Code of the City of Leawood is hereby amended to read as follows:

9-109.2. SELECTION OF CITY ATTORNEY. (a) On the occurrence of a vacancy in the office of the City Attorney and prior to the Mayor's appointment of the City Attorney as provided for in Section 1-404 of the Code, the Mayor, with the consent of the Council, shall appoint a selection committee to screen candidates for the position of City Attorney. The committee shall consist of one resident from each ward in the City; the person selected to serve on the committee shall be chosen by the two Councilmembers representing that ward. In addition the Mayor shall appoint, with the consent of the Council, three attorneys to serve as advisory members of the committee. The committee, consisting of seven persons, shall then interview and screen applicants for the position of City Attorney. The committee shall then present to the Mayor a list of three qualified individuals, from which list the Mayor shall appoint, by and with the consent of the City Council, the individual to serve as City Attorney.

(b) No attorney serving as an advisor to the committee shall be considered for, or be appointed to, the position of City Attorney.

Section 4. Code Amended. That Section 9-109.3 of the Code of the City of Leawood is hereby amended to read as follows:

9-109.3. PERIODIC EVALUATION OF MUNICIPAL JUDGE AND CITY ATTORNEY. The Governing Body shall meet with the Municipal Judge and City Attorney on a periodic basis, but not less than biannually, to review and evaluate their performance and to discuss matters of mutual concern relative to their work on behalf of the City. The evaluation process shall be conducted by the Governing Body pursuant to such process and criteria as it shall deem appropriate.

Section 5. Repeal of Existing Sections. That Sections 1-409, 9-109.1, 9-109.2, and 9-109.3 of the Code of the City of Leawood are hereby repealed. (Prior law: Sections 9-109.1, 9-109.2, and 9-109.3 from Ord. No. 1447C.)

Section 6. Take Effect. That this ordinance shall take effect and be in force from and after its publication in the official City newspaper.

Passed by the Council the 25th day of March, 1996.

Approved by the Mayor the 25th day of March, 1996.

(S E A L)

Marcia Rinehart
Marcia Rinehart Mayor

Attest:

Martha Heizer
Martha Heizer

APPROVED FOR FORM:
R.S. Wetzler

ORD1569C

Publication Fees: $29.27

The Legal Record
600 E. Santa Fe, Suite 4
Olathe, KS 66061-3700

CITY OF LEAWOOD
ATTN: MARTHA HEIZER
4800 TOWN CENTER DR
LEAWOOD, KS 66211

Proof of Publication

STATE OF KANSAS, JOHNSON COUNTY, SS;
Tammy Schwien, of lawful age, being first duly sworn, deposes and says that she is Legal Notices Administrator of The Legal Record which is a newspaper printed in the State of Kansas, published in and of general paid circulation on a weekly, monthly or yearly basis in Johnson County, Kansas, is not a trade, religious or fraternal publication, is published at least weekly fifty (50) times a year, has been so published continuously and uninterrupted in said County and State for a period of more than five (5) years prior to the first publication of the notice attached, and has been admitted at the post office as second class matter.
That a notice was published in all editions of the regular and entire issue for the following subject matter (also identified by the following case number, if any) for 1 consecutive week(s), as follows:

ORDINANCE NO. 1569C--3/26/96

Tammy Schwien
Legal Notices Administrator

Subscribed and sworn to before me on this date:
March 27, 1996

Debra Dziadura
Notary Public

DEBRA DZIADURA
Notary Public - State of Kansas

My appointment expires: August 21, 1999.

$29.27

ORDINANCE NO. 1569 C

First published in The Legal Record, Tuesday, March 26, 1996.

ORDINANCE NO. 1569 C

AN ORDINANCE AMENDING SECTIONS OF THE CODE OF THE CITY OF LEAWOOD TO REMOVE THE ASSISTANT CITY ATTORNEY POSITION, A NEW STAFF POSITION APPOINTED BY THE CITY ADMINISTRATOR; AND REPEALING EXISTING SECTIONS.

Be it ordained by the Governing Body of the City of Leawood:

Section 1. Code Amended. That Section 1-409 of the Code of the City of Leawood is hereby amended to read as follows:

1-409. ASSISTANT CITY ATTORNEY. It shall be the duty of the assistant city attorney to handle municipal court prosecutions and appeals and such other duties that may from time to time be assigned by the city administrator, and when expedient, to assist in the duties of the city attorney and to act as counselor to the police department and code enforcement division of the Planning and Development Department.

Section 2. Code Amended. That Section 9-109.1 of the Code of the City of Leawood is hereby amended to read as follows:

9-109.1. QUALIFICATIONS OF CITY ATTORNEY. The City Attorney shall be a resident of Johnson County, Kansas, a practicing attorney in and licensed by the State of Kansas, and shall have so practiced for a period of three years.

Section 3. Code Amended. That Section 9-109.2 of the Code of the City of Leawood is hereby amended to read as follows:

9-109.2. SELECTION OF CITY ATTORNEY. (a) On the occurrence of a vacancy in the office of the City Attorney and prior to the Mayor's appointment of the City Attorney as provided for in Section 1-404 of the Code, the Mayor, with the consent of the Council, shall appoint a selection committee to screen candidates for the position of City Attorney. The committee shall consist of one resident from each ward in the City; the person selected to serve on the committee shall be chosen by the two Councilmembers representing that ward. In addition the Mayor shall appoint, with the consent of the Council, three attorneys to serve as advisory members of the committee. The committee, consisting of seven persons, shall then interview and screen applicants for the position of City Attorney. The committee shall then present to the Mayor a list of three qualified individuals, from which list the Mayor shall appoint, by and with the consent of the City Council, the individual to serve as City Attorney.

(b) No attorney serving as an advisor to the committee shall be considered for, or be appointed to, the position of City Attorney.

Section 4. Code Amended. That Section 9-109.3 of the Code of the City of Leawood is hereby amended to read as follows:

9-109.3. PERIODIC EVALUATION OF MUNICIPAL JUDGE AND CITY ATTORNEY. The Governing Body shall meet with the Municipal Judge and City Attorney on a periodic basis, but not less than biannually, to review and evaluate their performance and to discuss matters of mutual concern relative to their work on behalf of the City. The evaluation process shall be conducted by the Governing Body pursuant to such process and criteria as it shall deem appropriate.

Section 5. Repeal of Existing Sections. That Sections 1-409, 9-109.1, 9-109.2, and 9-109.3 of the Code of the City of Leawood are hereby repealed. (Prior law: Sections 9-109.1, 9-109.2, and 9-109.3 from Ord. No. 1447C.)

Section 6. Take Effect. That this ordinance shall take effect and be in force from and after its publication in the official City newspaper.

Passed by the Council the 25th day of March, 1996.

Approved by the Mayor the 25th day of March, 1996.

(S E A L)

Marcia Rinehart Mayor

Attest:

Martha Heizer

APPROVED FOR FORM:

R.S. Wetzler

ORDINANCE NO. 1568

AN ORDINANCE REZONING PROPERTY (FORREST GREENS) LOCATED AT APPROXIMATELY 151ST AND MISSION ROAD FROM AG (AGRICULTURAL) TO RP-1 (PLANNED SINGLE FAMILY RESIDENTIAL) AND CP-1 (PLANNED NEIGHBORHOOD RETAIL); DIRECTING AMENDMENT OF THE OFFICIAL ZONING MAP OF THE CITY OF LEAWOOD, KANSAS; AND REINCORPORATING SAID ZONING MAP.

Be it ordained by the Governing Body of the City of Leawood:

Section 1. Rezoning of Property. That the real estate hereinafter described, to wit:

All that part of the North 50 acres of the NW1/4 of Section 10, Township 14, Range 25, now in the City of Leawood, Johnson County, Kansas, more particularly described as follows: Beginning at the Northwest corner of the NW1/4 of said Section 10; thence S 2°04'56" E, along the West line of the NW1/4 of said Section 10, a distance of 784.71 feet; thence N 85°32'33" E, a distance of 335.73 feet; thence N 77°58'31" E, a distance of 108.65 feet; thence N 46°19'17" E, a distance of 41.63 feet; thence N 54° 07'10" E, a distance of 174.51 feet; thence N 36°38'27" E, a distance of 120.94 feet; thence N 82°03'04" E, a distance of 194.18 feet; thence S 87°12'25" E, a distance of 95.23 feet; thence N 80°37'59" E, a distance of 63.98 feet; thence N 78°30'26" E, a distance of 162.86 feet; thence N 37°01'36" E, a distance of 232.94 feet; thence N 69°41'25" E, a distance of 36.90 feet; thence S 79°01'56" E, a distance of 112.97 feet; thence N 75°17'11" E, a distance of 45.89 feet; thence S 80°10'11" E, a distance of 96 feet; thence S 65°39'12" E, a distance of 94.18 feet; thence S 79°01'56" E, a distance of 371.62 feet; thence N 69°56'20" E, a distance of 194.48 feet; thence N 66°07'26" E, a distance of 98.78 feet; thence N 73°41' E, a distance of 100.64 feet; thence N 84°02'58" E, a distance of 183.43 feet, to a point on the East line of the NW1/4 of said Section 10; thence N 2°06'04" W, along the East line of the NW1/4 of said Section 10, a distance of 334.06 feet, to the Northeast corner thereof; thence S 87°38'42" W, along the North line of the NW1/4 of said Section 10, a distance of 2640.73 feet, to the point of beginning, except that part thereof described as follows: Beginning at the Northwest corner of the NW1/4 of said Section 10; thence S 2°04'56" E, along the West line of the NW1/4 of said Section 10, a distance of 649.58 feet; thence N 87°55'04" E, along a line perpendicular to the last described course, a distance of 40 feet; thence S 68°56'56" E, a distance of 61.22 feet; thence S 80°54'06" E, a distance of 148.92 feet; thence Northeasterly, along a curve to the left having a radius of 125 feet, a central angle of 59° 29'39" and whose initial tangent bearing is N 69°25'59" E, a distance of 129.80 feet, to a point of tangency; thence N 9° 56'20" E, a distance of 264.15 feet, to a point of curvature; thence Northeasterly, along a curve to the right having a radius of 350 feet and a central angle of 51°29'37", a distance

of 314.56 feet; thence N 28°34'03" W, a distance of 60.14 feet; thence N 2°21'18" W, a distance of 60 feet, to a point on the North line of the NW1/4 of said Section 10; thence S 87°38'42" W, along the North line of the NW1/4 of said Section 10, a distance of 539.17 feet, to the point of beginning, all subject to that part thereof dedicated for street purposes.

now zoned AG, is hereby rezoned to RP-1.

Section 2. Rezoning of Property. That the real estate hereinafter described, to wit:

All that part of the North 50 acres of the NW1/4 of Section 10, Township 14, Range 25, now in the City of Leawood, Johnson County, Kansas, more particularly described as follows: Beginning at the Northwest corner of the NW1/4 of said Section 10; thence S 2°04'56" E, along the West line of the NW1/4 of said Section 10, a distance of 649.58 feet; thence N 87°55'04" E, along a line perpendicular to the last described course, a distance of 40 feet; thence S 68°56'56" E, a distance of 61.22 feet; thence S 80°54'06" E, a distance of 148.92 feet; thence Northeasterly, along a curve to the left having a radius of 125 feet, a central angle of 59°29'39" and whose initial tangent bearing is N 69°25'59" E, a distance of 129.80 feet, to a point of tangency; thence N 9°56'20" E, a distance of 264.15 feet, to a point of curvature; thence Northeasterly, along a curve to the right having a radius of 350 feet and a central angle of 51°29'37", a distance of 314.56 feet; thence N 28°34'03" W, a distance of 60.14 feet; thence N 2°21'18" W, a distance of 60 feet, to a point on the North line of the NW1/4 of said Section 10; thence S 87° 38'42" W, along the North line of the NW1/4 of said Section 10, a distance of 539.17 feet, to the point of beginning, all subject to part thereof dedicated for street purposes.

now zoned AG, is hereby rezoned to CP-1.

Section 3. Official Zoning Map Amended. That the Director of Planning and Development of the City of Leawood, Kansas, is hereby directed to amend the Official Zoning Map of the City in accordance with the above and foregoing changes in zoning.

Section 4. Reincorporation of Official Zoning Map as Amended. That the Official Zoning Map of the City, as amended by the provisions of this ordinance, is hereby reincorporated and declared to be the Official Zoning Map of the City as provided for and adopted pursuant to the provisions of Section 2-2 of the "Leawood Development Ordinance".

Section 5. Take Effect. That this ordinance shall take effect and be in force from and after its publication in the official City newspaper.

Passed by the Council the 4th day of March, 1996.

Approved by the Mayor the 4th day of March, 1996.

(S E A L)

Marcia Rinehart
Marcia Rinehart Mayor

Attest:

Martha Heizer
Martha Heizer City Clerk

APPROVED FOR FORM:
R.S. Wetzler City Attorney

ORD1568

Publication Fees: $42.00

The Legal Record
600 E. Santa Fe, Suite 4
Olathe, KS 66061-3700

CITY OF LEAWOOD
ATTN: MARTHA HEIZER
4800 TOWN CENTER DR
LEAWOOD, KS 66211

Proof of Publication

STATE OF KANSAS, JOHNSON COUNTY, SS;
Tammy Schwien, of lawful age, being first duly sworn, deposes and says that she is Legal Notices Administrator of The Legal Record which is a newspaper printed in the State of Kansas, published in and of general paid circulation on a weekly, monthly or yearly basis in Johnson County, Kansas, is not a trade, religious or fraternal publication, is published at least weekly fifty (50) times a year, has been so published continuously and uninterrupted in said County and State for a period of more than five (5) years prior to the first publication of the notice attached, and has been admitted at the post office as second class matter.
That a notice was published in all editions of the regular and entire issue for the following subject matter (also identified by the following case number, if any) for 1 consecutive week(s), as follows:

ORDINANCE NO. 1568--3/5/96

Tammy Schwien
Legal Notices Administrator

Subscribed and sworn to before me on this date:
March 5, 1996

Debra Dziadura
Notary Public

DEBRA DZIADURA
Notary Public - State of Kansas

My appointment expires: August 21, 1999.

$42.00

ORDINANCE NO. 1568

First published in The Legal Record, Tuesday, March 5, 1996.

ORDINANCE NO. 1568

AN ORDINANCE REZONING PROPERTY (FORREST GREENS) LOCATED AT APPROXIMATELY 151ST AND MISSION ROAD FROM AG (AGRICULTURAL) TO RP-1 (PLANNED SINGLE FAMILY RESIDENTIAL) AND CP-1 (PLANNED NEIGHBORHOOD RETAIL); DIRECTING AMENDMENT OF THE OFFICIAL ZONING MAP OF THE CITY OF LEAWOOD, KANSAS; AND REINCORPORATING SAID ZONING MAP.

Be it ordained by the Governing Body of the City of Leawood:

Section 1. Rezoning of Property. That the real estate hereinafter described, to wit:

All that part of the North 50 acres of the NW1/4 of Section 10, Township 14, Range 25, now in the City of Leawood, Johnson County, Kansas, more particularly described as follows: Beginning at the Northwest corner of the NW1/4 of said Section 10; thence S 2°04'56" E, along the West line of the NW1/4 of said Section 10, a distance of 784.71 feet; thence N 85°32'33" E, a distance of 335.73 feet; thence N 77°58'31" E, a distance of 108.65 feet; thence N 46°19'17" E, a distance of 41.63 feet; thence N 54°07'10" E, a distance of 174.51 feet; thence N 36°38'27" E, a distance of 120.94 feet; thence N 82°03'04" E, a distance of 194.18 feet; thence S 87°12'25" E, a distance of 95.23 feet; thence N 80°37'59" E, a distance of 63.98 feet; thence N 78°30'26" E, a distance of 162.86 feet; thence N 37°01'36" E, a distance of 232.94 feet; thence N 69°41'25" E, a distance of 36.90 feet; thence S 79°01'56" E, a distance of 112.97 feet; thence N 75°17'11" E, a distance of 45.89 feet; thence S 80°10'11" E, a distance of 96 feet; thence S 65°39'12" E, a distance of 94.18 feet; thence S 79°01'56" E, a distance of 371.62 feet; thence N 69°56'20" E, a distance of 194.48 feet; thence N 66°07'26" E, a distance of 98.78 feet; thence N 73°41' E, a distance of 100.64 feet; thence N 84°02'58" E, a distance of 183.43 feet, to a point on the East line of the NW1/4 of said Section 10; thence N 2°06'04" W, along the East line of the NW1/4 of said Section 10, a distance of 334.06 feet, to the Northeast corner thereof; thence S 87°38'42" W, along the North line of the NW1/4 of said Section 10, a distance of 2640.73 feet, to the point of beginning, except that part thereof described as follows: Beginning at the Northwest corner of the NW1/4 of said Section 10; thence S 2°04'56" E, along the West line of the NW1/4 of said Section 10, a distance of 649.58 feet; thence N 87°55'04" E, along a line perpendicular to the last described course, a distance of 40 feet; thence S 68°56'56" E, a distance of 61.22 feet; thence S 80°54'06" E, a distance of 148.92 feet; thence Northeasterly, along a curve to the left having a radius of 125 feet, a central angle of 59° 29'39" and whose initial tangent bearing is N 69°25'59" E, a distance of 129.80 feet, to a point of tangency; thence N 9° 56'20" E, a distance of 264.15 feet, to a point of curvature; thence Northeasterly, along a curve to the right having a radius of 350 feet and a central angle of 51°29'37", a distance of 314.56 feet; thence N 28°34'03" W, a distance of 60.14 feet; thence N 2°21'18" W, a distance of 60 feet, to a point on the North line of the NW1/4 of said Section 10; thence S 87°38'42" W, along the North line of the NW1/4 of said Section 10, a distance of 539.17 feet, to the point of beginning, all subject to that part thereof dedicated for street purposes.

now zoned AG, is hereby rezoned to RP-1.

Section 2. Rezoning of Property. That the real estate hereinafter described, to wit:

All that part of the North 50 acres of the NW1/4 of Section 10, Township 14, Range 25, now in the City of Leawood, Johnson County, Kansas, more particularly described as follows: Beginning at the Northwest corner of the NW1/4 of said Section 10; thence S 2°04'56" E, along the West line of the NW1/4 of said Section 10, a distance of 649.58 feet; thence N 87°55'04" E, along a line perpendicular to the last described course, a distance of 40 feet; thence S 68°56'56" E, a distance of 61.22 feet; thence S 80°54'06" E, a distance of 148.92 feet; thence Northeasterly, along a curve to the left having a radius of 125 feet, a central angle of 59°29'39" and whose initial tangent bearing is N 69°25'59" E, a distance of 129.80 feet, to a point of tangency; thence N 9°56'20" E, a distance of 264.15 feet, to a point of curvature; thence Northeasterly, along a curve to the right having a radius of 350 feet and a central angle of 51°29'37", a distance of 314.56 feet; thence N 28°34'03" W, a distance of 60.14 feet; thence N 2°21'18" W, a distance of 60 feet, to a point on the North line of the NW1/4 of said Section 10; thence S 87° 38'42" W, along the North line of the NW1/4 of said Section 10, a distance of 539.17 feet, to the point of beginning, all subject to part thereof dedicated for street purposes.

now zoned AG, is hereby rezoned to CP-1.

Section 3. Official Zoning Map Amended. That the Director of Planning and Development of the City of Leawood, Kansas, is hereby directed to amend the Official Zoning Map of the City in accordance with the above and foregoing changes in zoning.

Section 4. Reincorporation of Official Zoning Map as Amended. That the Official Zoning Map of the City, as amended by the provisions of this ordinance, is hereby reincorporated and declared to be the Official Zoning Map of the City as provided for and adopted pursuant to the provisions of Section 2-2 of the "Leawood Development Ordinance".

Section 5. Take Effect. That this ordinance shall take effect and be in force from and after its publication in the official City newspaper.

Passed by the Council the 4th day of March, 1996.

Approved by the Mayor the 4th day of March, 1996.

(S E A L)

Marcia Rinehart
Marcia Rinehart Mayor

Attest:

Martha Heizer
Martha Heizer City Clerk

APPROVED FOR FORM:
R.S. Wetzler City Attorney

ORDINANCE NO. 1567 C

AN ORDINANCE RELATING TO THE CUTTING OF WEEDS AND VEGETATION, PROVIDING FOR NOTICE AND PROVIDING FOR CUTTING BY THE CITY OF LEAWOOD, AND PROVIDING FOR CHARGES THEREFOR.

BE IT ORDAINED BY THE GOVERNING BODY OF THE CITY OF LEAWOOD:

SECTION 1. Code Amended. That the Code of the City of Leawood is hereby amended by adding Sections 4-702 through 4-709 to Chapter 4 which read as follows:

4-702. WEEDS TO BE REMOVED. It shall be unlawful for any owner, agent, lessee, tenant, or other person occupying or having charge or control of any premises to permit weeds to remain upon said premises or any area between the property lines of said premises and the centerline of any adjacent street or alley, including but not specifically limited to sidewalks, streets, alleys, easements, rights-of-way and all other areas, public or private. All weeds as hereinafter defined are hereby declared a nuisance and are subject to abatement as hereinafter provided.

4-703. DEFINITIONS.

(a) Calendar Year as used herein, means that period of time beginning January 1 and ending December 31 of the same year.

(b) Weeds as used herein, means any of the following:

(1) Brush and woody vines shall be classified as weeds;

(2) Weeds and indigenous grasses which may attain such large growth as to become, when dry, a fire menace to adjacent improved property;

(3) Weeds which bear or may bear seeds of a downy or wingy nature;

(4) Weeds which are located in an area which harbors rats, insects, animals, reptiles, or any other creature which either may or does constitute a menace to health, public safety or welfare;

(5) Weeds and indigenous grasses on or about residential property which, because of its height, has a blighting influence on the neighborhood. Any such weeds and indigenous grasses shall be presumed to be blighting if they exceed 12 inches in height.

4-704. PUBLIC OFFICER; NOTICE TO REMOVE. The Director of Planning and Development shall designate a public officer to be charged with the administration and enforcement of this ordinance. The public officer or an authorized assistant shall notify in writing the owner, occupant or agent in charge of any premises in the city upon which weeds exist in violation of this ordinance, by mail or by personal service, once per calendar year. Such notice shall include the following:

(a) That the owner, occupant or agent in charge of the property is in violation of the city weed control law.

(b) That the owner, occupant, or agent in charge of the property is ordered to cut the weeds within ten days of the receipt of notice.

(c) That the owner, occupant or agent in charge of the property may request a hearing before the governing body or its designated representative within five days of the receipt of notice.

(d) That if the owner, occupant or agent in charge of the property does not cut the weeds, the city or its authorized agent will cut the weeds and assess the cost of the cutting, including a reasonable administrative fee, against the owner, occupant or agent in charge of the property.

(e) That the owner, occupant or agent in charge of the property will be given an opportunity to pay the assessment, and, if it is not paid, it will be added to the property tax as a special assessment.

(f) That no further notice shall be given prior to removal of weeds during the current calendar year.

(g) That the public officer should be contacted if there are any questions regarding the order.

If there is a change in the record owner of title to property subsequent to the giving of notice pursuant to this subsection, the city may not recover any costs or levy an assessment for the costs incurred by the cutting or destruction of weeds on such property unless the new record owner of title of such property is provided notice as required by this section.

4-705. ABATEMENT; ASSESSMENT OF COSTS.

(a) Upon the expiration of ten days after receipt of the notice required by Section 4-704, and in the event that the owner, occupant or agent in charge of the premises shall neglect or fail to comply with the requirements of Section 4-702, the public officer or an authorized assistant shall cause to be cut, destroyed and/or removed all such weeds and abate the nuisance created thereby at any time during the current calendar year.

(b) The public officer or an authorized assistant shall give notice to the owner, occupant or agent in charge of the premises by restricted mail of the costs of abatement of the nuisance. The notice shall state that payment of the costs is due and payable within 30 days following receipt of the notice.

(c) If the costs of removal or abatement remain unpaid after 30 days following receipt of notice, a record of the costs of cutting and destruction and/or removal shall be certified to the city clerk who shall cause such costs to be assessed against the particular lot or piece of land on which such weeds were so removed, and against such lots or pieces of land in front of or abutting on such street or alley on which such weeds were so removed. The city clerk shall certify the assessment to the county clerk at the time other special assessments are certified for spreading on the tax rolls of the county.

4-706. RIGHT OF ENTRY. The public officer, and the public officer's authorized assistants, employees, contracting agents or other representatives are hereby expressly authorized to enter upon private property at all reasonable hours for the purpose of cutting, destroying and/or removing such weeds in a manner not inconsistent with this ordinance.

4-707. UNLAWFUL INTERFERENCE. It shall be unlawful for any person to interfere with or to attempt to prevent the public officer or the public officer's authorized representative from entering upon any such lot or piece of ground or from proceeding with such cutting and destruction. Such interference shall constitute an ordinance violation.

4-708. NOXIOUS WEEDS.

(a) Nothing in this ordinance shall affect or impair the rights of the city under the provisions of Chapter 2, Article 13 of the Kansas Statutes Annotated, relating to the control and eradication of certain noxious weeds.

(b) For the purpose of this section, the term noxious weeds shall mean kudzu (Pueraria lobata), field bindweed (Convolvulus arvensis), Russian knapweed (Centaurea picris), hoary cress (Lepidium draba), Canada thistle (Cirsium arvense), quackgrass (Agropyron repens), leafy spurge (Euphorbia esula), burragweed (Franseria tomentosa and discolor), pignut (Hoffmannseggia densiflora), musk (nodding) thistle (Carduus nutans L.) and Johnson grass (Sorghum halepense).

4-709. EFFECTIVE SCOPE OF ORDINANCE. This ordinance shall be effective only for the current calendar year.

SECTION 2. Take Effect. That this ordinance shall take effect and be in force from and after its publication in the official City newspaper.

Passed by the Council the 20th day of February, 1996.

Approved by the Mayor the 20th day of February, 1996.

(S E A L)

Marcia Rinehart
Marcia Rinehart Mayor

Attest:

Martha Heizer
Martha Heizer City Clerk

APPROVED FOR FORM:
R.S. Wetzler City Attorney

AFFIDAVIT OF PUBLICATION

STATE OF KANSAS, JOHNSON COUNTY,ss: Georgiann Thacker being first Duly sworn, Deposes and says: That she is legal publications manager of THE JOHNSON COUNTY SUN, a semi-weekly newspaper printed in the State of Kansas, and published in and of general circulation in JOHNSON COUNTY, Kansas, and that said newspaper is not a trade, religious or fraternal publication.

Said newspaper is a semi-weekly published at least weekly 50 times a year; has been so published continuously and uninterruptedly in said county and state for a period of more than five years prior to the first publication of said notice; and has been admitted at the post office of SHAWNEE MISSION, KANSAS in said County as a second class matter.

That the attached notice is a true copy thereof and was published in the regular and entire issue of said newspaper for one consecutive day (weeks/days), the first publication thereof being made as aforesaid on the 23rd day of February 1996, with subsequent publication being made on the following dates:

_____, 19____ _____, 19____

_____, 19____ _____, 19____

Georgiann Thacker

Subscribed and sworn to before me this 23rd day of February 1996

Deanna J. Martasin
NOTARY PUBLIC

DEANNA J. MARTASIN
NOTARY PUBLIC
STATE OF KANSAS

My Commission Expires 1/25/2000

Printer's Fees 88.73

Additional Copies $_____

First published in The Johnson County Sun, Friday, February 23,1996

ORDINANCE NO. 1567 C

AN ORDINANCE RELATING TO THE CUTTING OF WEEDS AND VEGETATION, PROVIDING FOR NOTICE AND PROVIDING FOR CUTTING BY THE CITY OF LEAWOOD, AND PROVIDING FOR CHARGES THEREFOR.

BE IT ORDAINED BY THE GOVERNING BODY OF THE CITY OF LEAWOOD:

SECTION 1. Code Amended. That the Code of the City of Leawood is hereby amended by adding Sections 4-702 through 4-709 to Chapter 4 which read as follows:

4-702. WEEDS TO BE REMOVED. It shall be unlawful for any owner, agent, lessee, tenant, or other person occupying or having charge or control of any premises to permit weeds to remain upon said premises or any area between the property lines of said premises and the centerline of any adjacent street or alley, including but not specifically limited to sidewalks, streets, alleys, easements, rights-of-way and all other areas, public or private. All weeds as hereinafter defined are hereby declared a nuisance and are subject to abatement as hereinafter provided.

4-703. DEFINITIONS.

(a) Calendar Year as used herein, means that period of time beginning January 1 and ending December 31 of the same year.

(b) Weeds as used herein, means any of the following:

(1) Brush and woody vines shall be classified as weeds;

(2) Weeds and indigenous grasses which may attain such large growth as to become, when dry, a fire menace to adjacent improved property;

(3) Weeds which bear or may bear seeds of a downy or wingy nature;

(4) Weeds which are located in an area which harbors rats, insects, animals, reptiles, or any other creature which either may or does constitute a menace to health, public safety or welfare;

(5) Weeds and indigenous grasses on or about residential property which, because of its height, has a blighting influence on the neighborhood. Any such weeds and indigenous grasses shall be presumed to be blighting if they exceed 12 inches in height.

4-704. PUBLIC OFFICER; NOTICE TO REMOVE. The Director of Planning and Development shall designate a public officer to be charged with the administration and enforcement of this ordinance. The public officer or an authorized assistant shall notify in writing the owner, occupant or agent in charge of any premises in the city upon which weeds exist in violation of this ordinance, by mail or by personal service, once per calendar year. Such notice shall include the following:

(a) That the owner, occupant or agent in charge of the property is in violation of the city weed control law.

(b) That the owner, occupant, or agent in charge of the property is ordered to cut the weeds within ten days of the receipt of notice.

(c) That the owner, occupant or agent in charge of the property may request a hearing before the governing body or its designated representative within five days of the receipt of notice.

(d) That if the owner, occupant or agent in charge of the property does not cut the weeds, the city or its authorized agent will cut the weeds and assess the cost of the cutting, including a reasonable administrative fee, against the owner, occupant or agent in charge of the property.

(e) That the owner, occupant or agent in charge of the property will be given an opportunity to pay the assessment, and, if it is not paid, it will be added to the property tax as a special assessment.

(f) That no further notice shall be given prior to removal of weeds during the current calendar year.

(g) That the public officer should be contacted if there are any questions regarding the order.

If there is a change in the record owner of title to property subsequent to the giving of notice pursuant to this subsection, the city may not recover any costs or levy an assessment for the costs incurred by the cutting or destruction of weeds on such property unless the new record owner of title of such property is provided notice as required by this section.

4-705. ABATEMENT; ASSESSMENT OF COSTS.

(a) Upon the expiration of ten days after receipt of the notice required by Section 4-704, and in the event that the owner, occupant or agent in charge of the premises shall neglect or fail to comply with the requirements of Section 4-702, the public officer or an authorized assistant shall cause to be cut, destroyed and/or removed all such weeds and abate the nuisance created thereby at any time during the current calendar year.

(b) The public officer or an authorized assistant shall give notice to the owner, occupant or agent in charge of the premises by restricted mail of the costs of abatement of the nuisance. The notice shall state that payment of the costs is due and payable within 30 days following receipt of the notice.

(c) If the costs of removal or abatement remain unpaid after 30 days following receipt of notice, a record of the costs of cutting and destruction and/or removal shall be certified to the city clerk who shall cause such costs to be assessed against the particular lot or piece of land on which such weeds were so removed, and against such lots or pieces of land in front of or abutting on such street or alley on which such weeds were so removed. The city clerk shall certify the assessment to the county clerk at the time other special assessments are certified for spreading on the tax rolls of the county.

4-706. RIGHT OF ENTRY. The public officer, and the public officer's authorized assistants, employees, contracting agents or other representatives are hereby expressly authorized to enter upon private property at all reasonable hours for the purpose of cutting, destroying and/or removing such weeds in a manner not inconsistent with this ordinance.

4-707. UNLAWFUL INTERFERENCE. It shall be unlawful for any person to interfere with or to attempt to prevent the public officer or the public officer's authorized representative from entering upon any such lot or piece of ground or from proceeding with such cutting and destruction. Such interference shall constitute an ordinance violation.

4-708. NOXIOUS WEEDS.

(a) Nothing in this ordinance shall affect or impair the rights of the city under the provisions of Chapter 2, Article 13 of the Kansas Statutes Annotated, relating to the control and eradication of certain noxious weeds.

(b) For the purpose of this section, the term noxious weeds shall mean kudzu (Pueraria lobata), field bindweed (Convolvulus arvensis), Russian knapweed (Centaurea picris), hoary cress (Lepidium draba), Canada thistle (Cirsium arvense), quackgrass (Agropyron repens), leafy spurge (Euphorbia esula), burragweed (Franseria tomentosa and discolor), pignut (Hoffmannseggia densiflora), musk (nodding) thistle (Carduus nutans L.) and Johnson grass (Sorghum halepense).

4-709. EFFECTIVE SCOPE OF ORDINANCE. This ordinance shall be effective only for the current calendar year.

SECTION 2. Take Effect. That this ordinance shall take effect and be in force from and after its publication in the official City newspaper.

Passed by the Council the 20th day of February, 1996.

Approved by the Mayor the 20th day of February, 1996.

(S E A L)

Marcia Rinehart
Marcia Rinehart Mayor

Attest:

Martha Heizer
Martha Heizer City Clerk

APPROVED FOR FORM:
R.S. Wetzler City Attorney

(15884 - 1F-JC)

ORDINANCE NO. 1566

AN ORDINANCE AUTHORIZING AND PROVIDING FOR THE ISSUANCE AND DELIVERY OF TEMPORARY NOTES, PROJECT 146 (TOWN CENTER PLAZA), OF THE CITY OF LEAWOOD, KANSAS, IN THE PRINCIPAL AMOUNT OF $3,200,000 TO PROVIDE TEMPORARY FINANCING OF THE COST OF CONSTRUCTION OF 117TH STREET FROM ITS INTERSECTION WITH TOWN CENTER DRIVE WEST TO NALL AVENUE, SIGNALIZATION OF THE INTERSECTIONS OF NALL AND 117TH STREET, 119TH STREET AND HAWTHORNE, TOWN CENTER DRIVE AND ROE AVENUE, TOWN CENTER DRIVE AND NALL AVENUE AND 119TH STREET AT ROSEWOOD, CERTAIN UTILITY MAIN IMPROVEMENTS, BURIAL OF OVERHEAD POWER LINES, THE WIDENING AND UTILITY RELOCATIONS OF NALL AVENUE, 119TH STREET, ROE, AND TOWN CENTER DRIVE FROM ROE TO 117TH STREET, THE WIDENING OF TOWN CENTER DRIVE FROM 117TH STREET TO NALL AVENUE, SIGNALIZATION OF THE INTERSECTION OF TOWN CENTER DRIVE AND 117TH STREET OR TOWN CENTER DRIVE AND LEAWOOD CITY HALL/LEAWOOD LIBRARY, AND THE OVERLAY OF 119TH STREET FROM ROE AVENUE TO NALL AVENUE AND ROE AVENUE FROM TOWN CENTER DRIVE TO 119TH STREET IN THE CITY OF LEAWOOD.

WHEREAS, pursuant to K.S.A. 12-6a01, et seq., as amended, and Resolution No. 1238, the Governing Body of the City of Leawood, Kansas (the "City") has heretofore authorized the following described improvement project within the City, to wit: construction of 117th Street from its intersection with Town Center Drive west to Nall Avenue; signalization of various intersections (as hereinbefore outlined); certain utility main improvements, burial of overhead power lines; widening and utility relocations of various streets (as hereinbefore outlined); and the overlay of 119th Street from Roe Avenue to Nall Avenue and Roe Avenue from Town Center Drive to 119th Street (the "Project") at an estimated cost of $4,100,000; and

WHEREAS, the Project has been commenced and the City has heretofore issued its Temporary Notes, Project 146 (Town Center Plaza), dated March 1, 1996, in the principal amount of $900,000 (the "Prior Notes") to provide funds to pay the costs of the Project heretofore incurred by the City, said Prior Notes to become due and payable in the immediate future, and the City has incurred or expects to incur additional costs payable within the next nine months in the amount of $2,300,000; and

WHEREAS, the City is authorized by law and in particular K.S.A. 10-123, as amended, to issue temporary notes of the City to provide funds to redeem and pay the Prior Notes and to pay the costs of the Project as the same become due and payable.

NOW, THEREFORE, BE IT ORDAINED BY THE GOVERNING BODY OF THE CITY OF LEAWOOD,

KANSAS, AS FOLLOWS:

Section One. Authorization of Notes. That in order to provide funds to redeem and pay the Prior Notes and to pay costs of the Project now due or to become due in the immediate future, including necessary engineering, legal and incidental costs, there shall be issued and the City is hereby authorized to issue temporary notes of the City, designated City of Leawood, Kansas, Temporary Notes, Project 146 (Town Center Plaza), in the aggregate principal amount of Three Million Two Hundred Thousand Dollars ($3,200,000) (the "Notes"). The amount of the Notes together with other temporary notes heretofore issued to finance the Project which remain outstanding does not exceed the total estimated costs of said Project.

Section Two. Terms of the Notes. Said issue of Notes shall consist of bearer notes numbered 1 through 32 inclusive, each in the denomination of $100,000. Each of said Notes shall be dated March 1, 1996, shall mature by their stated terms and become due and payable on November 21, 1996. The Notes shall bear interest from their dated date, payable at maturity or upon redemption prior thereto as herein provided, at a rate of interest of 3.40% per annum (computed on the basis of actual days elapsed and a 360-day year composed of twelve 30-day months). The Notes shall be subject to redemption at the option of the City upon notice as hereinafter provided and shall be redeemed and cancelled contemporaneously with the issuance of general obligation improvement bonds of the City issued in lieu thereof to provide permanent financing of the Project.

Both principal of and interest on said Notes shall be payable in lawful money of the United States of America by check or draft at the office of the City Treasurer of the City upon presentation and surrender of said Notes.

The City reserves the right to redeem and pay said Notes, in whole or in part (and if in part in denominations of $100,000 selected by the City in its sole discretion), at any date prior to the stated maturity of said Notes by notice thereof given in writing by first class mail to the original purchaser of the Notes and to any known holder of the Notes or by the publication of such notice at least one time in a newspaper published or of general circulation in the metropolitan Kansas City area, and payment of said Notes, such publication of such notice or mailing of written notification of redemption to the original purchaser and the known holder to be at least ten days prior to the redemption date fixed in such notice. Notice of such redemption having been given as aforesaid, interest shall cease to accrue on said Notes from and after the redemption date.

Section Three. Security for the Notes. The full faith, credit and resources of the City of Leawood, Kansas, shall be and the same are hereby irrevocably pledged for the prompt payment of the principal of and interest on the Notes.

The Governing Body of the City shall make provisions for the payment of said Notes by the issuance of renewal notes or general obligation bonds of the City to provide permanent financing of the Project upon the completion thereof. If said bonds shall not be so issued and the Notes shall not be so paid, the Governing Body shall levy and collect special assessments on property benefitted by the Project, and to the extent said special assessments shall not be so collected, the Governing Body shall levy and collect a tax upon all taxable tangible property within the territorial limits of the City in an amount sufficient to pay the principal of and interest on said Notes as the same become due and payable.

Section Four. Form of Notes. Each of said Notes shall be in customary form as provided by law, shall be signed by the Mayor and attested by the City Clerk of the City and shall have the seal of said City affixed thereto.

Section Five. Execution and Delivery. The Mayor and City Clerk of the City are hereby authorized and directed to prepare and execute the Notes herein authorized in the form and substance hereinbefore described and as provided by law and to procure the proper registration in the office of the City Clerk and in the office of the Treasurer of the State of Kansas, and when so executed and registered, said Notes shall be countersigned by the City Clerk and delivered to United Missouri Bank, the original purchaser thereof, upon payment of the purchase price therefor which shall not be less than 99.625% of the principal amount thereof plus accrued interest to the date of delivery thereof to the original purchaser thereof.

Section Six. Disposition of Proceeds. The proceeds of the sale of the Notes shall be deposited with the City Treasurer. The sum of $900,000 of such proceeds shall be used to redeem and retire the Prior Notes, and the balance of such proceeds shall be deposited in a special fund created for the purpose of paying costs and expenses of the Project.

Section Seven. Tax Covenants. The City covenants and agrees that (1) it will comply with each and every provision of Section 103 and Sections 141 through 150 of the Internal Revenue Code of 1986, as amended (the "Code"), that is or may become applicable to the Notes, necessary to maintain the exclusion from gross income for federal income tax purposes of the interest on the Notes, including but not limited to any provisions requiring the rebate of earnings on amounts held in funds or accounts created with respect to the Notes and (2) it will not use or permit the use of any of the proceeds of the Notes or other funds of the City nor take or permit any other action, or fail to take any action, if any such action or failure to act would adversely affect the exclusion from gross income for federal income tax purposes of the interest on the Notes; provided, however, the foregoing

provision in (1) above shall be and become null and void if and to the extent that the City shall receive an opinion from nationally recognized bond counsel which concludes that compliance with the foregoing covenant and the provisions of the Code as provided in this section shall not be required to maintain and continue the tax-exempt status of the interest income on the Notes.

Section Eight. Further Authority. The duly elected and appointed officers of the City, including the Mayor, the City Clerk and the Finance Director, are hereby further authorized and directed to execute all documents and take such actions as they may deem necessary or advisable in order to carry out and perform the purposes of this Ordinance and to make ministerial alterations, changes or additions in the foregoing agreements, statements, instruments and other documents herein approved, authorized and confirmed which they may approve, and the execution or taking of such action shall be conclusive evidence of such necessity or advisability.

Section Nine. Effective Date. That this Ordinance shall take effect and be in force after its publication as provided by law.

PASSED by the Council the 20th day of February, 1996.

APPROVED by the Mayor the 20th day of February, 1996.

(S E A L)

Marcia Rinehart

Marcia Rinehart, Mayor

ATTEST:

Martha Heizer

Martha Heizer, City Clerk

APPROVED FOR FORM:

R. S. Wetzler, City Attorney

WII-tnnmr146

AFFIDAVIT OF PUBLICATION

STATE OF KANSAS, JOHNSON COUNTY,ss: Georgiann Thacker being first Duly sworn, Deposes and says: That she is legal publications manager of THE JOHNSON COUNTY SUN, a semi-weekly newspaper printed in the State of Kansas, and published in and of general circulation in JOHNSON COUNTY, Kansas, and that said newspaper is not a trade, religious or fraternal publication.

Said newspaper is a semi-weekly published at least weekly 50 times a year; has been so published continuously and uninterruptedly in said county and state for a period of more than five years prior to the first publication of said notice; and has been admitted at the post office of SHAWNEE MISSION, KANSAS in said County as a second class matter.

That the attached notice is a true copy thereof and was published in the regular and entire issue of said newspaper for One consecutive Day (weeks/days), the first publication thereof being made as aforesaid on the 23rd day of February 19 96, with subsequent publication being made on the following dates:

_____, 19____ _____, 19____

_____, 19____ _____, 19____

Georgiann Thacker

Subscribed and sworn to before me this 23rd day of February 19 96

Deanna J. Martasin
NOTARY PUBLIC

My Commission Expires 1/25/2000

Printer's Fees 89.17

Additional Copies $_____

DEANNA J. MARTASIN
NOTARY PUBLIC
STATE OF KANSAS

First published in The Johnson County Sun, Friday, February 23,1996

ORDINANCE NO. 1566

AN ORDINANCE AUTHORIZING AND PROVIDING FOR THE ISSUANCE AND DELIVERY OF TEMPORARY NOTES, PROJECT 146 (TOWN CENTER PLAZA), OF THE CITY OF LEAWOOD, KANSAS, IN THE PRINCIPAL AMOUNT OF $3,200,000 TO PROVIDE TEMPORARY FINANCING OF THE COST OF CONSTRUCTION OF 117TH STREET FROM ITS INTERSECTION WITH TOWN CENTER DRIVE WEST TO NALL AVENUE, SIGNALIZATION OF THE INTERSECTIONS OF NALL AND 117TH STREET, 119TH STREET AND HAWTHORNE, TOWN CENTER DRIVE AND ROE AVENUE, TOWN CENTER DRIVE AND NALL AVENUE AND 119TH STREET AT ROSEWOOD, CERTAIN UTILITY MAIN IMPROVEMENTS, BURIAL OF OVERHEAD POWER LINES, THE WIDENING AND UTILITY RELOCATIONS OF NALL AVENUE, 119TH STREET, ROE, AND TOWN CENTER DRIVE FROM ROE TO 117TH STREET, THE WIDENING OF TOWN CENTER DRIVE FROM 117TH STREET TO NALL AVENUE, SIGNALIZATION OF THE INTERSECTION OF TOWN CENTER DRIVE AND 117TH STREET OR TOWN CENTER DRIVE AND LEAWOOD CITY HALL/LEAWOOD LIBRARY, AND THE OVERLAY OF 119TH STREET FROM ROE AVENUE TO NALL AVENUE AND ROE AVENUE FROM TOWN CENTER DRIVE TO 119TH STREET IN THE CITY OF LEAWOOD.

WHEREAS, pursuant to K.S.A. 12-6a01, et seq., as amended, and Resolution No. 1238, the Governing Body of the City of Leawood, Kansas (the "City") has heretofore authorized the following described improvement project within the city, to wit: construction of 117th Street from its intersection with Town Center Drive west to Nall Avenue; signalization of various intersections (as hereinbefore outlined); certain utility main improvements, burial of overhead power lines; widening and utility relocations of various streets (as hereinbefore outlined); and the overlay of 119th Street from Roe Avenue to Nall Avenue and Roe Avenue from Town Center Drive to 119th Street (the "Project") at an estimated cost of $4,100,000; and

WHEREAS, the Project has been commenced and the City has heretofore issued its Temporary Notes, Project 146 (Town Center Plaza), dated March 1, 1996, in the principal amount of $900,000 (the "Prior Notes") to provide funds to pay the costs of the Project heretofore incurred by the City, said Prior Notes to become due and payable in the immediate future, and the City has incurred or expects to incur additional costs payable within the next nine months in the amount of $2,300,000; and

WHEREAS, the City is authorized by law and in particular K.S.A. 10-123, as amended, to issue temporary notes of the City to provide funds to redeem and pay the Prior Notes and to pay the costs of the Project as the same become due and payable.

NOW, THEREFORE, BE IT ORDAINED BY THE GOVERNING BODY OF THE CITY OF LEAWOOD, KANSAS, AS FOLLOWS:

Section One. Authorization of Notes. That in order to provide funds to redeem and pay the Prior Notes and to pay costs of the Project now due or to become due in the immediate future, including necessary engineering, legal and incidental costs, there shall be issued and the City is hereby authorized to issue temporary notes of the City, designated City of Leawood, Kansas, Temporary Notes, Project 146 (Town Center Plaza), in the aggregate principal amount of Three Million Two Hundred Thousand Dollars ($3,200,000) (the "Notes"). The amount of the Notes together with other temporary notes heretofore issued to finance the Project which remain outstanding does not exceed the total estimated costs of said Project.

Section Two. Terms of the Notes. Said issue of Notes shall consist of bearer notes numbered 1 through 32 inclusive, each in the denomination of $100,000. Each of said Notes shall be dated March 1, 1996, shall mature by their stated terms and become due and payable on November 21, 1996. The Notes shall bear interest from their dated date, payable at maturity or upon redemption prior thereto as herein provided, at a rate of interest of 3.40% per annum (computed on the basis of actual days elapsed and a 360-day year composed of twelve 30-day months). The Notes shall be subject to redemption at the option of the City upon notice as hereinafter provided and shall be redeemed and cancelled contemporaneously with the issuance of general obligation improvement bonds of the City issued in lieu thereof to provide permanent financing of the Project.

Both principal of and interest on said Notes shall be payable in lawful money of the United States of America by check or draft at the office of the City Treasurer of the City upon presentation and surrender of said Notes.

The City reserves the right to redeem and pay said Notes, in whole or in part (and if in part in denominations of $100,000 selected by the City in its sole discretion), at any date prior to the stated maturity of said Notes by notice thereof given in writing by first class mail to the original purchaser of the Notes and to any known holder of the Notes or by the publication of such notice at least one time in a newspaper published or of general circulation in the metropolitan Kansas City area, and payment of said Notes, such publication of such notice or mailing of written notification of redemption to the original purchaser and the known holder to be at least ten days prior to the redemption date fixed in such notice. Notice of such redemption having been given as aforesaid, interest shall cease to accrue on said Notes from and after the redemption date.

Section Three. Security for the Notes. The full faith, credit and resources of the City of Leawood, Kansas, shall be and the same are hereby irrevocably pledged for the prompt payment of the principal of and interest on the Notes.

The Governing Body of the City shall make provisions for the payment of said Notes by the issuance of renewal notes or general obligation bonds of the City to provide permanent financing of the Project upon the completion thereof. If said Bonds shall not be so issued and the Notes shall not be so paid, the Governing Body shall levy and collect special assessments on property benefitted by the Project, and to the extent said special assessments shall not be so collected, the Governing Body shall levy and collect a tax upon all taxable tangible property within the territorial limits of the City in an amount sufficient to pay the principal of and interest on said Notes as the same become due and payable.

Section Four. Form of Notes. Each of said Notes shall be in customary form as provided by law, shall be signed by the Mayor and attested by the City Clerk of the City and shall have the seal of said City affixed thereto.

Section Five. Execution and Delivery. The Mayor and City Clerk of the City are hereby authorized and directed to prepare and execute the Notes herein authorized in the form and substance hereinbefore described and as provided by law and to procure the proper registration in the office of the City Clerk and in the office of the Treasurer of the State of Kansas, and when so executed and registered, said Notes shall be countersigned by the City Clerk and delivered to United Missouri Bank, the original purchaser thereof, upon payment of the purchase price therefor which shall not be less than 99.625% of the principal amount thereof plus accrued interest to the date of delivery thereof to the original purchaser thereof.

Section Six. Disposition of Proceeds. The proceeds of the sale of the Notes shall be deposited with the City Treasurer. The sum of $900,000 of such proceeds shall be used to redeem and retire the Prior Notes, and the balance of such proceeds shall be deposited in a special fund created for the purpose of paying costs and expenses of the Project.

Section Seven. Tax Covenants. The City covenants and agrees that (1) it will comply with each and every provision of Section 103 and Sections 141 through 150 of the Internal Revenue Code of 1986, as amended (the "Code"), that is or may become applicable to the Notes, necessary to maintain the exclusion from gross income for federal income tax purposes of the interest on the Notes, including but not limited to any provisions requiring the rebate of earnings on amounts held in funds or accounts created with respect to the Notes and (2) it will not use or permit the use of any of the proceeds of the Notes or other funds of the City nor take or permit any other action, or fail to take any action, if any such action or failure to act would adversely affect the exclusion from gross income for federal income tax purposes of the interest on the Notes; provided, however, the foregoing provision in (1) above shall be and become null and void if and to the extent that the City shall receive an opinion from nationally recognized bond counsel which concludes that compliance with the foregoing covenant and the provisions of the Code as provided in this section shall not be required to maintain and continue the tax-exempt status of the interest income on the Notes.

Section Eight. Further Authority. The duly elected and appointed officers of the City, including the Mayor, the City Clerk and the Finance Director, are hereby further authorized and directed to execute all documents and take such actions as they may deem necessary or advisable in order to carry out and perform the purposes of this Ordinance and to make ministerial alterations, changes or additions in the foregoing agreements, statements, instruments and other documents herein approved, authorized and confirmed which they may approve, and the execution or taking of such action shall be conclusive evidence of such necessity or advisability.

Section Nine. Effective Date. That this Ordinance shall take effect and be in force after its publication as provided by law.

PASSED by the Council the 20th day of February, 1996.

APPROVED by the Mayor the 20th day of February, 1996.

(S E A L)

Marcia Rinehart, Mayor

ATTEST:

Martha Meiner, City Clerk

Approved as to form:

R. S. Wetzler, City Attorney

WII-tnhmar146

(15883 - 1F-JC)

ORDINANCE NO. 1565

AN ORDINANCE AUTHORIZING AND PROVIDING FOR THE ISSUANCE AND DELIVERY OF TEMPORARY NOTES, PROJECT 144 (MISSION ROAD, 103RD - I-435), OF THE CITY OF LEAWOOD, KANSAS, IN THE AMOUNT OF $200,000 TO PROVIDE TEMPORARY FINANCING OF THE COST OF IMPROVEMENT OR REIMPROVEMENT OF MISSION ROAD, 103RD - I-435, INCLUDING GRADING, REGRADING, CURBING, RECURBING, GUTTERING, REGUTTERING, PAVING, REPAVING, MACADAMIZING, REMACADAMIZING, CONSTRUCTING, RECONSTRUCTING, OPENING, WIDENING, EXTENDING, ROUNDING CORNERS, STRAIGHTENING, RELOCATING, CONSTRUCTION OR RECONSTRUCTION OF ANY NECESSARY BRIDGES AND APPROACHES THERETO, VIADUCTS, OVERPASSES, UNDERPASSES, CULVERTS, STORM DRAINAGE, TRAFFICWAY ILLUMINATION, TRAFFIC CONTROL DEVICES, PEDESTRIAN WAYS, BICYCLE WAYS OR OTHER IMPROVEMENTS AND OTHER INCIDENTAL CONSTRUCTION COSTS, IN THE CITY OF LEAWOOD.

WHEREAS, pursuant to K.S.A. 12-685, et seq., as amended, and Ordinance No. 1204, the Governing Body of the City of Leawood, Kansas (the "City") has heretofore authorized the following described improvement project within the City, to wit: improvement of certain sections of Mission Road from 103rd Street to I-435 within the City of Leawood (the "Project") at an estimated cost of $2,000,000; and

WHEREAS, the Project has been commenced and the City has heretofore issued its Temporary Notes, Project 144 (Mission Road, 103rd - I-435), dated March 1, 1996, in the principal amount of $200,000 (the "Prior Notes") to provide funds to pay the costs of the Project heretofore incurred by the City and said Prior Notes become due and payable in the immediate future; and

WHEREAS, the City is authorized by law and in particular K.S.A. 10-123, as amended, to issue temporary notes of the City to provide funds to redeem and pay the Prior Notes as the same become due and payable.

NOW, THEREFORE, BE IT ORDAINED BY THE GOVERNING BODY OF THE CITY OF LEAWOOD, KANSAS, AS FOLLOWS:

Section One. Authorization of Notes. That in order to provide funds to redeem and pay the Prior Notes to become due in the immediate future there shall be issued and the City is hereby authorized to issue temporary notes of the City, designated City of Leawood, Kansas, Temporary Notes, Project 144 (Mission Road, 103rd - I-435), in the aggregate principal amount of Two Hundred Thousand Dollars ($200,000) (the "Notes"). The amount of the Notes together with other temporary notes heretofore issued to finance the Project which remain outstanding does not exceed the total estimated costs of said Project.

Section Two. Terms of the Notes. Said issue of Notes shall consist of bearer notes numbered 1 through 2 inclusive, each in the denomination of $100,000. Each of said Notes shall be dated March 1,

1996, shall mature by their stated terms and become due and payable on November 21, 1996. The Notes shall bear interest from their dated date, payable at maturity or upon redemption prior thereto as herein provided, at a rate of interest of 3.35% per annum (computed on the basis of actual days elapsed and a 360-day year composed of twelve 30-day months). The Notes shall be subject to redemption at the option of the City upon notice as hereinafter provided and shall be redeemed and cancelled contemporaneously with the issuance of general obligation improvement bonds of the City issued in lieu thereof to provide permanent financing of the Project.

Both principal of and interest on said Notes shall be payable in lawful money of the United States of America by check or draft at the office of the City Treasurer of the City upon presentation and surrender of said Notes.

The City reserves the right to redeem and pay said Notes, in whole or in part (and if in part in denominations of $100,000 selected by the City in its sole discretion), at any date prior to the stated maturity of said Notes by notice thereof given in writing by first class mail to the original purchaser of the Notes and to any known holder of the Notes or by the publication of such notice at least one time in a newspaper published or of general circulation in the metropolitan Kansas City area, and payment of said Notes, such publication of such notice or mailing of written notification of redemption to the original purchaser and the known holder to be at least ten days prior to the redemption date fixed in such notice. Notice of such redemption having been given as aforesaid, interest shall cease to accrue on said Notes from and after the redemption date.

Section Three. Security for the Notes. The full faith, credit and resources of the City of Leawood, Kansas, shall be and the same are hereby irrevocably pledged for the prompt payment of the principal of and interest on the Notes.

The Governing Body of the City shall make provisions for the payment of said Notes by the issuance of renewal notes or general obligation bonds of the City to provide permanent financing of the Project upon the completion thereof. If said bonds shall not be so issued and the Notes shall not be so paid, the Governing Body shall levy and collect a tax upon all taxable tangible property within the territorial limits of the City in an amount sufficient to pay the principal of and interest on said Notes as the same become due and payable.

Section Four. Form of Notes. Each of said Notes shall be in customary form as provided by law, shall be signed by the Mayor and attested by the City Clerk of the City and shall have the seal of said City affixed thereto.

Section Five. Execution and Delivery. The Mayor and City Clerk of the City are hereby authorized and directed to prepare and execute the Notes herein authorized in the form and substance hereinbefore described and as provided by law and to procure the proper registration in the office of the City Clerk and in the office of the Treasurer of the State of Kansas, and when so executed and registered, said Notes shall be countersigned by the City Clerk and delivered to United Missouri Bank, the original purchaser thereof, upon payment of the purchase price therefor which shall not be less than

99.95% of the principal amount thereof plus accrued interest to the date of delivery thereof to the original purchaser thereof.

Section Six. Disposition of Proceeds. The proceeds of the sale of the Notes shall be deposited with the City Treasurer to be used to redeem and retire the Prior Notes.

Section Seven. Tax Covenants. The City covenants and agrees that (1) it will comply with each and every provision of Section 103 and Sections 141 through 150 of the Internal Revenue Code of 1986, as amended (the "Code"), that is or may become applicable to the Notes, necessary to maintain the exclusion from gross income for federal income tax purposes of the interest on the Notes, including but not limited to any provisions requiring the rebate of earnings on amounts held in funds or accounts created with respect to the Notes and (2) it will not use or permit the use of any of the proceeds of the Notes or other funds of the City nor take or permit any other action, or fail to take any action, if any such action or failure to act would adversely affect the exclusion from gross income for federal income tax purposes of the interest on the Notes; provided, however, the foregoing provision in (1) above shall be and become null and void if and to the extent that the City shall receive an opinion from nationally recognized bond counsel which concludes that compliance with the foregoing covenant and the provisions of the Code as provided in this section shall not be required to maintain and continue the tax-exempt status of the interest income on the Notes.

Section Eight. Further Authority. The duly elected and appointed officers of the City, including the Mayor, the City Clerk and the Finance Director, are hereby further authorized and directed to execute all documents and take such actions as they may deem necessary or advisable in order to carry out and perform the purposes of this Ordinance and to make ministerial alterations, changes or additions in the foregoing agreements, statements, instruments and other documents herein approved, authorized and confirmed which they may approve, and the execution or taking of such action shall be conclusive evidence of such necessity or advisability.

Section Nine. Effective Date. That this Ordinance shall take effect and be in force after its publication as provided by law.

PASSED by the Council the 20th day of February, 1996.

APPROVED by the Mayor the 20th day of February, 1996.

(S E A L)

Marcia Rinehart, Mayor

ATTEST:

Martha Heizer, City Clerk

APPROVED FOR FORM:

R. S. Wetzler, City Attorney

WII:tnr144

AFFIDAVIT OF PUBLICATION

STATE OF KANSAS, JOHNSON COUNTY,ss: Georgiann Thacker being first Duly sworn, Deposes and says: That she is legal publications manager of THE JOHNSON COUNTY SUN, a semi-weekly newspaper printed in the State of Kansas, and published in and of general circulation in JOHNSON COUNTY, Kansas, and that said newspaper is not a trade, religious or fraternal publication.

Said newspaper is a semi-weekly published at least weekly 50 times a year; has been so published continuously and uninterruptedly in said county and state for a period of more than five years prior to the first publication of said notice; and has been admitted at the post office of SHAWNEE MISSION, KANSAS in said County as a second class matter.

That the attached notice is a true copy thereof and was published in the regular and entire issue of said newspaper for one consecutive day (weeks/days), the first publication thereof being made as aforesaid on the 23rd day of January 1996, with subsequent publication being made on the following dates:

_____, 19____ _____, 19____

_____, 19____ _____, 19____

Georgiann Thacker

Subscribed and sworn to before me this 23rd day of January 1996

Deanna J. Martasin
NOTARY PUBLIC

DEANNA J. MARTASIN
NOTARY PUBLIC
STATE OF KANSAS

My Commission Expires 1/25/2000

Printer's Fees 71.17

Additional Copies $_____

First published in The Johnson County Sun, Friday, February 23, 1996

ORDINANCE NO. 1565

AN ORDINANCE AUTHORIZING AND PROVIDING FOR THE ISSUANCE AND DELIVERY OF TEMPORARY NOTES, PROJECT 144 (MISSION ROAD, 103RD - I-435), OF THE CITY OF LEAWOOD, KANSAS, IN THE AMOUNT OF $200,000 TO PROVIDE TEMPORARY FINANCING OF THE COST OF IMPROVEMENT OR REIMPROVEMENT OF MISSION ROAD, 103RD - I-435, INCLUDING GRADING, REGRADING, CURBING, RECURBING, GUTTERING, REGUTTERING, PAVING, REPAVING, MACADAMIZING, REMACADAMIZING, CONSTRUCTING, RECONSTRUCTING, OPENING, WIDENING, EXTENDING, ROUNDING CORNERS, STRAIGHTENING, RELOCATING, CONSTRUCTION OR RECONSTRUCTION OF ANY NECESSARY BRIDGES AND APPROACHES THERETO, VIADUCTS, OVERPASSES, UNDERPASSES, CULVERTS, STORM DRAINAGE, TRAFFICWAY ILLUMINATION, TRAFFIC CONTROL DEVICES, PEDESTRIAN WAYS, BICYCLE WAYS OR OTHER IMPROVEMENTS AND OTHER INCIDENTAL CONSTRUCTION COSTS, IN THE CITY OF LEAWOOD.

WHEREAS, pursuant to K.S.A. 12-685, et seq., as amended, and Ordinance No. 1204, the Governing Body of the City of Leawood, Kansas (the "City") has heretofore authorized the following described improvement project within the City, to wit: improvement of certain sections of Mission Road from 103rd Street to I-435 within the City of Leawood (the "Project") at an estimated cost of $2,000,000; and

WHEREAS, the Project has been commenced and the City has heretofore issued its Temporary Notes, Project 144 (Mission Road, 103rd - I-435), dated March 1, 1996, in the principal amount of $200,000 (the "Prior Notes") to provide funds to pay the costs of the Project heretofore incurred by the City and said Prior Notes become due and payable in the immediate future; and

WHEREAS, the City is authorized by law and in particular K.S.A. 10-123, as amended, to issue temporary notes of the City to provide funds to redeem and pay the Prior Notes as the same become due and payable.

NOW, THEREFORE, BE IT ORDAINED BY THE GOVERNING BODY OF THE CITY OF LEAWOOD, KANSAS, AS FOLLOWS:

Section One. Authorization of Notes. That in order to provide funds to redeem and pay the Prior Notes to become due in the immediate future there shall be issued and the City is hereby authorized to issue temporary notes of the City, designated City of Leawood, Kansas, Temporary Notes, Project 144 (Mission Road, 103rd - I-435), in the aggregate principal amount of Two Hundred Thousand Dollars ($200,000) (the "Notes"). The amount of the Notes together with other temporary notes heretofore issued to finance the Project which remain outstanding does not exceed the total estimated costs of said Project.

Section Two. Terms of the Notes. Said issue of Notes shall consist of bearer notes numbered 1 through 2 inclusive, each in the denomination of $100,000. Each of said Notes shall be dated March 1, 1996, shall mature by their stated terms and become due and payable on November 21, 1996. The Notes shall bear interest from their dated date, payable at maturity or upon redemption prior thereto as herein provided, at a rate of interest of 3.35% per annum (computed on the basis of actual days elapsed and a 360-day year composed of twelve 30-day months). The Notes shall be subject to redemption at the option of the City upon notice as hereinafter provided and shall be redeemed and cancelled contemporaneously with the issuance of general obligation improvement bonds of the City issued in lieu thereof to provide permanent financing of the Project.

Both principal of and interest on said Notes shall be payable in lawful money of the United States of America by check or draft at the office of the City Treasurer of the City upon presentation and surrender of said Notes.

The City reserves the right to redeem and pay said Notes, in whole or in part (and if in part in denominations of $100,000 selected by the City in its sole discretion), at any date prior to the stated maturity of said Notes by notice thereof given in writing by first class mail to the original purchaser of the Notes and to any known holder of the Notes or by the publication of such notice at least one time in a newspaper published or of general circulation in the metropolitan Kansas City area, and payment of said Notes, such publication of such notice or mailing of written notification of redemption to the original purchaser and the known holder to be at least ten days prior to the redemption date fixed in such notice. Notice of such redemption having been given as aforesaid, interest shall cease to accrue on said Notes from and after the redemption date.

Section Three. Security for the Notes. The full faith, credit and resources of the City of Leawood, Kansas, shall be and the same are hereby irrevocably pledged for the prompt payment of the principal of and interest on the Notes.

The Governing Body of the City shall make provisions for the payment of said Notes by the issuance of renewal notes or general obligation bonds of the City to provide permanent financing of the Project upon the completion thereof. If said bonds shall not be so issued and the Notes shall not be so paid, the Governing Body shall levy and collect a tax upon all taxable tangible property within the territorial limits of the City in an amount sufficient to pay the principal of and interest on said Notes as the same become due and payable.

Section Four. Form of Notes. Each of said Notes shall be in customary form as provided by law, shall be signed by the Mayor and attested by the City Clerk of the City and shall have the seal of said City affixed thereto.

Section Five. Execution and Delivery. The Mayor and City Clerk of the City are hereby authorized and directed to prepare and execute the Notes herein authorized in the form and substance hereinbefore described and as provided by law and to procure the proper registration in the office of the City Clerk and in the office of the Treasurer of the State of Kansas, and when so executed and registered, said Notes shall be countersigned by the City Clerk and delivered to United Missouri Bank, the original purchaser thereof, upon payment of the purchase price therefor which shall not be less than 99.95% of the principal amount thereof plus accrued interest to the date of delivery thereof to the original purchaser thereof.

Section Six. Disposition of Proceeds. The proceeds of the sale of the Notes shall be deposited with the City Treasurer to be used to redeem and retire the Prior Notes.

Section Seven. Tax Covenants. The City covenants and agrees that (1) it will comply with each and every provision of Section 103 and Sections 141 through 150 of the Internal Revenue Code of 1986, as amended (the "Code"), that is or may become applicable to the Notes, necessary to maintain the exclusion from gross income for federal income tax purposes of the interest on the Notes, including but not limited to any provisions requiring the rebate of earnings on amounts held in funds or accounts created with respect to the Notes and (2) it will not use or permit the use of any of the proceeds of the Notes or other funds of the City nor take or permit any other action, or fail to take any action, if any such action or failure to act would adversely affect the exclusion from gross income for federal income tax purposes of the interest on the Notes; provided, however, the foregoing provision in (1) above shall be and become null and void if and to the extent that the City shall receive an opinion from nationally recognized bond counsel which concludes that compliance with the foregoing covenant and the provisions of the Code as provided in this section shall not be required to maintain and continue the tax-exempt status of the interest income on the Notes.

Section Eight. Further Authority. The duly elected and appointed officers of the City, including the Mayor, the City Clerk and the Finance Director, are hereby further authorized and directed to execute all documents and take such actions as they may deem necessary or advisable in order to carry out and perform the purposes of this Ordinance and to make ministerial alterations, changes or additions in the foregoing agreements, statements, instruments and other documents herein approved, authorized and confirmed which they may approve, and the execution or taking of such action shall be conclusive evidence of such necessity or advisability.

Section Nine. Effective Date. That this Ordinance shall take effect and be in force after its publication as provided by law.

PASSED by the Council the 20th day of February, 1996.

APPROVED by the Mayor the 20th day of February, 1996.

(SEAL)

ATTEST:

Martha Heizer, City Clerk

Marvin Rimmer, Mayor

APPROVED FOR FORM:

R. S. Wetzler, City Attorney

WH:tsr144

(15882 - 1F-JC)

ORDINANCE NO. 1564

AN ORDINANCE AUTHORIZING AND PROVIDING FOR THE ISSUANCE AND DELIVERY OF TEMPORARY NOTES, PROJECT 140 (83RD STREET), OF THE CITY OF LEAWOOD, KANSAS, IN THE PRINCIPAL AMOUNT OF $1,600,000 TO PROVIDE TEMPORARY FINANCING OF THE COST OF IMPROVEMENT OR REIMPROVEMENT OF 83RD STREET, INCLUDING GRADING, REGRADING, CURBING, RECURBING, GUTTERING, REGUTTERING, PAVING, REPAVING, MACADAMIZING, REMACADAMIZING, CONSTRUCTING, RECONSTRUCTING, OPENING, WIDENING, EXTENDING, ROUNDING CORNERS, STRAIGHTENING, RELOCATING, CONSTRUCTION OR RECONSTRUCTION OF ANY NECESSARY BRIDGES AND APPROACHES THERETO, VIADUCTS, OVERPASSES, UNDERPASSES, CULVERTS, STORM DRAINAGE, TRAFFICWAY ILLUMINATION, TRAFFIC CONTROL DEVICES, PEDESTRIAN WAYS, BICYCLE WAYS OR OTHER IMPROVEMENTS AND OTHER INCIDENTAL CONSTRUCTION COSTS, IN THE CITY OF LEAWOOD.

WHEREAS, pursuant to K.S.A. 12-685, et seq., as amended, and Ordinance No. 1424, the Governing Body of the City of Leawood, Kansas (the "City") has heretofore authorized the following described improvement project within the City, to wit: improvement of 83rd Street beginning at a point on the Kansas/Missouri state line which is the centerline of 83rd Street and 111.18 feet east of the centerline of State Line Road; thence west along the centerline of 83rd Street to a point on the west corporate city limit, said point being approximately 650.10 feet west of the centerline of Wenonga Road (south), within the City of Leawood (the "Project") at an estimated cost of $3,095,816.00; and

WHEREAS, the Project has been commenced and the City has heretofore issued its Temporary Notes, Project 140 (83rd Street), dated March 1, 1996, in the principal amount of $300,000 (the "Prior Notes") to provide funds to pay the costs of the Project heretofore incurred by the City, said Prior Notes to become due and payable in the immediate future, and the City has incurred or expects to incur additional costs payable within the next nine months in the amount of $1,300,000; and

WHEREAS, the City is authorized by law and in particular K.S.A. 10-123, as amended, to issue temporary notes of the City to provide funds to redeem and pay the Prior Notes and to pay the costs of the Project as the same become due and payable.

NOW, THEREFORE, BE IT ORDAINED BY THE GOVERNING BODY OF THE CITY OF LEAWOOD, KANSAS, AS FOLLOWS:

Section One. Authorization of Notes. That in order to provide funds to redeem and pay the Prior Notes and to pay costs of the Project now due or to become due in the immediate future, including necessary engineering, legal and incidental

costs, there shall be issued and the City is hereby authorized to issue temporary notes of the City, designated City of Leawood, Kansas, Temporary Notes, Project 140 (83rd Street), in the aggregate principal amount of One Million Six Hundred Thousand Dollars ($1,600,000) (the "Notes"). The amount of the Notes together with other temporary notes heretofore issued to finance the Project which remain outstanding does not exceed the total estimated costs of said Project.

Section Two. Terms of the Notes. Said issue of Notes shall consist of bearer notes numbered 1 through 16 inclusive, each in the denomination of $100,000. Each of said Notes shall be dated March 1, 1996, shall mature by their stated terms and become due and payable on November 21, 1996. The Notes shall bear interest from their dated date, payable at maturity or upon redemption prior thereto as herein provided, at a rate of interest of 3.40% per annum (computed on the basis of actual days elapsed and a 360-day year composed of twelve 30-day months). The Notes shall be subject to redemption at the option of the City upon notice as hereinafter provided and shall be redeemed and cancelled contemporaneously with the issuance of general obligation improvement bonds of the City issued in lieu thereof to provide permanent financing of the Project.

Both principal of and interest on said Notes shall be payable in lawful money of the United States of America by check or draft at the office of the City Treasurer of the City upon presentation and surrender of said Notes.

The City reserves the right to redeem and pay said Notes, in whole or in part (and if in part in denominations of $100,000 selected by the City in its sole discretion), at any date prior to the stated maturity of said Notes by notice thereof given in writing by first class mail to the original purchaser of the Notes and to any known holder of the Notes or by the publication of such notice at least one time in a newspaper published or of general circulation in the metropolitan Kansas City area, and payment of said Notes, such publication of such notice or mailing of written notification of redemption to the original purchaser and the known holder to be at least ten days prior to the redemption date fixed in such notice. Notice of such redemption having been given as aforesaid, interest shall cease to accrue on said Notes from and after the redemption date.

Section Three. Security for the Notes. The full faith, credit and resources of the City of Leawood, Kansas, shall be and the same are hereby irrevocably pledged for the prompt payment of the principal of and interest on the Notes.

The Governing Body of the City shall make provisions for the payment of said Notes by the issuance of renewal notes or general obligation bonds of the City to provide permanent financing of the Project upon the completion thereof. If said bonds shall not be so issued and the Notes shall not be so paid, the Governing

Body shall levy and collect a tax upon all taxable tangible property within the territorial limits of the City in an amount sufficient to pay the principal of and interest on said Notes as the same become due and payable.

Section Four. Form of Notes. Each of said Notes shall be in customary form as provided by law, shall be signed by the Mayor and attested by the City Clerk of the City and shall have the seal of said City affixed thereto.

Section Five. Execution and Delivery. The Mayor and City Clerk of the City are hereby authorized and directed to prepare and execute the Notes herein authorized in the form and substance hereinbefore described and as provided by law and to procure the proper registration in the office of the City Clerk and in the office of the Treasurer of the State of Kansas, and when so executed and registered, said Notes shall be countersigned by the City Clerk and delivered to United Missouri Bank, the original purchaser thereof, upon payment of the purchase price therefor which shall not be less than 99.625% of the principal amount thereof plus accrued interest to the date of delivery thereof to the original purchaser thereof.

Section Six. Disposition of Proceeds. The proceeds of the sale of the Notes shall be deposited with the City Treasurer. The sum of $300,000 of such proceeds shall be used to redeem and retire the Prior Notes, and the balance of such proceeds shall be deposited in a special fund created for the purpose of paying costs and expenses of the Project.

Section Seven. Tax Covenants. The City covenants and agrees that (1) it will comply with each and every provision of Section 103 and Sections 141 through 150 of the Internal Revenue Code of 1986, as amended (the "Code"), that is or may become applicable to the Notes, necessary to maintain the exclusion from gross income for federal income tax purposes of the interest on the Notes, including but not limited to any provisions requiring the rebate of earnings on amounts held in funds or accounts created with respect to the Notes and (2) it will not use or permit the use of any of the proceeds of the Notes or other funds of the City nor take or permit any other action, or fail to take any action, if any such action or failure to act would adversely affect the exclusion from gross income for federal income tax purposes of the interest on the Notes; provided, however, the foregoing provision in (1) above shall be and become null and void if and to the extent that the City shall receive an opinion from nationally recognized bond counsel which concludes that compliance with the foregoing covenant and the provisions of the Code as provided in this section shall not be required to maintain and continue the tax-exempt status of the interest income on the Notes.

Section Eight. Further Authority. The duly elected and appointed officers

of the City, including the Mayor, the City Clerk and the Finance Director, are hereby further authorized and directed to execute all documents and take such actions as they may deem necessary or advisable in order to carry out and perform the purposes of this Ordinance and to make ministerial alterations, changes or additions in the foregoing agreements, statements, instruments and other documents herein approved, authorized and confirmed which they may approve, and the execution or taking of such action shall be conclusive evidence of such necessity or advisability.

Section Nine. Effective Date. That this Ordinance shall take effect and be in force after its publication as provided by law.

PASSED by the Council the 20th day of February, 1996.

APPROVED by the Mayor the 20th day of February, 1996.

(S E A L)

Marcia Rinehart

Marcia Rinehart, Mayor

ATTEST:

Martha Heizer

Martha Heizer, City Clerk

APPROVED FOR FORM:

R. S. Wetzler, City Attorney

WII-tnnmr140

AFFIDAVIT OF PUBLICATION

STATE OF KANSAS, JOHNSON COUNTY,ss: Georgiann Thacker being first Duly sworn, Deposes and says: That she is legal publications manager of THE JOHNSON COUNTY SUN, a semi-weekly newspaper printed in the State of Kansas, and published in and of general circulation in JOHNSON COUNTY, Kansas, and that said newspaper is not a trade, religious or fraternal publication.

Said newspaper is a semi-weekly published at least weekly 50 times a year; has been so published continuously and uninterruptedly in said county and state for a period of more than five years prior to the first publication of said notice; and has been admitted at the post office of SHAWNEE MISSION, KANSAS in said County as a second class matter.

That the attached notice is a true copy thereof and was published in the regular and entire issue of said newspaper for one consecutive day (weeks/days), the first publication thereof being made as aforesaid on the 23rd day of February 1996, with subsequent publication being made on the following dates:

_____, 19____ _____, 19____

_____, 19____ _____, 19____

Georgiann Thacker

Subscribed and sworn to before me this 23rd day of February 1996

Deanna J. Martasin

NOTARY PUBLIC

DEANNA J. MARTASIN
NOTARY PUBLIC
STATE OF KANSAS

My Commission Expires 1/25/2000

Printer's Fees 86.77

Additional Copies $_____

First published in The Johnson County Sun, Friday, February 23,1996

ORDINANCE NO. 1364

AN ORDINANCE AUTHORIZING AND PROVIDING FOR THE ISSUANCE AND DELIVERY OF TEMPORARY NOTES, PROJECT 140 (83RD STREET), OF THE CITY OF LEAWOOD, KANSAS, IN THE PRINCIPAL AMOUNT OF $1,600,000 TO PROVIDE TEMPORARY FINANCING OF THE COST OF IMPROVEMENT OR REIMPROVEMENT OF 83RD STREET, INCLUDING GRADING, REGRADING, CURBING, RECURBING, GUTTERING, REGUTTERING, PAVING, REPAVING, MACADAMIZING, REMACADAMIZING, CONSTRUCTING, RECONSTRUCTING, OPENING, WIDENING, EXTENDING, ROUNDING CORNERS, STRAIGHTENING, RELOCATING, CONSTRUCTION OR RECONSTRUCTION OF ANY NECESSARY BRIDGES AND APPROACHES THERETO, VIADUCTS, OVERPASSES, UNDERPASSES, CULVERTS, STORM DRAINAGE, TRAFFICWAY ILLUMINATION, TRAFFIC CONTROL DEVICES, PEDESTRIAN WAYS, BICYCLE WAYS OR OTHER IMPROVEMENTS AND OTHER INCIDENTAL CONSTRUCTION COSTS, IN THE CITY OF LEAWOOD.

WHEREAS, pursuant to K.S.A. 12-685, et seq., as amended, and Ordinance No. 1424, the Governing Body of the City of Leawood, Kansas (the "City") has heretofore authorized the following described improvement project within the City, to wit: Improvement of 83rd Street beginning at a point on the Kansas/Missouri state line which is the centerline of 83rd Street and 111.18 feet east of the centerline of State Line Road; thence west along the centerline of 83rd Street to a point on the west corporate city limit, said point being approximately 650.10 feet west of the centerline of Wenonga Road (south), within the City of Leawood (the "Project") at an estimated cost of $3,099,416.00; and

WHEREAS, the Project has been commenced and the City has heretofore issued its Temporary Notes, Project 140 (83rd Street), dated March 1, 1995, in the principal amount of $300,000 (the "Prior Notes") to provide funds to pay the costs of the Project heretofore incurred by the City, said Prior Notes to become due and payable in the immediate future, and the City has incurred or expects to incur additional costs payable within the next nine months in the amount of $1,300,000; and

WHEREAS, the City is authorized by law and in particular K.S.A. 10-123, as amended, to issue temporary notes of the City to provide funds to redeem and pay the Prior Notes and to pay the costs of the Project as the same become due and payable.

NOW, THEREFORE, BE IT ORDAINED BY THE GOVERNING BODY OF THE CITY OF LEAWOOD, KANSAS, AS FOLLOWS:

Section One. Authorization of Notes. That in order to provide funds to redeem and pay the Prior Notes and to pay costs of the Project now due or to become due in the immediate future, including necessary engineering, legal and incidental costs, there shall be issued and the City is hereby authorized to issue temporary notes of the City, designated City of Leawood, Kansas, Temporary Notes, Project 140 (83rd Street), in the aggregate principal amount of One Million Six Hundred Thousand Dollars ($1,600,000) (the "Notes"). The amount of the Notes together with other temporary notes heretofore issued to finance the Project which remain outstanding does not exceed the total estimated costs of said Project.

Section Two. Terms of the Notes. Said issue of Notes shall consist of bearer notes numbered 1 through 16 inclusive, each in the denomination of $100,000. Each of said Notes shall be dated March 1, 1996, shall mature by their stated terms and become due and payable on November 21, 1996. The Notes shall bear interest from their dated date, payable at maturity or upon redemption prior thereto as herein provided, at a rate of interest of 3.40% per annum (computed on the basis of actual days elapsed and a 360-day year composed of twelve 30-day months). The Notes shall be subject to redemption at the option of the City upon notice as hereinafter provided and shall be redeemed and cancelled contemporaneously with the issuance of general obligation improvement bonds of the City issued in lieu thereof to provide permanent financing of the Project.

Both principal of and interest on said Notes shall be payable in lawful money of the United States of America by check or draft at the office of the City Treasurer of the City upon presentation and surrender of said Notes.

The City reserves the right to redeem and pay said Notes, in whole or in part (and if in part in denominations of $100,000 selected by the City in its sole discretion), at any date prior to the stated maturity of said Notes by notice thereof given in writing by first class mail to the original purchaser of the Notes and to any known holder of the Notes or by the publication of such notice at least one time in a newspaper published or of general circulation in the metropolitan Kansas City area, and payment of said Notes, such publication of such notice or mailing of written notification of redemption to the original purchaser and the known holder to be at least ten days prior to the redemption date fixed in such notice. Notice of such redemption having been given as aforesaid, interest shall cease to accrue on said Notes from and after the redemption date.

Section Three. Security for the Notes. The full faith, credit and resources of the City of Leawood, Kansas, shall be and the same are hereby irrevocably pledged for the prompt payment of the principal of and interest on the Notes.

The Governing Body of the City shall make provisions for the payment of said Notes by the issuance of renewal notes or general obligation bonds of the City to provide permanent financing of the Project upon the completion thereof. If said bonds shall not be so issued and the Notes shall not be so paid, the Governing Body shall levy and collect a tax upon all taxable tangible property within the territorial limits of the City in an amount sufficient to pay the principal of and interest on said Notes as the same become due and payable.

Section Four. Form of Notes. Each of said Notes shall be in customary form as provided by law, shall be signed by the Mayor and attested by the City Clerk of the City and shall have the seal of said City affixed thereto.

Section Five. Execution and Delivery. The Mayor and City Clerk of the City are hereby authorized and directed to prepare and execute the Notes herein authorized in the form and substance hereinbefore described and as provided by law and to procure the proper registration in the office of the City Clerk and in the office of the Treasurer of the State of Kansas, and when so executed and registered, said Notes shall be countersigned by the City Clerk and delivered to United Missouri Bank, the original purchaser thereof, upon payment of the purchase price therefor which shall not be less than 99.625% of the principal amount thereof plus accrued interest to the date of delivery thereof to the original purchaser thereof.

Section Six. Disposition of Proceeds. The proceeds of the sale of the Notes shall be deposited with the City Treasurer. The sum of $300,000 of such proceeds shall be used to redeem and retire the Prior Notes, and the balance of such proceeds shall be deposited in a special fund created for the purpose of paying costs and expenses of the Project.

Section Seven. Tax Covenants. The City covenants and agrees that (1) it will comply with each and every provision of Section 103 and Sections 141 through 150 of the Internal Revenue Code of 1986, as amended (the "Code"), that is or may become applicable to the Notes, necessary to maintain the exclusion from gross income for federal income tax purposes of the interest on the Notes, including but not limited to any provisions requiring the rebate of earnings on amounts held in funds or accounts created with respect to the Notes and (2) it will not use or permit the use of any of the proceeds of the Notes or other funds of the City nor take or permit any other action, or fail to take any action, if any such action or failure to act would adversely affect the exclusion from gross income for federal income tax purposes of the interest on the Notes; provided, however, the foregoing provision in (1) above shall be and become null and void if and to the extent that the City shall receive an opinion from nationally recognized bond counsel which concludes that compliance with the foregoing covenant and the provisions of the Code as provided in this section shall not be required to maintain and continue the tax-exempt status of the interest income on the Notes.

Section Eight. Further Authority. The duly elected and appointed officers of the City, including the Mayor, the City Clerk and the Finance Director, are hereby further authorized and directed to execute all documents and take such actions as they may deem necessary or advisable in order to carry out and perform the purposes of this Ordinance and to make ministerial alterations, changes or additions in the foregoing agreements, statements, instruments and other documents herein approved, authorized and confirmed which they may approve, and the execution or taking of such action shall be conclusive evidence of such necessity or advisability.

Section Nine. Effective Date. That this Ordinance shall take effect and be in force after its publication as provided by law.

PASSED by the Council the 20th day of February, 1996.

APPROVED by the Mayor the 20th day of February, 1996.

(S E A L)

Marcia Rinehart, Mayor

ATTEST:

Martha Meiser, City Clerk

APPROVED FOR FORM

K. S. Metzler, City Attorney

(15881 - 1F-JC)

WII-tnmr140

ORDINANCE NO. 1563

AN ORDINANCE AUTHORIZING AND PROVIDING FOR THE ISSUANCE AND DELIVERY OF TEMPORARY NOTES, PROJECT 131 (NALL AVENUE, 119TH-135TH STREET), OF THE CITY OF LEAWOOD, KANSAS, IN THE PRINCIPAL AMOUNT OF $300,000 TO PROVIDE TEMPORARY FINANCING OF THE COST OF IMPROVEMENT OR REIMPROVEMENT OF NALL AVENUE, 119TH-135TH STREET, INCLUDING GRADING, REGRADING, CURBING, RECURBING, GUTTERING, REGUTTERING, PAVING, REPAVING, MACADAMIZING, REMACADAMIZING, CONSTRUCTING, RECONSTRUCTING, OPENING, WIDENING, EXTENDING, ROUNDING CORNERS, STRAIGHTENING, RELOCATING, CONSTRUCTION OR RECONSTRUCTION OF ANY NECESSARY BRIDGES AND APPROACHES THERETO, VIADUCTS, OVERPASSES, UNDERPASSES, CULVERTS, STORM DRAINAGE, TRAFFICWAY ILLUMINATION, TRAFFIC CONTROL DEVICES, PEDESTRIAN WAYS, BICYCLE WAYS OR OTHER IMPROVEMENTS AND OTHER INCIDENTAL CONSTRUCTION COSTS, IN THE CITY OF LEAWOOD.

WHEREAS, pursuant to K.S.A. 12-685, et seq., as amended, and Ordinance No. 1433, the Governing Body of the City of Leawood, Kansas (the "City") has heretofore authorized the following described improvement project within the City, to wit: improvement of Nall Avenue beginning at a point on the west line of Section 28-13-25, 2651 feet north of the centerline of 135th Street said point being the common city limit lines of Leawood, Kansas, and Overland Park, Kansas; thence north 3985 feet along the west line of Section 28-13-25 and Section 21-13-25 to a point on the common city limit lines of Leawood, Kansas, and Overland Park, Kansas, said point being 3997 feet south of the centerline of 119th Street, within the City of Leawood (the "Project") at an estimated cost of $7,604,683; and

WHEREAS, the Project has been commenced and the City has heretofore issued its Temporary Notes, Project 131 (Nall Avenue, 119th-135th Street), dated March 1, 1996, in the principal amount of $200,000 (the "Prior Notes") to provide funds to pay the costs of the Project heretofore incurred by the City, said Prior Notes to become due and payable in the immediate future, and the City has incurred or expects to incur additional costs payable within the next nine months in the amount of $100,000; and

WHEREAS, the City is authorized by law and in particular K.S.A. 10-123, as amended, to issue temporary notes of the City to provide funds to redeem and pay the Prior Notes and to pay the costs of the Project as the same become due and payable.

NOW, THEREFORE, BE IT ORDAINED BY THE GOVERNING BODY OF THE CITY OF LEAWOOD, KANSAS, AS FOLLOWS:

Section One. Authorization of Notes. That in order to provide funds to

redeem and pay the Prior Notes and to pay costs of the Project now due or to become due in the immediate future, including necessary engineering, legal and incidental costs, there shall be issued and the City is hereby authorized to issue temporary notes of the City, designated City of Leawood, Kansas, Temporary Notes, Project 131 (Nall Avenue, 119th-135th Street), in the aggregate principal amount of Three Hundred Thousand Dollars ($300,000) (the "Notes"). The amount of the Notes together with other temporary notes heretofore issued to finance the Project which remain outstanding does not exceed the total estimated costs of said Project.

Section Two. Terms of the Notes. Said issue of Notes shall consist of bearer notes numbered 1 through 3 inclusive, each in the denomination of $100,000. Each of said Notes shall be dated March 1, 1996, shall mature by their stated terms and become due and payable on November 21, 1996. The Notes shall bear interest from their dated date, payable at maturity or upon redemption prior thereto as herein provided, at a rate of interest of 3.35% per annum (computed on the basis of actual days elapsed and a 360-day year composed of twelve 30-day months). The Notes shall be subject to redemption at the option of the City upon notice as hereinafter provided and shall be redeemed and cancelled contemporaneously with the issuance of general obligation improvement bonds of the City issued in lieu thereof to provide permanent financing of the Project.

Both principal of and interest on said Notes shall be payable in lawful money of the United States of America by check or draft at the office of the City Treasurer of the City upon presentation and surrender of said Notes.

The City reserves the right to redeem and pay said Notes, in whole or in part (and if in part in denominations of $100,000 selected by the City in its sole discretion), at any date prior to the stated maturity of said Notes by notice thereof given in writing by first class mail to the original purchaser of the Notes and to any known holder of the Notes or by the publication of such notice at least one time in a newspaper published or of general circulation in the metropolitan Kansas City area, and payment of said Notes, such publication of such notice or mailing of written notification of redemption to the original purchaser and the known holder to be at least ten days prior to the redemption date fixed in such notice. Notice of such redemption having been given as aforesaid, interest shall cease to accrue on said Notes from and after the redemption date.

Section Three. Security for the Notes. The full faith, credit and resources of the City of Leawood, Kansas, shall be and the same are hereby irrevocably pledged for the prompt payment of the principal of and interest on the Notes.

The Governing Body of the City shall make provisions for the payment of said

Notes by the issuance of renewal notes or general obligation bonds of the City to provide permanent financing of the Project upon the completion thereof. If said bonds shall not be so issued and the Notes shall not be so paid, the Governing Body shall levy and collect a tax upon all taxable tangible property within the territorial limits of the City in an amount sufficient to pay the principal of and interest on said Notes as the same become due and payable.

Section Four. Form of Notes. Each of said Notes shall be in customary form as provided by law, shall be signed by the Mayor and attested by the City Clerk of the City and shall have the seal of said City affixed thereto.

Section Five. Execution and Delivery. The Mayor and City Clerk of the City are hereby authorized and directed to prepare and execute the Notes herein authorized in the form and substance hereinbefore described and as provided by law and to procure the proper registration in the office of the City Clerk and in the office of the Treasurer of the State of Kansas, and when so executed and registered, said Notes shall be countersigned by the City Clerk and delivered to United Missouri Bank, the original purchaser thereof, upon payment of the purchase price therefor which shall not be less than 99.80% of the principal amount thereof plus accrued interest to the date of delivery thereof to the original purchaser thereof.

Section Six. Disposition of Proceeds. The proceeds of the sale of the Notes shall be deposited with the City Treasurer. The sum of $200,000 of such proceeds shall be used to redeem and retire the Prior Notes, and the balance of such proceeds shall be deposited in a special fund created for the purpose of paying costs and expenses of the Project.

Section Seven. Tax Covenants. The City covenants and agrees that (1) it will comply with each and every provision of Section 103 and Sections 141 through 150 of the Internal Revenue Code of 1986, as amended (the "Code"), that is or may become applicable to the Notes, necessary to maintain the exclusion from gross income for federal income tax purposes of the interest on the Notes, including but not limited to any provisions requiring the rebate of earnings on amounts held in funds or accounts created with respect to the Notes and (2) it will not use or permit the use of any of the proceeds of the Notes or other funds of the City nor take or permit any other action, or fail to take any action, if any such action or failure to act would adversely affect the exclusion from gross income for federal income tax purposes of the interest on the Notes; provided, however, the foregoing provision in (1) above shall be and become null and void if and to the extent that the City shall receive an opinion from nationally recognized bond counsel which concludes that compliance with the foregoing covenant and the provisions of

the Code as provided in this section shall not be required to maintain and continue the tax-exempt status of the interest income on the Notes.

Section Eight. Further Authority. The duly elected and appointed officers of the City, including the Mayor, the City Clerk and the Finance Director, are hereby further authorized and directed to execute all documents and take such actions as they may deem necessary or advisable in order to carry out and perform the purposes of this Ordinance and to make ministerial alterations, changes or additions in the foregoing agreements, statements, instruments and other documents herein approved, authorized and confirmed which they may approve, and the execution or taking of such action shall be conclusive evidence of such necessity or advisability.

Section Nine. Effective Date. That this Ordinance shall take effect and be in force after its publication as provided by law.

PASSED by the Council the 20th day of February, 1996.

APPROVED by the Mayor the 20th day of February, 1996.

(S E A L)

Marcia Rinehart

Marcia Rinehart, Mayor

ATTEST:

Martha Heizer

Martha Heizer, City Clerk

APPROVED FOR FORM:

R. S. Wetzler, City Attorney

WII-tnnmr131

AFFIDAVIT OF PUBLICATION

STATE OF KANSAS, JOHNSON COUNTY,ss: Georgiann Thacker being first Duly sworn, Deposes and says: That she is legal publications manager of THE JOHNSON COUNTY SUN, a semi-weekly newspaper printed in the State of Kansas, and published in and of general circulation in JOHNSON COUNTY, Kansas, and that said newspaper is not a trade, religious or fraternal publication.

Said newspaper is a semi-weekly published at least weekly 50 times a year; has been so published continuously and uninterruptedly in said county and state for a period of more than five years prior to the first publication of said notice; and has been admitted at the post office of SHAWNEE MISSION, KANSAS in said County as a second class matter.

That the attached notice is a true copy thereof and was published in the regular and entire issue of said newspaper for one consecutive day (weeks/days), the first publication thereof being made as aforesaid on the 23rd day of February 19 96, with subsequent publication being made on the following dates:

_____, 19____ _____, 19____

_____, 19____ _____, 19____

Georgiann Thacker

Subscribed and sworn to before me this 23rd day of February 19 96

Deanna J. Martasin
NOTARY PUBLIC

DEANNA J. MARTASIN
NOTARY PUBLIC
STATE OF KANSAS

My Commission Expires 1/25/2000

Printer's Fees 87.91

Additional Copies $_____

First published in The Johnson County Sun, Friday, February 23,1996

ORDINANCE NO. 1563

AN ORDINANCE AUTHORIZING AND PROVIDING FOR THE ISSUANCE AND DELIVERY OF TEMPORARY NOTES, PROJECT 131 (WALL AVENUE, 119TH-135TH STREET), OF THE CITY OF LEAWOOD, KANSAS, IN THE PRINCIPAL AMOUNT OF $300,000 TO PROVIDE TEMPORARY FINANCING OF THE COST OF IMPROVEMENT OR REIMPROVEMENT OF WALL AVENUE, 119TH-135TH STREET, INCLUDING GRADING, REGRADING, CURBING, RECURBING, GUTTERING, REGUTTERING, PAVING, REPAVING, MACADAMIZING, REMACADAMIZING, CONSTRUCTING, RECONSTRUCTING, OPENING, WIDENING, EXTENDING, ROUNDING CORNERS, STRAIGHTENING, RELOCATING, CONSTRUCTION OR RECONSTRUCTION OF ANY NECESSARY BRIDGES AND APPROACHES THERETO, VIADUCTS, OVERPASSES, UNDERPASSES, CULVERTS, STORM DRAINAGE, TRAFFICWAY ILLUMINATION, TRAFFIC CONTROL DEVICES, PEDESTRIAN WAYS, BICYCLE WAYS OR OTHER IMPROVEMENTS AND OTHER INCIDENTAL CONSTRUCTION COSTS, IN THE CITY OF LEAWOOD.

WHEREAS, pursuant to K.S.A. 12-685, et seq., as amended, and Ordinance No. 1433, the Governing Body of the City of Leawood, Kansas (the "City") has heretofore authorized the following described improvement project within the City, to wit: improvement of Wall Avenue beginning at a point on the west line of Section 28-13-25, 2631 feet north of the centerline of 135th Street said point being the common city limit lines of Leawood, Kansas, and Overland Park, Kansas; thence north 3985 feet along the west line of Section 28-13-25 and Section 21-13-25 to a point on the common city limit lines of Leawood, Kansas, and Overland Park, Kansas, said point being 3997 feet south of the centerline of 119th Street, within the City of Leawood (the "Project") at an estimated cost of $7,604,683; and

WHEREAS, the Project has been commenced and the City has heretofore issued its Temporary Notes, Project 131 (Wall Avenue, 119th-135th Street), dated March 1, 1996, in the principal amount of $200,000 (the "Prior Notes") to provide funds to pay the costs of the Project heretofore incurred by the City, said Prior Notes to become due and payable in the immediate future, and the City has incurred or expects to incur additional costs payable within the next nine months in the amount of $100,000; and

WHEREAS, the City is authorized by law and in particular K.S.A. 10-123, as amended, to issue temporary notes of the City to provide funds to redeem and pay the Prior Notes and to pay the costs of the Project as the same become due and payable.

NOW, THEREFORE, BE IT ORDAINED BY THE GOVERNING BODY OF THE CITY OF LEAWOOD, KANSAS, AS FOLLOWS:

Section One. Authorization of Notes. That in order to provide funds to redeem and pay the Prior Notes and to pay costs of the Project now due or to become due in the immediate future, including necessary engineering, legal and incidental costs, there shall be issued and the City is hereby authorized to issue temporary notes of the City, designated City of Leawood, Kansas, Temporary Notes, Project 131 (Wall Avenue, 119th-135th Street), in the aggregate principal amount of Three Hundred Thousand Dollars ($300,000) (the "Notes"). The amount of the Notes together with other temporary notes heretofore issued to finance the Project which remain outstanding does not exceed the total estimated costs of said Project.

Section Two. Terms of the Notes. Said issue of Notes shall consist of bearer notes numbered 1 through 3 inclusive, each in the denomination of $100,000. Each of said Notes shall be dated March 1, 1996, shall mature by their stated terms and become due and payable on November 21, 1996. The Notes shall bear interest from their dated date, payable at maturity or upon redemption prior thereto as herein provided, at a rate of interest of 3.25% per annum (computed on the basis of actual days elapsed and a 360-day year composed of twelve 30-day months). The Notes shall be subject to redemption at the option of the City upon notice as hereinafter provided and shall be redeemed and cancelled contemporaneously with the issuance of general obligation improvement bonds of the City issued in lieu thereof to provide permanent financing of the Project.

Both principal of and interest on said Notes shall be payable in lawful money of the United States of America by check or draft at the office of the City Treasurer of the City upon presentation and surrender of said Notes.

The City reserves the right to redeem and pay said Notes, in whole or in part (and if in part in denominations of $100,000 selected by the City in its sole discretion), at any date prior to the stated maturity of said Notes by notice thereof given in writing by first class mail to the original purchaser of the Notes and to any known holder of the Notes or by the publication of such notice at least one time in a newspaper published or of general circulation in the metropolitan Kansas City area, and payment of said Notes, such publication of such notice or mailing of written notification of redemption to the original purchaser and the known holder to be at least ten days prior to the redemption date fixed in such notice. Notice of such redemption having been given as aforesaid, interest shall cease to accrue on said Notes from and after the redemption date.

Section Three. Security for the Notes. The full faith, credit and resources of the City of Leawood, Kansas, shall be and the same are hereby irrevocably pledged for the prompt payment of the principal of and interest on the Notes.

The Governing Body of the City shall make provisions for the payment of said Notes by the issuance of renewal notes or general obligation bonds of the City to provide permanent financing of the Project upon the completion thereof. If said bonds shall not be so issued and the Notes shall not be so paid, the Governing Body shall levy and collect a tax upon all taxable tangible property within the territorial limits of the City in an amount sufficient to pay the principal of and interest on said Notes as the same become due and payable.

Section Four. Form of Notes. Each of said Notes shall be in customary form as provided by law, shall be signed by the Mayor and attested by the City Clerk of the City and shall have the seal of said City affixed thereto.

Section Five. Execution and Delivery. The Mayor and City Clerk of the City are hereby authorized and directed to prepare and execute the Notes herein authorized in the form and substance hereinbefore described and as provided by law and to procure the proper registration in the office of the City Clerk and in the office of the Treasurer of the State of Kansas, and when so executed and registered, said Notes shall be countersigned by the City Clerk and delivered to United Missouri Bank, the original purchaser thereof, upon payment of the purchase price therefor which shall not be less than 99.80% of the principal amount thereof plus accrued interest to the date of delivery thereof to the original purchaser thereof.

Section Six. Disposition of Proceeds. The proceeds of the sale of the Notes shall be deposited with the City Treasurer. The sum of $200,000 of such proceeds shall be used to redeem and retire the Prior Notes, and the balance of such proceeds shall be deposited in a special fund created for the purpose of paying costs and expenses of the Project.

Section Seven. Tax Covenants. The City covenants and agrees that (1) it will comply with each and every provision of Section 103 and Sections 141 through 150 of the Internal Revenue Code of 1986, as amended (the "Code"), that is or may become applicable to the Notes, necessary to maintain the exclusion from gross income for federal income tax purposes of the interest on the Notes, including but not limited to any provisions requiring the rebate of earnings on amounts held in funds or accounts created with respect to the Notes and (2) it will not use or permit the use of any of the proceeds of the Notes or other funds of the City nor take or permit any other action, or fail to take any action, if any such action or failure to act would adversely affect the exclusion from gross income for federal income tax purposes of the interest on the Notes; provided, however, the foregoing provision in (1) above shall be and become null and void if and to the extent that the City shall receive an opinion from nationally recognized bond counsel which concludes that compliance with the foregoing covenant and the provisions of the Code as provided in this section shall not be required to maintain and continue the tax-exempt status of the interest income on the Notes.

Section Eight. Further Authority. The duly elected and appointed officers of the City, including the Mayor, the City Clerk and the Finance Director, are hereby further authorized and directed to execute all documents and take such actions as they may deem necessary or advisable in order to carry out and perform the purposes of this Ordinance and to make ministerial alterations, changes or additions in the foregoing agreements, statements, instruments and other documents herein approved, authorized and confirmed which they may approve, and the execution or taking of such action shall be conclusive evidence of such necessity or advisability.

Section Nine. Effective Date. That this Ordinance shall take effect and be in force after its publication as provided by law.

PASSED by the Council the 20th day of February, 1996.

APPROVED by the Mayor the 20th day of February, 1996.

(S E A L)

Marcia Rinehart, Mayor

ATTEST:

Martha Heizer, City Clerk

APPROVED FOR FORM:

R. S. Wetzler, City Attorney

WIX-tnmarIII

(15880 - 1F-JC)

ORDINANCE NO. 1562

AN ORDINANCE AUTHORIZING AND PROVIDING FOR THE ISSUANCE AND DELIVERY OF TEMPORARY NOTES, PROJECT 128 (OLD KENNETH ROAD), OF THE CITY OF LEAWOOD, KANSAS, IN THE PRINCIPAL AMOUNT OF $600,000 TO PROVIDE TEMPORARY FINANCING OF THE CITY'S SHARE OF THE COST OF CONSTRUCTION OF OLD KENNETH ROAD BETWEEN K-150 AND KENNETH PARKWAY, SAID IMPROVEMENTS TO CONSIST OF A 2-LANE UNDIVIDED ROADWAY WITH CONCRETE CURB AND GUTTER, AND ALSO INCLUDING ALL NECESSARY STORM DRAINAGE FACILITIES, SIDEWALKS, STREET LIGHTING AND OTHER APPURTENANCES, IN THE CITY OF LEAWOOD.

WHEREAS, pursuant to K.S.A. 12-6a01, et seq., as amended, and Resolution No. 1101, the Governing Body of the City of Leawood, Kansas (the "City") has heretofore authorized the following described improvement project within the City, to wit: construction of Old Kenneth Road between K-150 and Kenneth Parkway, improvements to consist of a 2-lane undivided roadway with concrete curb and gutter, and also including all necessary storm drainage facilities, sidewalks, street lighting and other appurtenances (the "Project") at an estimated cost of $635,834.00; and

WHEREAS, the Project has been commenced and the City has heretofore issued its Temporary Notes, Project 128 (Old Kenneth Road), dated March 1, 1996, in the principal amount of $300,000 (the "Prior Notes") to provide funds to pay the costs of the Project heretofore incurred by the City, said Prior Notes to become due and payable in the immediate future, and the City has incurred or expects to incur additional costs payable within the next nine months in the amount of $300,000; and

WHEREAS, the City is authorized by law and in particular K.S.A. 10-123, as amended, to issue temporary notes of the City to provide funds to redeem and pay the Prior Notes and to pay the costs of the Project as the same become due and payable.

NOW, THEREFORE, BE IT ORDAINED BY THE GOVERNING BODY OF THE CITY OF LEAWOOD, KANSAS, AS FOLLOWS:

Section One. Authorization of Notes. That in order to provide funds to redeem and pay the Prior Notes and to pay costs of the Project now due or to become due in the immediate future, including necessary engineering, legal and incidental costs, there shall be issued and the City is hereby authorized to issue temporary notes of the City, designated City of Leawood, Kansas, Temporary Notes, Project 128 (Old Kenneth Road), in the aggregate principal amount of Six Hundred Thousand Dollars ($600,000) (the "Notes"). The amount of the Notes together with other temporary notes heretofore issued to finance the Project which remain outstanding does not exceed the total estimated costs of said Project.

Section Two. Terms of the Notes. Said issue of Notes shall consist of bear-

er notes numbered 1 through 6 inclusive, each in the denomination of $100,000. Each of said Notes shall be dated March 1, 1996, shall mature by their stated terms and become due and payable on November 21, 1996. The Notes shall bear interest from their dated date, payable at maturity or upon redemption prior thereto as herein provided, at a rate of interest of 3.35% per annum (computed on the basis of actual days elapsed and a 360-day year composed of twelve 30-day months). The Notes shall be subject to redemption at the option of the City upon notice as hereinafter provided and shall be redeemed and cancelled contemporaneously with the issuance of general obligation improvement bonds of the City issued in lieu thereof to provide permanent financing of the Project.

Both principal of and interest on said Notes shall be payable in lawful money of the United States of America by check or draft at the office of the City Treasurer of the City upon presentation and surrender of said Notes.

The City reserves the right to redeem and pay said Notes, in whole or in part (and if in part in denominations of $100,000 selected by the City in its sole discretion), at any date prior to the stated maturity of said Notes by notice thereof given in writing by first class mail to the original purchaser of the Notes and to any known holder of the Notes or by the publication of such notice at least one time in a newspaper published or of general circulation in the metropolitan Kansas City area, and payment of said Notes, such publication of such notice or mailing of written notification of redemption to the original purchaser and the known holder to be at least ten days prior to the redemption date fixed in such notice. Notice of such redemption having been given as aforesaid, interest shall cease to accrue on said Notes from and after the redemption date.

Section Three. Security for the Notes. The full faith, credit and resources of the City of Leawood, Kansas, shall be and the same are hereby irrevocably pledged for the prompt payment of the principal of and interest on the Notes.

The Governing Body of the City shall make provisions for the payment of said Notes by the issuance of renewal notes or general obligation bonds of the City to provide permanent financing of the Project upon the completion thereof. If said bonds shall not be so issued and the Notes shall not be so paid, the Governing Body shall levy and collect special assessments on property benefitted by the Project, and to the extent said special assessments shall not be so collected, the Governing Body shall levy and collect a tax upon all taxable tangible property within the territorial limits of the City in an amount sufficient to pay the principal of and interest on said Notes as the same become due and payable.

Section Four. Form of Notes. Each of said Notes shall be in customary form as provided by law, shall be signed by the Mayor and attested by the City Clerk of

the City and shall have the seal of said City affixed thereto.

Section Five. Execution and Delivery. The Mayor and City Clerk of the City are hereby authorized and directed to prepare and execute the Notes herein authorized in the form and substance hereinbefore described and as provided by law and to procure the proper registration in the office of the City Clerk and in the office of the Treasurer of the State of Kansas, and when so executed and registered, said Notes shall be countersigned by the City Clerk and delivered to United Missouri Bank, the original purchaser thereof, upon payment of the purchase price therefor which shall not be less than 99.95% of the principal amount thereof plus accrued interest to the date of delivery thereof to the original purchaser thereof.

Section Six. Disposition of Proceeds. The proceeds of the sale of the Notes shall be deposited with the City Treasurer. The sum of $300,000 of such proceeds shall be used to redeem and retire the Prior Notes, and the balance of such proceeds shall be deposited in a special fund created for the purpose of paying costs and expenses of the Project.

Section Seven. Tax Covenants. The City covenants and agrees that (1) it will comply with each and every provision of Section 103 and Sections 141 through 150 of the Internal Revenue Code of 1986, as amended (the "Code"), that is or may become applicable to the Notes, necessary to maintain the exclusion from gross income for federal income tax purposes of the interest on the Notes, including but not limited to any provisions requiring the rebate of earnings on amounts held in funds or accounts created with respect to the Notes and (2) it will not use or permit the use of any of the proceeds of the Notes or other funds of the City nor take or permit any other action, or fail to take any action, if any such action or failure to act would adversely affect the exclusion from gross income for federal income tax purposes of the interest on the Notes; provided, however, the foregoing provision in (1) above shall be and become null and void if and to the extent that the City shall receive an opinion from nationally recognized bond counsel which concludes that compliance with the foregoing covenant and the provisions of the Code as provided in this section shall not be required to maintain and continue the tax-exempt status of the interest income on the Notes.

Section Eight. Further Authority. The duly elected and appointed officers of the City, including the Mayor, the City Clerk and the Finance Director, are hereby further authorized and directed to execute all documents and take such actions as they may deem necessary or advisable in order to carry out and perform the purposes of this Ordinance and to make ministerial alterations, changes or additions in the foregoing agreements, statements, instruments and other documents

herein approved, authorized and confirmed which they may approve, and the execution or taking of such action shall be conclusive evidence of such necessity or advisability.

Section Nine. Effective Date. That this Ordinance shall take effect and be in force after its publication as provided by law.

PASSED by the Council the 20th day of February, 1996.

APPROVED by the Mayor the 20th day of February, 1996.

(S E A L)

Marcia Rinehart, Mayor

ATTEST:

Martha Heizer, City Clerk

APPROVED FOR FORM:

R. S. Wetzler, City Attorney

WII-tnnmr128

AFFIDAVIT OF PUBLICATION

STATE OF KANSAS, JOHNSON COUNTY,ss: Georgiann Thacker being first Duly sworn, Deposes and says: That she is legal publications manager of THE JOHNSON COUNTY SUN, a semi-weekly newspaper printed in the State of Kansas, and published in and of general circulation in JOHNSON COUNTY, Kansas, and that said newspaper is not a trade, religious or fraternal publication.

Said newspaper is a semi-weekly published at least weekly 50 times a year; has been so published continuously and uninterruptedly in said county and state for a period of more than five years prior to the first publication of said notice; and has been admitted at the post office of SHAWNEE MISSION, KANSAS in said County as a second class matter.

That the attached notice is a true copy thereof and was published in the regular and entire issue of said newspaper for One consecutive day (weeks/days), the first publication thereof being made as aforesaid on the 23rd day of February 19 96, with subsequent publication being made on the following dates:

_____, 19____ _____, 19____

_____, 19____ _____, 19____

Georgiann Thacker

Subscribed and sworn to before me this 23rd day of February 19 96

Deanna J. Martasin
NOTARY PUBLIC

My Commission Expires 1/25/2000

Printer's Fees 83.17

Additional Copies $_____

DEANNA J. MARTASIN
NOTARY PUBLIC
STATE OF KANSAS

First published in The Johnson County Sun, Friday, February 23,1996

ORDINANCE NO. 1562

AN ORDINANCE AUTHORIZING AND PROVIDING FOR THE ISSUANCE AND DELIVERY OF TEMPORARY NOTES, PROJECT 128 (OLD KENNETH ROAD), OF THE CITY OF LENEXA, KANSAS, IN THE PRINCIPAL AMOUNT OF $600,000 TO PROVIDE TEMPORARY FINANCING OF THE CITY'S SHARE OF THE COST OF CONSTRUCTION OF OLD KENNETH ROAD BETWEEN K-150 AND KENNETH PARKWAY, SAID IMPROVEMENTS TO CONSIST OF A 2-LANE UNDIVIDED ROADWAY WITH CONCRETE CURB AND GUTTER, AND ALSO INCLUDING ALL NECESSARY STORM DRAINAGE FACILITIES, SIDEWALKS, STREET LIGHTING AND OTHER APPURTENANCES, IN THE CITY OF LENEXA.

WHEREAS, pursuant to K.S.A. 12-6a01, et seq., as amended, and Resolution No. 1101, the Governing Body of the City of Lenexa, Kansas (the "City") has heretofore authorized the following described improvement project within the City, to wit: construction of Old Kenneth Road between K-150 and Kenneth Parkway, improvements to consist of a 2-lane undivided roadway with concrete curb and gutter, and also including all necessary storm drainage facilities, sidewalks, street lighting and other appurtenances (the "Project") at an estimated cost of $635,634.00; and

WHEREAS, the Project has been commenced and the City has heretofore issued its Temporary Notes, Project 128 (Old Kenneth Road), dated March 1, 1996, in the principal amount of $300,000 (the "Prior Notes") to provide funds to pay the costs of the Project heretofore incurred by the City, said Prior Notes to become due and payable in the immediate future, and the City has incurred or expects to incur additional costs payable within the next nine months in the amount of $300,000; and

WHEREAS, the City is authorized by law and in particular K.S.A. 10-123, as amended, to issue temporary notes of the City to provide funds to redeem and pay the Prior Notes and to pay the costs of the Project as the same become due and payable.

NOW, THEREFORE, BE IT ORDAINED BY THE GOVERNING BODY OF THE CITY OF LENEXA, KANSAS, AS FOLLOWS:

Section One. Authorization of Notes. That in order to provide funds to redeem and pay the Prior Notes and to pay costs of the Project now due or to become due in the immediate future, including necessary engineering, legal and incidental costs, there shall be issued and the City is hereby authorized to issue temporary notes of the City, designated City of Lenexa, Kansas, Temporary Notes, Project 128 (Old Kenneth Road), in the aggregate principal amount of Six Hundred Thousand Dollars ($600,000) (the "Notes"). The amount of the Notes together with other temporary notes heretofore issued to finance the Project which remain outstanding does not exceed the total estimated costs of said Project.

Section Two. Terms of the Notes. Said issue of Notes shall consist of bearer notes numbered 1 through 6 inclusive, each in the denomination of $100,000. Each of said Notes shall be dated March 1, 1996, shall mature by their stated terms and become due and payable on November 21, 1996. The Notes shall bear interest from their dated date, payable at maturity or upon redemption prior thereto as herein provided, at a rate of interest of 3.35% per annum (computed on the basis of actual days elapsed and a 360-day year composed of twelve 30-day months). The Notes shall be subject to redemption at the option of the City upon notice as hereinafter provided and shall be redeemed and cancelled contemporaneously with the issuance of general obligation improvement bonds of the City issued in lieu thereof to provide permanent financing of the Project.

Both principal of and interest on said Notes shall be payable in lawful money of the United States of America by check or draft at the office of the City Treasurer of the City upon presentation and surrender of said Notes.

The City reserves the right to redeem and pay said Notes, in whole or in part (and if in part in denominations of $100,000 selected by the City in its sole discretion), at any date prior to the stated maturity of said Notes by notice thereof given in writing by first class mail to the original purchaser of the Notes and to any known holder of the Notes or by the publication of such notice at least one time in a newspaper published or of general circulation in the metropolitan Kansas City area, and payment of said Notes, such publication of such notice or mailing of written notification of redemption to the original purchaser and the known holder to be at least ten days prior to the redemption date fixed in such notice. Notice of such redemption having been given as aforesaid, interest shall cease to accrue on said Notes from and after the redemption date.

Section Three. Security for the Notes. The full faith, credit and resources of the City of Lenexa, Kansas, shall be and the same are hereby irrevocably pledged for the prompt payment of the principal of and interest on the Notes.

The Governing Body of the City shall make provisions for the payment of said Notes by the issuance of renewal notes or general obligation bonds of the City to provide permanent financing of the Project upon the completion thereof. If said bonds shall not be so issued and the Notes shall not be so paid, the Governing Body shall levy and collect special assessments on property benefitted by the Project, and to the extent said special assessments shall not be so collected, the Governing Body shall levy and collect a tax upon all taxable tangible property within the territorial limits of the City in an amount sufficient to pay the principal of and interest on said Notes as the same become due and payable.

Section Four. Form of Notes. Each of said Notes shall be in customary form as provided by law, shall be signed by the Mayor and attested by the City Clerk of the City and shall have the seal of said City affixed thereto.

Section Five. Execution and Delivery. The Mayor and City Clerk of the City are hereby authorized and directed to prepare and execute the Notes herein authorized in the form and substance hereinbefore described and as provided by law and to procure the proper registration in the office of the City Clerk and in the office of the Treasurer of the State of Kansas, and when so executed and registered, said Notes shall be countersigned by the City Clerk and delivered to United Missouri Bank, the original purchaser thereof, upon payment of the purchase price therefor which shall not be less than 99.95% of the principal amount thereof plus accrued interest to the date of delivery thereof to the original purchaser thereof.

Section Six. Disposition of Proceeds. The proceeds of the sale of the Notes shall be deposited with the City Treasurer. The sum of $300,000 of such proceeds shall be used to redeem and retire the Prior Notes, and the balance of such proceeds shall be deposited in a special fund created for the purpose of paying costs and expenses of the Project.

Section Seven. Tax Covenants. The City covenants and agrees that (1) it will comply with each and every provision of Section 103 and Sections 141 through 150 of the Internal Revenue Code of 1986, as amended (the "Code"), that is or may become applicable to the Notes, necessary to maintain the exclusion from gross income for federal income tax purposes of the interest on the Notes, including but not limited to any provisions requiring the rebate of earnings on amounts held in funds or accounts created with respect to the Notes and (2) it will not use or permit the use of any of the proceeds of the Notes or other funds of the City nor take or permit any other action, or fail to take any action, if any such action or failure to act would adversely affect the exclusion from gross income for federal income tax purposes of the interest on the Notes; provided, however, the foregoing provision in (1) above shall be and become null and void if and to the extent that the City shall receive an opinion from nationally recognized bond counsel which concludes that compliance with the foregoing covenant and the provisions of the Code as provided in this section shall not be required to maintain and continue the tax-exempt status of the interest income on the Notes.

Section Eight. Further Authority. The duly elected and appointed officers of the City, including the Mayor, the City Clerk and the Finance Director, are hereby further authorized and directed to execute all documents and take such actions as they may deem necessary or advisable in order to carry out and perform the purposes of this Ordinance and to make ministerial alterations, changes or additions in the foregoing agreements, statements, instruments and other documents herein approved, authorized and confirmed which they may approve, and the execution or taking of such action shall be conclusive evidence of such necessity or advisability.

Section Nine. Effective Date. That this Ordinance shall take effect and be in force after its publication as provided by law.

PASSED by the Council the 20th day of February, 1996.

APPROVED by the Mayor the 20th day of February, 1996.

(S E A L)

Marcia Rinehart, Mayor

ATTEST:

Martha Neiser, City Clerk

APPROVED FOR FORM:

R.D. Wetzler, City Attorney

WII-tnmar126

(15879 - 1F-JC)

ORDINANCE NO. 1561

AN ORDINANCE AUTHORIZING AND PROVIDING FOR THE ISSUANCE AND DELIVERY OF TEMPORARY NOTES, PROJECT 126 (MISSION ROAD, 95TH STREET-103RD STREET), OF THE CITY OF LEAWOOD, KANSAS, IN THE PRINCIPAL AMOUNT OF $200,000 TO PROVIDE TEMPORARY FINANCING OF THE COST OF IMPROVEMENT OR REIMPROVEMENT OF MISSION ROAD, 95TH STREET-103RD STREET, INCLUDING GRADING, REGRADING, CURBING, RECURBING, GUTTERING, REGUTTERING, PAVING, REPAVING, MACADAMIZING, REMACADAMIZING, CONSTRUCTING, RECONSTRUCTING, OPENING, WIDENING, EXTENDING, ROUNDING CORNERS, STRAIGHTENING, RELOCATING, CONSTRUCTION OR RECONSTRUCTION OF ANY NECESSARY BRIDGES AND APPROACHES THERETO, VIADUCTS, OVERPASSES, UNDERPASSES, CULVERTS, STORM DRAINAGE, TRAFFICWAY ILLUMINATION, TRAFFIC CONTROL DEVICES, PEDESTRIAN WAYS, BICYCLE WAYS OR OTHER IMPROVEMENTS AND OTHER INCIDENTAL CONSTRUCTION COSTS, IN THE CITY OF LEAWOOD.

WHEREAS, pursuant to K.S.A. 12-685, et seq., as amended, and Ordinance No. 1330, the Governing Body of the City of Leawood, Kansas (the "City") has heretofore authorized the following described improvement project within the City, to wit: improvement of certain sections of Mission Road from 385 feet south of 95th Street to 385 feet south of 103rd Street within the City of Leawood (the "Project") at an estimated cost of $1,571,300; and

WHEREAS, the Project has been commenced and the City has heretofore issued its Temporary Notes, Project 126 (Mission Road, 95th Street-103rd Street), dated March 1, 1996, in the principal amount of $200,000 (the "Prior Notes") to provide funds to pay the costs of the Project heretofore incurred by the City and said Prior Notes become due and payable in the immediate future; and

WHEREAS, the City is authorized by law and in particular K.S.A. 10-123, as amended, to issue temporary notes of the City to provide funds to redeem and pay the Prior Notes as the same become due and payable.

NOW, THEREFORE, BE IT ORDAINED BY THE GOVERNING BODY OF THE CITY OF LEAWOOD, KANSAS, AS FOLLOWS:

Section One. Authorization of Notes. That in order to provide funds to redeem and pay the Prior Notes to become due in the immediate future there shall be issued and the City is hereby authorized to issue temporary notes of the City, designated City of Leawood, Kansas, Temporary Notes, Project 126 (Mission Road, 95th Street-103rd Street), in the aggregate principal amount of Two Hundred Thousand Dollars ($200,000) (the "Notes"). The amount of the Notes together with other temporary notes heretofore issued to finance the Project which remain outstanding does not exceed the total estimated costs of said Project.

Section Two. Terms of the Notes. Said issue of Notes shall consist of

bearer notes numbered 1 through 2 inclusive in the denomination of $100,000. Each of said Notes shall be dated March 1, 1996, shall mature by their stated terms and become due and payable on November 21, 1996. The Notes shall bear interest from their dated date, payable at maturity or upon redemption prior thereto as herein provided, at a rate of interest of 3.35% per annum (computed on the basis of actual days elapsed and a 360-day year composed of twelve 30-day months). The Notes shall be subject to redemption at the option of the City upon notice as hereinafter provided and shall be redeemed and cancelled contemporaneously with the issuance of general obligation improvement bonds of the City issued in lieu thereof to provide permanent financing of the Project.

Both principal of and interest on said Notes shall be payable in lawful money of the United States of America by check or draft at the office of the City Treasurer of the City upon presentation and surrender of said Notes.

The City reserves the right to redeem and pay said Notes, in whole or in part (and if in part in denominations of $100,000 selected by the City in its sole discretion), at any date prior to the stated maturity of said Notes by notice thereof given in writing by first class mail to the original purchaser of the Notes and to any known holder of the Notes or by the publication of such notice at least one time in a newspaper published or of general circulation in the metropolitan Kansas City area, and payment of said Notes, such publication of such notice or mailing of written notification of redemption to the original purchaser and the known holder to be at least ten days prior to the redemption date fixed in such notice. Notice of such redemption having been given as aforesaid, interest shall cease to accrue on said Notes from and after the redemption date.

Section Three. Security for the Notes. The full faith, credit and resources of the City of Leawood, Kansas, shall be and the same are hereby irrevocably pledged for the prompt payment of the principal of and interest on the Notes.

The Governing Body of the City shall make provisions for the payment of said Notes by the issuance of renewal notes or general obligation bonds of the City to provide permanent financing of the Project upon the completion thereof. If said bonds shall not be so issued and the Notes shall not be so paid, the Governing Body shall levy and collect a tax upon all taxable tangible property within the territorial limits of the City in an amount sufficient to pay the principal of and interest on said Notes as the same become due and payable.

Section Four. Form of Notes. Each of said Notes shall be in customary form as provided by law, shall be signed by the Mayor and attested by the City Clerk of the City and shall have the seal of said City affixed thereto.

Section Five. Execution and Delivery. The Mayor and City Clerk of the City

are hereby authorized and directed to prepare and execute the Notes herein authorized in the form and substance hereinbefore described and as provided by law and to procure the proper registration in the office of the City Clerk and in the office of the Treasurer of the State of Kansas, and when so executed and registered, said Notes shall be countersigned by the City Clerk and delivered to United Missouri Bank, the original purchaser thereof, upon payment of the purchase price therefor which shall not be less than 99.95% of the principal amount thereof plus accrued interest to the date of delivery thereof to the original purchaser thereof.

Section Six. Disposition of Proceeds. The proceeds of the sale of the Notes shall be deposited with the City Treasurer to be used to redeem and retire the Prior Notes.

Section Seven. Tax Covenants. The City covenants and agrees that (1) it will comply with each and every provision of Section 103 and Sections 141 through 150 of the Internal Revenue Code of 1986, as amended (the "Code"), that is or may become applicable to the Notes, necessary to maintain the exclusion from gross income for federal income tax purposes of the interest on the Notes, including but not limited to any provisions requiring the rebate of earnings on amounts held in funds or accounts created with respect to the Notes and (2) it will not use or permit the use of any of the proceeds of the Notes or other funds of the City nor take or permit any other action, or fail to take any action, if any such action or failure to act would adversely affect the exclusion from gross income for federal income tax purposes of the interest on the Notes; provided, however, the foregoing provision in (1) above shall be and become null and void if and to the extent that the City shall receive an opinion from nationally recognized bond counsel which concludes that compliance with the foregoing covenant and the provisions of the Code as provided in this section shall not be required to maintain and continue the tax-exempt status of the interest income on the Notes.

Section Eight. Further Authority. The duly elected and appointed officers of the City, including the Mayor, the City Clerk and the Finance Director, are hereby further authorized and directed to execute all documents and take such actions as they may deem necessary or advisable in order to carry out and perform the purposes of this Ordinance and to make ministerial alterations, changes or additions in the foregoing agreements, statements, instruments and other documents herein approved, authorized and confirmed which they may approve, and the execution or taking of such action shall be conclusive evidence of such necessity or advisability.

Section Nine. Effective Date. That this Ordinance shall take effect and be

in force after its publication as provided by law.

PASSED by the Council the 20th day of February, 1996.

APPROVED by the Mayor the 20th day of February, 1996.

(S E A L)

Marcia Rinehart

Marcia Rinehart, Mayor

ATTEST:

Martha Heizer

Martha Heizer, City Clerk

APPROVED FOR FORM:

R. S. Wetzler, City Attorney

WII-tnr126

AFFIDAVIT OF PUBLICATION

STATE OF KANSAS, JOHNSON COUNTY,ss: Georgiann Thacker being first Duly sworn, Deposes and says: That she is legal publications manager of THE JOHNSON COUNTY SUN, a semi-weekly newspaper printed in the State of Kansas, and published in and of general circulation in JOHNSON COUNTY, Kansas, and that said newspaper is not a trade, religious or fraternal publication.

Said newspaper is a semi-weekly published at least weekly 50 times a year; has been so published continuously and uninterruptedly in said county and state for a period of more than five years prior to the first publication of said notice; and has been admitted at the post office of SHAWNEE MISSION, KANSAS in said County as a second class matter.

That the attached notice is a true copy thereof and was published in the regular and entire issue of said newspaper for one consecutive day (weeks/days), the first publication thereof being made as aforesaid on the 23rd day of February 1996, with subsequent publication being made on the following dates:

_____, 19____ _____, 19____

_____, 19____ _____, 19____

Georgiann Thacker

Subscribed and sworn to before me this 23rd day of February 1996

Deanna J. Martasin
NOTARY PUBLIC

DEANNA J. MARTASIN
NOTARY PUBLIC
STATE OF KANSAS

My Commission Expires 1/05/2000

Printer's Fees 81.25

Additional Copies $_____

First published in The Johnson County Sun, Friday, February 23,1996

ORDINANCE NO. 1561

AN ORDINANCE AUTHORIZING AND PROVIDING FOR THE ISSUANCE AND DELIVERY OF TEMPORARY NOTES, PROJECT 126 (MISSION ROAD, 95TH STREET-103RD STREET), OF THE CITY OF LEAWOOD, KANSAS, IN THE PRINCIPAL AMOUNT OF $200,000 TO PROVIDE TEMPORARY FINANCING OF THE COST OF IMPROVEMENT OR REIMPROVEMENT OF MISSION ROAD, 95TH STREET-103RD STREET, INCLUDING GRADING, REGRADING, CURBING, RECURBING, GUTTERING, REGUTTERING, PAVING, REPAVING, MACADAMIZING, REMACADAMIZING, CONSTRUCTING, RECONSTRUCTING, OPENING, WIDENING, EXTENDING, ROUNDING CORNERS, STRAIGHTENING, RELOCATING, CONSTRUCTION OR RECONSTRUCTION OF ANY NECESSARY BRIDGES AND APPROACHES THERETO, VIADUCTS, OVERPASSES, UNDERPASSES, CULVERTS, STORM DRAINAGE, TRAFFICWAY ILLUMINATION, TRAFFIC CONTROL DEVICES, PEDESTRIAN WAYS, BICYCLE WAYS OR OTHER IMPROVEMENTS AND OTHER INCIDENTAL CONSTRUCTION COSTS, IN THE CITY OF LEAWOOD.

WHEREAS, pursuant to K.S.A. 12-685, et seq., as amended, and Ordinance No. 1330, the Governing Body of the City of Leawood, Kansas (the "City") has heretofore authorized the following described improvement project within the City, to wit: Improvement of certain sections of Mission Road from 386 feet south of 95th Street to 385 feet south of 103rd Street within the City of Leawood (the "Project") at an estimated cost of $1,571,300; and

WHEREAS, the Project has been commenced and the City has heretofore issued its Temporary Notes, Project 126 (Mission Road, 95th Street-103rd Street), dated March 1, 1996, in the principal amount of $200,000 (the "Prior Notes") to provide funds to pay the costs of the Project heretofore incurred by the City and said Prior Notes become due and payable in the immediate future; and

WHEREAS, the City is authorized by law and in particular K.S.A. 10-123, as amended, to issue temporary notes of the City to provide funds to redeem and pay the Prior Notes as the same become due and payable.

NOW, THEREFORE, BE IT ORDAINED BY THE GOVERNING BODY OF THE CITY OF LEAWOOD, KANSAS, AS FOLLOWS:

Section One. Authorization of Notes. That in order to provide funds to redeem and pay the Prior Notes to become due in the immediate future there shall be issued and the City is hereby authorized to issue temporary notes of the City, designated City of Leawood, Kansas, Temporary Notes, Project 126 (Mission Road, 95th Street-103rd Street), in the aggregate principal amount of Two Hundred Thousand Dollars ($200,000) (the "Notes"). The amount of the Notes together with other temporary notes heretofore issued to finance the Project which remain outstanding does not exceed the total estimated costs of said Project.

Section Two. Terms of the Notes. Said issue of Notes shall consist of bearer notes numbered 1 through 2 inclusive in the denomination of $100,000. Each of said Notes shall be dated March 1, 1996, shall mature by their stated terms and become due and payable on November 21, 1996. The Notes shall bear interest from their dated date, payable at maturity or upon redemption prior thereto as herein provided, at a rate of interest of 3.35% per annum (computed on the basis of actual days elapsed and a 360-day year composed of twelve 30-day months). The Notes shall be subject to redemption at the option of the City upon notice as hereinafter provided and shall be redeemed and cancelled contemporaneously with the issuance of general obligation improvement bonds of the City issued in lieu thereof to provide permanent financing of the Project.

Both principal of and interest on said Notes shall be payable in lawful money of the United States of America by check or draft at the office of the City Treasurer of the City upon presentation and surrender of said Notes.

The City reserves the right to redeem and pay said Notes, in whole or in part (and if in part in denominations of $100,000 selected by the City in its sole discretion), at any date prior to the stated maturity of said Notes by notice thereof given in writing by first class mail to the original purchaser of the Notes and to any known holder of the Notes or by the publication of such notice at least one time in a newspaper published or of general circulation in the metropolitan Kansas City area, and payment of said Notes, such publication of such notice or mailing of written notification of redemption to the original purchaser and the known holder to be at least ten days prior to the redemption date fixed in such notice. Notice of such redemption having been given as aforesaid, interest shall cease to accrue on said Notes from and after the redemption date.

Section Three. Security for the Notes. The full faith, credit and resources of the City of Leawood, Kansas, shall be and the same are hereby irrevocably pledged for the prompt payment of the principal of and interest on the Notes.

The Governing Body of the City shall make provisions for the payment of said Notes by the issuance of renewal notes or general obligation bonds of the City to provide permanent financing of the Project upon the completion thereof. If said bonds shall not be so issued and the Notes shall not be so paid, the Governing Body shall levy and collect a tax upon all taxable tangible property within the territorial limits of the City in an amount sufficient to pay the principal of and interest on said Notes as the same become due and payable.

Section Four. Form of Notes. Each of said Notes shall be in customary form as provided by law, shall be signed by the Mayor and attested by the City Clerk of the City and shall have the seal of said City affixed thereto.

Section Five. Execution and Delivery. The Mayor and City Clerk of the City are hereby authorized and directed to prepare and execute the Notes herein authorized in the form and substance hereinbefore described and as provided by law and to procure the proper registration in the office of the City Clerk and in the office of the Treasurer of the State of Kansas, and when so executed and registered, said Notes shall be countersigned by the City Clerk and delivered to United Missouri Bank, the original purchaser thereof, upon payment of the purchase price therefor which shall not be less than 99.95% of the principal amount thereof plus accrued interest to the date of delivery thereof to the original purchaser thereof.

Section Six. Disposition of Proceeds. The proceeds of the sale of the Notes shall be deposited with the City Treasurer to be used to redeem and retire the Prior Notes.

Section Seven. Tax Covenants. The City covenants and agrees that (1) it will comply with each and every provision of Section 103 and Sections 141 through 150 of the Internal Revenue Code of 1986, as amended (the "Code"), that is or may become applicable to the Notes, necessary to maintain the exclusion from gross income for federal income tax purposes of the interest on the Notes, including but not limited to any provisions requiring the rebate of earnings on amounts held in funds or accounts created with respect to the Notes and (2) it will not use or permit the use of any of the proceeds of the Notes or other funds of the City nor take or permit any other action, or fail to take any action, if any such action or failure to act would adversely affect the exclusion from gross income for federal income tax purposes of the interest on the Notes; provided, however, the foregoing provision in (1) above shall be and become null and void if and to the extent that the City shall receive an opinion from nationally recognized bond counsel which concludes that compliance with the foregoing covenant and the provisions of the Code as provided in this section shall not be required to maintain and continue the tax-exempt status of the interest income on the Notes.

Section Eight. Further Authority. The duly elected and appointed officers of the City, including the Mayor, the City Clerk and the Finance Director, are hereby further authorized and directed to execute all documents and take such actions as they may deem necessary or advisable in order to carry out and perform the purposes of this Ordinance and to make ministerial alterations, changes or additions in the foregoing agreements, statements, instruments and other documents herein approved, authorized and confirmed which they may approve, and the execution or taking of such action shall be conclusive evidence of such necessity or advisability.

Section Nine. Effective Date. That this Ordinance shall take effect and be in force after its publication as provided by law.

PASSED by the Council the 20th day of February, 1996.

APPROVED by the Mayor the 20th day of February, 1996.

(S E A L)

Marcia Rinehart

Marcia Rinehart, Mayor

ATTEST:

Martha Heizer

Martha Heizer, City Clerk

APPROVED AS TO FORM:

R. Stetler, City Attorney

WII-tax126

(15878 - 1F-JC)

ORDINANCE NO. 1560

AN ORDINANCE AUTHORIZING AND PROVIDING FOR THE ISSUANCE AND DELIVERY OF TEMPORARY NOTES, PROJECT 124 (135TH STREET [K-150], STATE LINE-NALL AVENUE), OF THE CITY OF LEAWOOD, KANSAS, IN THE PRINCIPAL AMOUNT OF $2,000,000 TO PROVIDE TEMPORARY FINANCING OF THE COST OF CONSTRUCTION OF IMPROVEMENTS TO 135TH STREET [K-150], STATE LINE-NALL AVENUE, INCLUDING GRADING, REGRADING, CURBING, RECURBING, GUTTERING, REGUTTERING, PAVING, REPAVING, MACADAMIZING, REMACADAMIZING, CONSTRUCTING, RECONSTRUCTING, OPENING, WIDENING, EXTENDING, ROUNDING CORNERS, STRAIGHTENING, RELOCATING, CONSTRUCTION OR RECONSTRUCTION OF ANY NECESSARY BRIDGES, APPROACHES THERETO, VIADUCTS, OVERPASSES, UNDERPASSES, CULVERTS, STORM DRAINAGE, TRAFFICWAY ILLUMINATION, TRAFFIC CONTROL DEVICES, PEDESTRIAN WAYS, BICYCLE WAYS, OR OTHER IMPROVEMENTS OR ANY TWO OR MORE OF SUCH IMPROVEMENTS OR REIMPROVEMENTS AND OTHER INCIDENTAL CONSTRUCTION COSTS, IN THE CITY OF LEAWOOD.

WHEREAS, pursuant to K.S.A. 12-685, et seq., as amended, and Ordinance No. 1203, the Governing Body of the City of Leawood, Kansas (the "City") has heretofore authorized the following described improvement project within the City, to wit: the improvement and reimprovement of 135th Street (K-150) located within the City of Leawood (State Line-Nall Avenue) (the "Project") at an estimated cost of $3,146,400; and

WHEREAS, the Project has been commenced and the City has heretofore issued its Temporary Notes, Project 124 (135th Street [K-150], State Line-Nall Avenue), dated March 1, 1996, in the principal amount of $500,000 (the "Prior Notes") to provide funds to pay the costs of the Project heretofore incurred by the City, said Prior Notes to become due and payable in the immediate future, and the City has incurred or expects to incur additional costs payable within the next nine months in the amount of $1,500,000; and

WHEREAS, the City is authorized by law and in particular K.S.A. 10-123, as amended, to issue temporary notes of the City to provide funds to redeem and pay the Prior Notes and to pay the costs of the Project as the same become due and payable.

NOW, THEREFORE, BE IT ORDAINED BY THE GOVERNING BODY OF THE CITY OF LEAWOOD, KANSAS, AS FOLLOWS:

Section One. Authorization of Notes. That in order to provide funds to redeem and pay the Prior Notes and to pay costs of the Project now due or to become due in the immediate future, including necessary engineering, legal and incidental costs, there shall be issued and the City is hereby authorized to issue temporary notes of the City, designated City of Leawood, Kansas, Temporary Notes,

Project 124 (135th Street [K-150], State Line-Nall Avenue), in the aggregate principal amount of Two Million Dollars ($2,000,000) (the "Notes"). The amount of the Notes together with other temporary notes heretofore issued to finance the Project which remain outstanding does not exceed the total estimated costs of said Project.

Section Two. Terms of the Notes. Said issue of Notes shall consist of bearer notes numbered 1 through 20 inclusive, each in the denomination of $100,000. Each of said Notes shall be dated March 1, 1996, shall mature by their stated terms and become due and payable on November 21, 1996. The Notes shall bear interest from their dated date, payable at maturity or upon redemption prior thereto as herein provided, at a rate of interest of 3.40% per annum (computed on the basis of actual days elapsed and a 360-day year composed of twelve 30-day months). The Notes shall be subject to redemption at the option of the City upon notice as hereinafter provided and shall be redeemed and cancelled contemporaneously with the issuance of general obligation improvement bonds of the City issued in lieu thereof to provide permanent financing of the Project.

Both principal of and interest on said Notes shall be payable in lawful money of the United States of America by check or draft at the office of the City Treasurer of the City upon presentation and surrender of said Notes.

The City reserves the right to redeem and pay said Notes, in whole or in part (and if in part in denominations of $100,000 selected by the City in its sole discretion), at any date prior to the stated maturity of said Notes by notice thereof given in writing by first class mail to the original purchaser of the Notes and to any known holder of the Notes or by the publication of such notice at least one time in a newspaper published or of general circulation in the metropolitan Kansas City area, and payment of said Notes, such publication of such notice or mailing of written notification of redemption to the original purchaser and the known holder to be at least ten days prior to the redemption date fixed in such notice. Notice of such redemption having been given as aforesaid, interest shall cease to accrue on said Notes from and after the redemption date.

Section Three. Security for the Notes. The full faith, credit and resources of the City of Leawood, Kansas, shall be and the same are hereby irrevocably pledged for the prompt payment of the principal of and interest on the Notes.

The Governing Body of the City shall make provisions for the payment of said Notes by the issuance of renewal notes or general obligation bonds of the City to provide permanent financing of the Project upon the completion thereof. If said bonds shall not be so issued and the Notes shall not be so paid, the Governing Body shall levy and collect a tax upon all taxable tangible property within the

territorial limits of the City in an amount sufficient to pay the principal of and interest on said Notes as the same become due and payable.

Section Four. Form of Notes. Each of said Notes shall be in customary form as provided by law, shall be signed by the Mayor and attested by the City Clerk of the City and shall have the seal of said City affixed thereto.

Section Five. Execution and Delivery. The Mayor and City Clerk of the City are hereby authorized and directed to prepare and execute the Notes herein authorized in the form and substance hereinbefore described and as provided by law and to procure the proper registration in the office of the City Clerk and in the office of the Treasurer of the State of Kansas, and when so executed and registered, said Notes shall be countersigned by the City Clerk and delivered to United Missouri Bank, the original purchaser thereof, upon payment of the purchase price therefor which shall not be less than 99.625% of the principal amount thereof plus accrued interest to the date of delivery thereof to the original purchaser thereof.

Section Six. Disposition of Proceeds. The proceeds of the sale of the Notes shall be deposited with the City Treasurer. The sum of $500,000 of such proceeds shall be used to redeem and retire the Prior Notes, and the balance of such proceeds shall be deposited in a special fund created for the purpose of paying costs and expenses of the Project.

Section Seven. Tax Covenants. The City covenants and agrees that (1) it will comply with each and every provision of Section 103 and Sections 141 through 150 of the Internal Revenue Code of 1986, as amended (the "Code"), that is or may become applicable to the Notes, necessary to maintain the exclusion from gross income for federal income tax purposes of the interest on the Notes, including but not limited to any provisions requiring the rebate of earnings on amounts held in funds or accounts created with respect to the Notes and (2) it will not use or permit the use of any of the proceeds of the Notes or other funds of the City nor take or permit any other action, or fail to take any action, if any such action or failure to act would adversely affect the exclusion from gross income for federal income tax purposes of the interest on the Notes; provided, however, the foregoing provision in (1) above shall be and become null and void if and to the extent that the City shall receive an opinion from nationally recognized bond counsel which concludes that compliance with the foregoing covenant and the provisions of the Code as provided in this section shall not be required to maintain and continue the tax-exempt status of the interest income on the Notes.

Section Eight. Further Authority. The duly elected and appointed officers of the City, including the Mayor, the City Clerk and the Finance Director, are

hereby further authorized and directed to execute all documents and take such actions as they may deem necessary or advisable in order to carry out and perform the purposes of this Ordinance and to make ministerial alterations, changes or additions in the foregoing agreements, statements, instruments and other documents herein approved, authorized and confirmed which they may approve, and the execution or taking of such action shall be conclusive evidence of such necessity or advisability.

Section Nine. Effective Date. That this Ordinance shall take effect and be in force after its publication as provided by law.

PASSED by the Council the 20th day of February, 1996.

APPROVED by the Mayor the 20th day of February, 1996.

(S E A L)

Marcia Rinehart

Marcia Rinehart, Mayor

ATTEST:

Martha Heizer

Martha Heizer, City Clerk

APPROVED FOR FORM:

R. S. Wetzler, City Attorney

WII-tnnmr124

AFFIDAVIT OF PUBLICATION

STATE OF KANSAS, JOHNSON COUNTY,ss: Georgiann Thacker being first Duly sworn, Deposes and says: That she is legal publications manager of THE JOHNSON COUNTY SUN, a semi-weekly newspaper printed in the State of Kansas, and published in and of general circulation in JOHNSON COUNTY, Kansas, and that said newspaper is not a trade, religious or fraternal publication.

Said newspaper is a semi-weekly published at least weekly 50 times a year; has been so published continuously and uninterruptedly in said county and state for a period of more than five years prior to the first publication of said notice; and has been admitted at the post office of SHAWNEE MISSION, KANSAS in said County as a second class matter.

That the attached notice is a true copy thereof and was published in the regular and entire issue of said newspaper for one consecutive day (weeks/days), the first publication thereof being made as aforesaid on the 23rd day of February 1996, with subsequent publication being made on the following dates:

_____, 19____ _____, 19____

_____, 19____ _____, 19____

Georgiann Thacker

Subscribed and sworn to before me this 23rd day of February 1996

Deanna J. Martasin
NOTARY PUBLIC

DEANNA J. MARTASIN
NOTARY PUBLIC
STATE OF KANSAS

My Commission Expires 1/25/2000

Printer's Fees 84.85

Additional Copies $_____

First published in The Johnson County Sun, Friday, February 23,1996

ORDINANCE NO. 1560

AN ORDINANCE AUTHORIZING AND PROVIDING FOR THE ISSUANCE AND DELIVERY OF TEMPORARY NOTES, PROJECT 124 (135TH STREET [K-150], STATE LINE-NALL AVENUE), OF THE CITY OF LEAWOOD, KANSAS, IN THE PRINCIPAL AMOUNT OF $2,000,000 TO PROVIDE TEMPORARY FINANCING OF THE COST OF CONSTRUCTION OF IMPROVEMENTS TO 135TH STREET (K-150), STATE LINE-NALL AVENUE, INCLUDING GRADING, REGRADING, CURBING, RECURBING, GUTTERING, REGUTTERING, PAVING, REPAVING, MACADAMIZING, REMACADAMIZING, CONSTRUCTING, RECONSTRUCTING, OPENING, WIDENING, EXTENDING, ROUNDING CORNERS, STRAIGHTENING, RELOCATING, CONSTRUCTION OR RECONSTRUCTION OF ANY NECESSARY BRIDGES, APPROACHES THERETO, VIADUCTS, OVERPASSES, UNDERPASSES, CULVERTS, STORM DRAINAGE, TRAFFICWAY ILLUMINATION, TRAFFIC CONTROL DEVICES, PEDESTRIAN WAYS, BICYCLE WAYS, OR OTHER IMPROVEMENTS OR ANY TWO OR MORE OF SUCH IMPROVEMENTS OR REIMPROVEMENTS AND OTHER INCIDENTAL CONSTRUCTION COSTS, IN THE CITY OF LEAWOOD.

WHEREAS, pursuant to K.S.A. 12-685, et seq., as amended, and Ordinance No. 1203, the Governing Body of the City of Leawood, Kansas (the "City") has heretofore authorized the following described improvement project within the City, to wit: the improvement and reimprovement of 135th Street (K-150) located within the City of Leawood (State Line-Nall Avenue) (the "Project") at an estimated cost of $3,146,400; and

WHEREAS, the Project has been commenced and the City has heretofore issued its Temporary Notes, Project 124 (135th Street [K-150], State Line-Nall Avenue), dated March 1, 1996, in the principal amount of $500,000 (the "Prior Notes") to provide funds to pay the costs of the Project heretofore incurred by the City, said Prior Notes to become due and payable in the immediate future, and the City has incurred or expects to incur additional costs payable within the next nine months in the amount of $1,500,000; and

WHEREAS, the City is authorized by law and in particular K.S.A. 10-123, as amended, to issue temporary notes of the City to provide funds to redeem and pay the Prior Notes and to pay the costs of the Project as the same become due and payable.

NOW, THEREFORE, BE IT ORDAINED BY THE GOVERNING BODY OF THE CITY OF LEAWOOD, KANSAS, AS FOLLOWS:

Section One. Authorization of Notes. That in order to provide funds to redeem and pay the Prior Notes and to pay costs of the Project now due or to become due in the immediate future, including necessary engineering, legal and incidental costs, there shall be issued and the City is hereby authorized to issue temporary notes of the City, designated City of Leawood, Kansas, Temporary Notes, Project 124 (135th Street (K-150), State Line-Nall Avenue), in the aggregate principal amount of Two Million Dollars ($2,000,000) (the "Notes"). The amount of the Notes together with other temporary notes heretofore issued to finance the Project which remain outstanding does not exceed the total estimated costs of said Project.

Section Two. Terms of the Notes. Said issue of Notes shall consist of bearer notes numbered 1 through 20 inclusive, each in the denomination of $100,000. Each of said Notes shall be dated March 1, 1996, shall mature by their stated terms and become due and payable on November 21, 1996. The Notes shall bear interest from their dated date, payable at maturity or upon redemption prior thereto as herein provided, at a rate of interest of 3.40% per annum (computed on the basis of actual days elapsed and a 360-day year composed of twelve 30-day months). The Notes shall be subject to redemption at the option of the City upon notice as hereinafter provided and shall be redeemed and cancelled contemporaneously with the issuance of general obligation improvement bonds of the City issued in lieu thereof to provide permanent financing of the Project.

Both principal of and interest on said Notes shall be payable in lawful money of the United States of America by check or draft at the office of the City Treasurer of the City upon presentation and surrender of said Notes.

The City reserves the right to redeem and pay said Notes, in whole or in part (and if in part in denominations of $100,000 selected by the City in its sole discretion), at any date prior to the stated maturity of said Notes by notice thereof given in writing by first class mail to the original purchaser of the Notes and to any known holder of the Notes or by the publication of such notice at least one time in a newspaper published or of general circulation in the metropolitan Kansas City area, and payment of said Notes, such publication of such notice or mailing of written notification of redemption to the original purchaser and the known holder to be at least ten days prior to the redemption date fixed in such notice. Notice of such redemption having been given as aforesaid, interest shall cease to accrue on said Notes from and after the redemption date.

Section Three. Security for the Notes. The full faith, credit and resources of the City of Leawood, Kansas, shall be and the same are hereby irrevocably pledged for the prompt payment of the principal of and interest on the Notes.

The Governing Body of the City shall make provisions for the payment of said Notes by the issuance of renewal notes or general obligation bonds of the City to provide permanent financing of the Project upon the completion thereof. If said bonds shall not be so issued and the Notes shall not be so paid, the Governing Body shall levy and collect a tax upon all taxable tangible property within the territorial limits of the City in an amount sufficient to pay the principal of and interest on said Notes as the same become due and payable.

Section Four. Form of Notes. Each of said Notes shall be in customary form as provided by law, shall be signed by the Mayor and attested by the City Clerk of the City and shall have the seal of said City affixed thereto.

Section Five. Execution and Delivery. The Mayor and City Clerk of the City are hereby authorized and directed to prepare and execute the Notes herein authorized in the form and substance hereinbefore described and as provided by law and to procure the proper registration in the office of the City Clerk and in the office of the Treasurer of the State of Kansas, and when so executed and registered, said Notes shall be countersigned by the City Clerk and delivered to United Missouri Bank, the original purchaser thereof, upon payment of the purchase price therefor which shall not be less than 99.625% of the principal amount thereof plus accrued interest to the date of delivery thereof to the original purchaser thereof.

Section Six. Disposition of Proceeds. The proceeds of the sale of the Notes shall be deposited with the City Treasurer. The sum of $500,000 of such proceeds shall be used to redeem and retire the Prior Notes, and the balance of such proceeds shall be deposited in a special fund created for the purpose of paying costs and expenses of the Project.

Section Seven. Tax Covenants. The City covenants and agrees that (1) it will comply with each and every provision of Section 103 and Sections 141 through 150 of the Internal Revenue Code of 1986, as amended (the "Code"), that is or may become applicable to the Notes, necessary to maintain the exclusion from gross income for federal income tax purposes of the interest on the Notes, including but not limited to any provisions requiring the rebate of earnings on amounts held in funds or accounts created with respect to the Notes and (2) it will not use or permit the use of any of the proceeds of the Notes or other funds of the City nor take or permit any other action, or fail to take any action, if any such action or failure to act would adversely affect the exclusion from gross income for federal income tax purposes of the interest on the Notes; provided, however, the foregoing provision in (1) above shall be and become null and void if and to the extent that the City shall receive an opinion from nationally recognized bond counsel which concludes that compliance with the foregoing covenant and the provisions of the Code as provided in this section shall not be required to maintain and continue the tax-exempt status of the interest income on the Notes.

Section Eight. Further Authority. The duly elected and appointed officers of the City, including the Mayor, the City Clerk and the Finance Director, are hereby further authorized and directed to execute all documents and take such actions as they may deem necessary or advisable in order to carry out and perform the purposes of this Ordinance and to make ministerial alterations, changes or additions in the foregoing agreements, statements, instruments and other documents herein approved, authorized and confirmed which they may approve, and the execution or taking of such action shall be conclusive evidence of such necessity or advisability.

Section Nine. Effective Date. That this Ordinance shall take effect and be in force after its publication as provided by law.

PASSED by the Council the 20th day of February, 1996.

APPROVED by the Mayor the 20th day of February, 1996.

(S E A L)

Marcia Rinehart, Mayor

ATTEST:

Martha Meizer, City Clerk

APPROVED FOR FORM:

R. S. Wetzler, City Attorney

WII-tnnmr124

(15877 - 1F-JC)

ORDINANCE NO. 1559

AN ORDINANCE AUTHORIZING AND PROVIDING FOR THE ISSUANCE AND DELIVERY OF TEMPORARY NOTES, PROJECT 108 (COLLEGE BOULEVARD), OF THE CITY OF LEAWOOD, KANSAS, IN THE PRINCIPAL AMOUNT OF $3,800,000 TO PROVIDE TEMPORARY FINANCING OF THE COST OF IMPROVEMENT OR REIMPROVEMENT OF COLLEGE BOULEVARD, INCLUDING GRADING, REGRADING, CURBING, RECURBING, GUTTERING, REGUTTERING, PAVING, REPAVING, MACADAMIZING, REMACADAMIZING, CONSTRUCTING, RECONSTRUCTING, OPENING, WIDENING, EXTENDING, ROUNDING CORNERS, STRAIGHTENING, RELOCATING, CONSTRUCTION OR RECONSTRUCTION OF ANY NECESSARY BRIDGES AND APPROACHES THERETO, VIADUCTS, OVERPASSES, UNDERPASSES, CULVERTS, STORM DRAINAGE, TRAFFICWAY ILLUMINATION, TRAFFIC CONTROL DEVICES, PEDESTRIAN WAYS, BICYCLE WAYS OR OTHER IMPROVEMENTS AND OTHER INCIDENTAL CONSTRUCTION COSTS, IN THE CITY OF LEAWOOD.

WHEREAS, pursuant to K.S.A. 12-685, et seq., as amended, and Ordinance No. 1488, the Governing Body of the City of Leawood, Kansas (the "City") has heretofore authorized the following described improvement project within the City, to wit: the improvement or reimprovement of College Boulevard located within the City of Leawood (the "Project") at an estimated cost of $13,795,873.00; and

WHEREAS, the Project has been commenced and the City has heretofore issued its Temporary Notes, Project 108 (College Blvd.), dated March 1, 1996, in the principal amount of $2,300,000 (the "Prior Notes") to provide funds to pay the costs of the Project heretofore incurred by the City, said Prior Notes to become due and payable in the immediate future, and the City has incurred or expects to incur additional costs payable within the next nine months in the amount of $1,500,000; and

WHEREAS, the City is authorized by law and in particular K.S.A. 10-123, as amended, to issue temporary notes of the City to provide funds to redeem and pay the Prior Notes and to pay the costs of the Project as the same become due and payable.

NOW, THEREFORE, BE IT ORDAINED BY THE GOVERNING BODY OF THE CITY OF LEAWOOD, KANSAS, AS FOLLOWS:

Section One. Authorization of Notes. That in order to provide funds to redeem and pay the Prior Notes and to pay costs of the Project now due or to become due in the immediate future, including necessary

engineering, legal and incidental costs, there shall be issued and the City is hereby authorized to issue temporary notes of the City, designated City of Leawood, Kansas, Temporary Notes, Project 108 (College Blvd.), in the aggregate principal amount of Three Million Eight Hundred Thousand Dollars ($3,800,000.00) (the "Notes"). The amount of the Notes together with other temporary notes heretofore issued to finance the Project which remain outstanding does not exceed the total estimated costs of said Project.

Section Two. Terms of the Notes. Said issue of Notes shall consist of bearer notes numbered 1 through 38 inclusive, each in the denomination of $100,000. Each of said notes shall be dated March 1, 1996, shall mature by their stated terms and become due and payable on November 21, 1996. The Notes shall bear interest from their dated date, payable at maturity or upon redemption prior thereto as herein provided, at a rate of interest of 3.40% per annum (computed on the basis of actual days elapsed and a 360-day year composed of twelve 30-day months). The Notes shall be subject to redemption at the option of the City upon notice as hereinafter provided and shall be redeemed and cancelled contemporaneously with the issuance of general obligation improvement bonds of the City issued in lieu thereof to provide permanent financing of the Project.

Both principal of and interest on said Notes shall be payable in lawful money of the United States of America by check or draft at the office of the City Treasurer of the City upon presentation and surrender of said Notes.

The City reserves the right to redeem and pay said Notes, in whole or in part (and if in part in denominations of $100,000 selected by the City in its sole discretion), at any date prior to the stated maturity of said Notes by notice thereof given in writing by first class mail to the original purchaser of the Notes and to any known holder of the Notes or by the publication of such notice at least one time in a newspaper published or of general circulation in the metropolitan Kansas City area, and payment of said Notes, such publication of such notice or mailing of written notification of redemption to the original purchaser and the known holder to be at least ten days prior to the redemption date fixed in such notice. Notice of such redemption having been given as aforesaid, interest shall cease to accrue on said Notes from and after the redemption date.

Section Three. Security for the Notes. The full faith, credit and

resources of the City of Leawood, Kansas, shall be and the same are hereby irrevocably pledged for the prompt payment of the principal of and interest on the Notes.

The Governing Body of the City shall make provisions for the payment of said Notes by the issuance of renewal notes or general obligation bonds of the City to provide permanent financing of the Project upon the completion thereof. If said bonds shall not be so issued and the Notes shall not be so paid, the Governing body shall levy and collect a tax upon all taxable tangible property within the territorial limits of the City in an amount sufficient to pay the principal of and interest on said Notes as the same become due and payable.

Section Four. Form of Notes. Each of said Notes shall be in customary form as provided by law, shall be signed by the Mayor and attested by the City Clerk of the City and shall have the seal of said City affixed thereto.

Section Five. Execution and Delivery. The Mayor and City Clerk of the City are hereby authorized and directed to prepare and execute the Notes herein authorized in the form and substance hereinbefore described and as provided by law and to procure the proper registration in the office of the City Clerk and in the office of the Treasurer of the State of Kansas, and when so executed and registered, said Notes shall be countersigned by the City Clerk and delivered to United Missouri Bank, the original purchaser thereof, upon payment of the purchase price therefor which shall not be less than 99.625% of the principal amount thereof plus accrued interest to the date of delivery thereof to the original purchaser thereof.

Section Six. Disposition of Proceeds. The proceeds of the sale of the Notes shall be deposited with the City Treasurer. The sum of $2,300,000 of such proceeds shall be used to redeem and retire the Prior Notes, and the balance of such proceeds shall be deposited in a special fund created for the purpose of paying costs and expenses of the Project.

Section Seven. Tax Covenants. The City covenants and agrees that (1) it will comply with each and every provision of Section 103 and Sections 141 through 150 of the Internal Revenue Code of 1986, as amended (the "Code"), that is or may become applicable to the Notes, necessary to maintain the exclusion from gross income for federal income tax purposes of the interest on the Notes, including but not limited to any provisions

requiring the rebate of earnings on amounts held in funds or accounts created with respect to the Notes and (2) it will not use or permit the use of any of the proceeds of the Notes or other funds of the City nor take or permit any other action, or fail to take any action, if any such action or failure to act would adversely affect the exclusion from gross income for federal income tax purposes of the interest on the Notes; provided, however, the foregoing provision in (1) above shall be and become null and void if and to the extent that the City shall receive an opinion from nationally recognized bond counsel which concludes that compliance with the foregoing covenant and the provisions of the Code as provided in this section shall not be required to maintain and continue the tax-exempt status of the interest income on the Notes.

Section Eight. Further Authority. The duly elected and appointed officers of the City, including the Mayor, the City Clerk and the Finance Director, are hereby further authorized and directed to execute all documents and take such actions as they may deem necessary or advisable in order to carry out and perform the purposes of this Ordinance and to make ministerial alterations, changes or additions in the foregoing agreements, statements, instruments and other documents herein approved, authorized and confirmed which they may approve, and the execution or taking of such action shall be conclusive evidence of such necessity or advisability.

Section Nine. Effective Date. That this Ordinance shall take effect and be in force after its publication as provided by law.

PASSED by the Council the 20th day of February, 1996.

APPROVED by the Mayor the 20th day of February, 1996.

(S E A L)

Marcia Rinehart

Marcia Rinehart, Mayor

ATTEST:

Martha Heizer

Martha Heizer, City Clerk

APPROVED FOR FORM:

R. S. Wetzler, City Attorney

WII:tnnmr108

AFFIDAVIT OF PUBLICATION

STATE OF KANSAS, JOHNSON COUNTY,ss: Georgiann Thacker being first Duly sworn, Deposes and says: That she is legal publications manager of THE JOHNSON COUNTY SUN, a semi-weekly newspaper printed in the State of Kansas, and published in and of general circulation in JOHNSON COUNTY, Kansas, and that said newspaper is not a trade, religious or fraternal publication.

Said newspaper is a semi-weekly published at least weekly 50 times a year; has been so published continuously and uninterruptedly in said county and state for a period of more than five years prior to the first publication of said notice; and has been admitted at the post office of SHAWNEE MISSION, KANSAS in said County as a second class matter.

That the attached notice is a true copy thereof and was published in the regular and entire issue of said newspaper for one consecutive day (weeks/days), the first publication thereof being made as aforesaid on the 23rd day of February 1996, with subsequent publication being made on the following dates:

_____, 19____ _____, 19____

_____, 19____ _____, 19____

Georgiann Thacker

Subscribed and sworn to before me this 23rd day of February 1996

Deanna J. Martasin
NOTARY PUBLIC

My Commission Expires 1/25/2000

Printer's Fees 92.77

Additional Copies $_____

DEANNA J. MARTASIN
NOTARY PUBLIC
STATE OF KANSAS

First published in The Johnson County Sun, Friday, February 23, 1996

ORDINANCE NO. 1559

AN ORDINANCE AUTHORIZING AND PROVIDING FOR THE ISSUANCE AND DELIVERY OF TEMPORARY NOTES, PROJECT 108 (COLLEGE BOULEVARD), OF THE CITY OF LENWOOD, KANSAS, IN THE PRINCIPAL AMOUNT OF $3,800,000 TO PROVIDE TEMPORARY FINANCING OF THE COST OF IMPROVEMENT OR REIMPROVEMENT OF COLLEGE BOULEVARD, INCLUDING GRADING, REGRADING, CURBING, RECURBING, GUTTERING, GUTTERING, PAVING, REPAVING, MACADAMIZING, REMACADAMIZING, CONSTRUCTING, RECONSTRUCTING, OPENING, WIDENING, EXTENDING, NOMENCLATURE, STRIPING, RELOCATING, CONSTRUCTION OR RECONSTRUCTION OF ANY NECESSARY BRIDGES AND APPROACHES THERETO, VIADUCTS, OVERPASSES, UNDERPASSES, CULVERTS, STORM DRAINAGE, TRAFFICANT ILLUMINATION, TRAFFIC CONTROL DEVICES, PEDESTRIAN WAYS, BICYCLE WAYS OR OTHER IMPROVEMENTS AND OTHER INCIDENTAL CONSTRUCTION COSTS, IN THE CITY OF LENWOOD.

WHEREAS, pursuant to K.S.A. 12-685, EX SEQ., as amended, and ordinance No. 1488, the governing body of the City of Lenwood, Kansas (the "City") has heretofore authorized the following described improvement project within the City, to wit: the improvement or reimprovement of College Boulevard located within the City of Lenwood (the "Project") at an estimated cost of $13,795,813.00; and

WHEREAS, the Project has been commenced and the City has heretofore issued its Temporary Notes, Project 108 (College Blvd.), dated March 1, 1995, in the principal amount of $2,300,000 (the "Prior Notes") to provide funds to pay the costs of the Project heretofore incurred by the City, said Prior Notes to become due and payable in the immediate future, and the City has incurred or expects to incur additional costs payable within the next nine months in the amount of $1,500,000; and

WHEREAS, the City is authorized by law and in particular K.S.A. 10-123, as amended, to issue temporary notes of the City to provide funds to redeem and pay the Prior Notes and to pay the costs of the Project as the same become due and payable.

NOW, THEREFORE, BE IT ORDAINED BY THE GOVERNING BODY OF THE CITY OF LENWOOD, KANSAS, AS FOLLOWS:

Section One. Authorization of Notes. That in order to provide funds to redeem and pay the Prior Notes and to pay costs of the Project to become due in the immediate future, including necessary engineering, legal and incidental costs, there shall be issued and the City is hereby authorized to issue temporary notes of the City, designated City of Lenwood, Kansas, Temporary Notes, Project 108 (College Blvd.), in the aggregate principal amount of three million eight hundred thousand dollars ($3,800,000.00) (the "Notes"): the amount of the Notes together with other temporary notes heretofore issued to finance the Project which remain outstanding does not exceed the total estimated costs of said Project.

Section Two. Terms of the Notes. Said issue of Notes shall consist of twenty notes numbered 1 through 38 inclusive, each in the denomination of $100,000. Each of said notes shall be dated March 1, 1996, shall mature by their stated terms and become due and payable on November 21, 1996. The Notes shall bear interest from their dated date, payable at maturity or upon redemption prior thereto as herein provided, at a rate of interest of 3.40% per annum (computed on the basis of actual days elapsed and a 360-day year composed of twelve 30-day months). The Notes shall be subject to redemption at the option of the City upon notice as hereinafter provided and shall be redeemed and cancelled contemporaneously with the issuance of general obligation improvement bonds of the City issued in lieu thereof to provide permanent financing of the Project.

Both principal of and interest on said Notes shall be payable in lawful money of the United States of America by check or draft at the office of the City Treasurer of the City upon presentation and surrender of said Notes.

The City reserves the right to redeem and pay said Notes, in whole or in part (and if in part in denominations of $100,000 selected by the City in its sole discretion), at any date prior to the stated maturity of said Notes by notice thereof given in writing by first class mail to the original purchaser of the Notes and to any known holder of the Notes or by publication of such notice at least one time in a newspaper published or of general circulation in the metropolitan Kansas City area, and payment of said Notes, such publication of such notice or mailing of written notification of redemption to the original purchaser and the known holder to be at least ten days prior to the redemption date fixed in such notice. Notice of such redemption having been given as aforesaid, interest shall cease to accrue on said Notes from and after the redemption date.

Section Three. Security for the Notes. The full faith, credit and resources of the City of Lenwood, Kansas, shall be and the same are hereby irrevocably pledged for the prompt payment of the principal of and interest on the Notes.

The governing body of the City shall make provisions for the payment of said Notes by the issuance of renewal notes or general obligation bonds of the City to provide permanent financing of the Project upon the completion thereof. If said bonds shall not be so issued and the Notes shall not be so paid, the governing body shall levy and collect a tax upon all taxable tangible property within the territorial limits of the City in an amount sufficient to pay the principal of and interest on said Notes as the same become due and payable.

Section Four. Form of Notes. Each of said Notes shall be in customary form as provided by law, shall be signed by the Mayor and attested by the City Clerk of the City and shall have the seal of said City affixed thereto.

Section Five. Execution and Delivery. The Mayor and City Clerk of the City are hereby authorized and directed to prepare and execute the Notes herein authorized in the form and substance hereinbefore described and as provided by law and to procure the proper registration in the office of the City Clerk and in the office of the Treasurer of the State of Kansas, and when so executed and registered, said Notes shall be counterfeited by the City Clerk and delivered to United Missouri Bank, the original purchaser thereof, upon payment of the purchase price therefor which shall not be less than 99.634% of the principal amount thereof plus accrued interest to the date of delivery thereof to the original purchaser thereof.

Section Six. Redemption and Delivery. The City covenants and agrees that (1) it will comply with each and every provision of section 103 and sections 141 through 150 of the Internal Revenue Code of 1986, as amended (the "Code"), that is or may become applicable to the Notes, necessary to maintain the exclusion from gross income for federal income tax purposes of the interest on the Notes, including but not limited to any provisions regulating the rebate of earnings on amounts held in funds or accounts created with respect to the Notes and (2) it will not use or permit the use of any of the proceeds of the Notes or other funds of the City nor take or permit any other action, or fail to take any action, if any such action or failure to act would adversely affect the exclusion from gross income for federal income tax purposes of the interest on the Notes; provided, however, the foregoing provision in (1) above shall be and become void if and to the extent that the City shall receive an opinion from nationally recognized bond counsel which concludes that compliance with the foregoing covenant and the provisions of the Code as provided in this section shall not be required to maintain and continue the tax-exempt status of the interest income on the Notes.

The duly elected and appointed officers of the City, including the Mayor, the City Clerk and the Finance Director, are hereby further authorized and directed to execute all documents and take such actions as they may deem necessary or advisable in order to carry out and perform the purposes of this ordinance and to make ministerial alterations, changes or additions in the foregoing agreements, statements, instruments and other documents herein approved, authorized and confirmed which they may approve, and the execution or taking of such action shall be conclusive evidence of such necessity or advisability.

Section Nine. Effective Date. That this ordinance shall take effect and be in force after its publication as provided by law.

PASSED by the Council the 20th day of February, 1996.

APPROVED by the Mayor the 20th day of February, 1996.

(S E A L)

ATTEST:

Martha Holzer, City Clerk

Marcia Hinshaw, Mayor

APPROVED FOR FORM:

M. R. Meierhoff, City Attorney

WILLIAMS#106

(15876 - 1F-JC)

exhibits in file

ORDINANCE NO. 1558

AN ORDINANCE AUTHORIZING THE ISSUANCE OF $18,860,000 PRINCIPAL AMOUNT OF GENERAL OBLIGATION REFUNDING AND IMPROVEMENT BONDS, SERIES 1996, OF THE CITY OF LEAWOOD, KANSAS, FOR THE PURPOSE OF PROVIDING FUNDS TO REFUND CERTAIN OUTSTANDING GENERAL OBLIGATION BONDS OF THE CITY AND TO FINANCE THE COST OF CERTAIN IMPROVEMENTS WITHIN THE CITY; PRESCRIBING THE FORM AND DETAILS OF SAID BONDS AND THE COVENANTS AND AGREEMENTS MADE BY THE CITY TO FACILITATE AND PROTECT THE PAYMENT THEREOF; MAKING PROVISION FOR THE COLLECTION OF AN ANNUAL TAX FOR THE PURPOSE OF PAYING THE PRINCIPAL OF AND INTEREST ON SAID BONDS AS THEY BECOME DUE; AND PROVIDING FOR EXECUTION OF CERTAIN AGREEMENTS IN CONNECTION THEREWITH.

WHEREAS, pursuant to K.S.A. 12-631s et seq., K.S.A. 12-685 et seq., K.S.A. 6a01 et seq., K.S.A 12-1301 et seq., and K.S.A. 12-1736 et seq., each as amended, and other provisions of the laws of the State of Kansas applicable thereto, by proceedings duly had, the City of Leawood, Kansas (the "City") has heretofore issued the following described general obligation bonds of the City:

(a) General Obligation Improvement Bonds, Series 1990-A, dated October 1, 1990, in the original principal amount of $1,848,653 (the "Series 1990 Bonds") pursuant to Ordinance No. 1186 of the City adopted October 2, 1990, of which Series 1990 Bonds in the aggregate principal amount of $880,000 remain outstanding and unpaid;

(b) General Obligation Improvement Bonds, Series 1991-A, dated December 1, 1991, in the original principal amount of $5,143,000 (the "Series 1991 Bonds") pursuant to Ordinance No. 1263 of the City adopted November 12, 1991, of which Series 1991 Bonds in the aggregate principal amount of $4,335,000 remain outstanding and unpaid;

(c) General Obligation Improvement Bonds, Series 1992-B, dated December 1, 1992, in the original principal amount of $2,046,000 (the "Series 1992B Bonds") pursuant to Ordinance No. 1320 of the City adopted December 7, 1992, of which Series 1992B Bonds in the aggregate principal amount of $1,765,000 remain outstanding and unpaid; and

(d) General Obligation Improvement Bonds, Series 1994-A, dated August 15, 1994, in the original principal amount of $8,300,000 (the "Series 1994 Bonds") pursuant to Ordinance No. 1420 of the City adopted August 1, 1994, of which Series

1994 Bonds in the aggregate principal amount of $8,130,000 remain outstanding and unpaid;

(collectively, the "Prior Bonds") for the purpose of providing funds to pay the costs of certain public improvements in the City (the "Prior Improvements") as described in the ordinances identified above authorizing the issuance of the Prior Bonds (the "Prior Ordinances"); and

WHEREAS, in order to achieve certain economic efficiencies and interest cost savings and to provide an orderly plan of financing for the City, it is hereby found and determined to be desirable and in the best interest of the City and its inhabitants that the City issue its general obligation bonds pursuant to K.S.A. 10-427 et seq., as amended, to provide funds to refund in advance of their respective maturities portions of the Prior Bonds, as follows:

(a) Series 1990 Bonds maturing by their stated terms in the years 1999 through 2002, inclusive, in the aggregate principal amount of $460,000 (the "Refunded Series 1990 Bonds");

(b) Series 1991 Bonds maturing by their stated terms in the years 2000 through 2007, inclusive, in the aggregate principal amount of $2,790,000 (the "Refunded Series 1991 Bonds");

(c) Series 1992B Bonds maturing by their stated terms in the years 2001 through 2008, inclusive, in the aggregate principal amount of $1,080,000 (the "Refunded Series 1992B Bonds"); and

(d) Series 1994 Bonds maturing by their stated terms in the years 2002 through 2016, inclusive, in the aggregate principal amount of $6,140,000 (the "Refunded Series 1994 Bonds");

(collectively, the "Refunded Bonds"); and

WHEREAS, pursuant to K.S.A. 12-6a01, et seq., 12-685, et seq., 12-1302, et seq., and 14-523, et seq., each as amended, and other provisions of the laws of the State of Kansas applicable thereto, by proceedings duly had, the governing body of the City has heretofore authorized the following described improvements within the City (the "Series 1996 Improvements"):

(a) Construction of improvements to Mission Road between College Boulevard and Interstate 435, including necessary appurtenances, pursuant to K.S.A. 12-685 et seq., and Ordinance No. 1204;

(b) Construction of improvements to 143rd Street at Mission Road, including necessary appurtenances, pursuant to K.S.A. 12-6a01 et seq., and Resolution No. 1107 (the "143rd Street Improvement"); and

(c) Construction of improvements to State Line Road extending from 112th Terrace to 123rd Street, including necessary appurtenances, pursuant to K.S.A. 12-685 et seq., K.S.A. 12-6a01 et seq., and Resolution No. 1106 (the "State Line Phase II Improvement");

(d) Construction of improvements to State Line Road extending from 123rd Street to 135th Street, including necessary appurtenances, pursuant to K.S.A. 12-685 et seq., and Ordinance No. 1399;

(e) Construction of improvements to Mission Road between 151st Street and 155th Street, including necessary appurtenances, pursuant to K.S.A. 12-685 et seq., and Ordinance No. 1347;

(f) Construction of improvements to Bell Drive and Iron Horse Drive, including necessary appurtenances, pursuant to K.S.A. 12-6a01 et seq., and Resolution No. 1153 (the "Bell and Iron Horse Improvements")

(g) Acquisition of land in the vicinity of 143rd Street and Overbrook as the site for a future public works facility, pursuant to K.S.A. 12-1302 et seq., and Ordinance No. 1483; and

(h) Construction of storm water sewers and drains in the vicinity of 8435 Cherokee Lane and on Lee Boulevard between 97th Street and 98th Street, pursuant to K.S.A. 14-523 et seq., and Ordinance No. 1470;

and

WHEREAS, all legal requirements pertaining to the Series 1996 Improvements have been complied with, and the governing body of the City now finds and determines that the total cost of the Series 1996 Improvements including construction financing and related expenses is not less than $8,555,878.00 with $1,203,340.62 of the cost to be paid by the owners of the property within the City benefited by the 143rd Street Improvement, the State Line Phase II Improvement and the Bell and Iron Horse Improvements (collectively, the "Series 1996 Benefit District Improvements") and $7,352,537.38 of the cost to be paid by the City at large, and that property owners benefitted by the Series 1996 Benefit District Improvements have paid $790,878.00 of their respective assessments on account of the Series 1996 Benefit District Improvements and there are no other funds available in the City treasury to pay the remainder of the cost of the Series 1996 Improvements leaving $7,765,000.00 to be paid by the issuance and sale of the City's general obligation bonds; and

WHEREAS, the governing body of the City is authorized by law to issue general obligation bonds of the City to finance the costs of the Series 1996 Improvements; and

WHEREAS, the City hereby finds and determines that it is necessary and advisable to refund the Refunded Bonds and to finance the cost of the Series 1996 Improvements and

costs of issuance of the Bonds as herein provided by the issuance of General Obligation Refunding and Improvement Bonds, Series 1996, in the principal amount of $18,860,000 (the "Bonds") as herein provided;

NOW, THEREFORE, BE IT ORDAINED BY THE GOVERNING BODY OF THE CITY OF LEAWOOD, KANSAS, AS FOLLOWS:

ARTICLE I

DEFINITIONS

Section 101. Definitions of Words and Terms. In addition to words and terms defined in the recitals and elsewhere in this Ordinance, the following words and terms as used in this Ordinance shall have the following meanings, unless some other meaning is plainly intended:

"Beneficial Owner" shall mean, whenever used with respect to a Bond herein authorized, the person in whose name such bond is recorded as the beneficial owner of such Bond by a Participant on the records of such Participant, or such person's subrogee.

"Bond Registrar" means the UMB Bank Kansas in the City of Kansas City, Kansas, and its successors or assigns.

"Cede & Co." shall mean Cede & Co., the nominee of the Depository, and any successor nominee of the Depository with respect to the Bonds.

"Continuing Disclosure Certificate" means the certificate executed by the City in the form attached hereto as Exhibit E.

"Cost of Issuance Fund" means the Series 1996 Cost of Issuance Fund established with the Escrow Trustee by Section 501 of this Ordinance and the Escrow Agreement.

"Depository" shall mean The Depository Trust Company of New York, New York.

"Escrow Agreement" means the Escrow Trust Agreement between the City and the Escrow Trustee in the form attached hereto as Exhibit C.

"Escrow Fund" means the City of Leawood, Kansas Escrow Fund for General Obligation Improvement Bonds, Series 1990, Series 1991, Series 1992B and Series 1994 established with the Escrow Trustee by Section 501 of this Ordinance and the Escrow Agreement.

"Escrow Reinvestment Agreement" means the Escrow Reinvestment Agreement between the Escrow Trustee and the Provider in the form appended to the Escrow Agreement.

"Escrow Trustee" means UMB Bank Kansas in the City of Kansas City, Kansas in its capacity as escrow trustee under the Escrow Agreement.

"Improvement Fund" means the Series 1996 Improvement Fund created by Section 501 of this Ordinance.

"Issuer's Instruction Agreement" means the Issuer's Instruction Agreement between the City and the Provider in the form appended to the Escrow Agreement.

"Ordinance" means this Ordinance as from time to time amended in accordance with the terms hereof.

"Participant" shall mean any broker-dealer, bank or other financial institution for which the Depository holds Bonds as securities depository.

"Participating Underwriter" shall have the meaning ascribed thereto in the Continuing Disclosure Certificate.

"Paying Agent" means the UMB Bank Kansas, in the City of Kansas City, Kansas, and its successors and assigns.

"Provider" means Chemical Bank, a New York banking corporation, its successors and permitted assigns.

"Principal and Interest Fund" means the Principal and Interest Fund for the City of Leawood, Kansas General Obligation Refunding Improvement Bonds, Series 1996, created by Section 501 of this Ordinance.

Representation Letter" shall mean the Representation Letter from the City and the Bond Registrar to the Depository with respect to the Bonds, substantially in the form attached to this Ordinance as Exhibit B.

"Underwriters" means George K. Baum & Company, Kansas City, Missouri.

ARTICLE II

AUTHORIZATION OF THE BONDS

Section 201. Authorization of the Bonds. The Bonds of the City are authorized and directed to be issued in the principal amount of $18,860,000 for the purpose of providing funds to refund the Refunded Bonds in advance of their maturities and to finance the costs of the Series 1996 Improvements, as provided in this Ordinance.

The Bonds shall be designated "General Obligation Refunding and Improvement Bonds, Series 1996," and shall be composed of and issued in two separate series designated

"General Obligation Refunding Bonds, Series 1996-A", in the aggregate principal amount of $11,095,000 (the "Series 1996A" Bonds), and "General Obligation Improvement Bonds, Series 1996B", in the aggregate principal amount of $7,765,000.00 (the "Series 1996B Bonds").

Section 202. Security for the Bonds. The Bonds shall be and constitute general obligations of the City, and the full faith and credit of the City is pledged to the payment of the principal of and interest on the Bonds as herein provided.

The Series 1996A Bonds shall be payable in part from special assessments levied against properties benefited by the Prior Improvements financed in part with the proceeds of the Refunded Bonds and, if not so paid, from ad valorem taxes which may be levied without limitation as to rate or amount upon all taxable tangible property, real and personal, within the territorial limits of the City, and the balance shall be payable from ad valorem taxes which may be levied without limitation as to rate or amount upon all the taxable tangible property, real and personal, within the territorial limits of the City.

The Series 1996B Bonds shall be payable in part from special assessments levied against properties benefitted by the Series 1996 Benefit District Improvements and, if not so paid, from ad valorem taxes which may be levied without limitation as to rate or amount upon all taxable tangible property, real and personal, within the territorial limits of the City, and the balance shall be payable from ad valorem taxes which may be levied without limitation as to rate or amount upon all the taxable tangible property, real and personal, within the territorial limits of the City.

Section 203. Details of the Bonds. The Bonds shall consist of fully registered certificated bonds without coupons in the denominations of $5,000 or any integral multiple thereof. The Bonds shall be substantially in the form described in Article IV hereof and Exhibit A attached hereto and shall be subject to registration, transfer and exchange as provided in Section 206 hereof. All of the Bonds shall be dated March 1, 1996, shall become due on September 1 (the "Principal Payment Dates") in the years and in the principal amounts (subject to optional redemption prior to maturity as provided in Article III hereof) and shall bear interest at the respective rates per annum as follows:

SERIES 1996A SERIAL BONDS

Maturity Date	Principal Amount	Interest Rate	Maturity Date	Principal Amount	Interest Rate
1996	$ 40,000	3.50%	2004	$900,000	4.35%
1997	85,000	3.60	2005	865,000	4.45
1998	100,000	3.70	2006	890,000	4.55
1999	230,000	3.80	2007	925,000	4.70
2000	650,000	3.90	2008	595,000	4.80
2001	745,000	4.00	2009	475,000	4.90
2002	1,145,000	5.00	2010	400,000	5.00
2003	875,000	4.25			

SERIES 1996A TERM BONDS

Maturity Date	Principal Amount	Interest Rate
2015	$2,175,000	5.00%

SERIES 1996B BONDS

Maturity Date	Principal Amount	Interest Rate	Maturity Date	Principal Amount	Interest Rate
1996	$315,000	3.50%	2004	$545,000	4.35%
1997	545,000	3.60	2005	545,000	4.45
1998	545,000	3.70	2006	545,000	4.55
1999	545,000	3.80	2007	500,000	4.70
2000	545,000	3.90	2008	500,000	4.80
2001	545,000	4.00	2009	500,000	4.90
2002	545,000	4.10	2010	500,000	5.00
2003	545,000	4.25			

The Bonds shall bear interest at the rates aforesaid (computed on the basis of a 360-day year composed of twelve 30-day months) from the date thereof or from the most recent interest payment date to which interest has been paid or duly provided for, payable semiannually on March 1 and September 1 in each year, beginning on September 1, 1996 (the "Interest Payment Dates"), to the registered owners whose names appear on the books maintained by the Bond Registrar at the close of business on the 15th day of the month immediately preceding the Interest Payment Dates (the "Record Dates").

Section 204. Designation of Paying Agent and Bond Registrar. UMB Bank Kansas in the City of Kansas City, Kansas, is hereby designated as the City's paying agent for the payment of principal of, premium, if any, and interest on the Bonds and bond registrar with respect to the registration, transfer and exchange of Bonds (the "Paying Agent" and "Bond Registrar").

The Mayor of the City and the City Clerk of the City are hereby authorized and empowered to execute on behalf of the City an agreement with the Paying Agent and Bond Registrar to act as Bond Registrar and Paying Agent for the Bonds.

Section 205. Method and Place of Payment of Bonds. The principal of, premium, if any, and interest on the Bonds shall be payable in lawful money of the United States of America by check or draft of the Paying Agent.

The principal of and premium, if any, on the Bonds shall be payable at the office of the Paying Agent upon presentation and surrender of such Bonds as they respectively become due.

The interest on the Bonds shall be payable to the order of the registered owners thereof mailed by the Paying Agent to the addresses of such registered owners as they appear on the registration books maintained by the Bond Registrar or at such other address provided in writing by such registered owner to the Bond Registrar prior to the Record Dates.

The Paying Agent and Bond Registrar shall keep in its office a record of payment of principal of, premium, if any, and interest on the Bonds.

Section 206. Registration, Transfer and Exchange of Bonds. The City covenants that it will, as long as any of the Bonds herein authorized remain outstanding, cause to be kept at the office of the Bond Registrar books for the registration, transfer and exchange of Bonds as herein provided.

Upon presentation of the necessary documents as hereinafter described, the Bond Registrar shall transfer or exchange any Bond(s) for new Bond(s) in an authorized denomination of the same series and maturity and for the same aggregate principal amount as the Bond(s) presented for transfer or exchange.

All Bonds presented for transfer or exchange shall be accompanied by a written instrument or instruments of transfer or authorization for exchange, in a form and with guarantee of signature satisfactory to the Bond Registrar, duly executed by the registered owner thereof or by the registered owner's duly authorized agent. In addition, all Bonds presented for transfer or exchange shall be surrendered to the Bond Registrar for cancellation.

Prior to delivery of the new Bond(s) to the transferee, the Bond Registrar shall register the same in the registration books kept by the Bond Registrar for such purpose and shall authenticate each Bond.

The City shall provide for the payment out of the Bond proceeds of the fees of the Bond Registrar for registration and transfer of the Bonds and the cost of printing a reasonable supply of registered bond blanks. Any additional costs or fees that might be incurred in the secondary market, other than fees of the Bond Registrar, are the responsibility of the bondowners.

The City, the Bond Registrar and the Paying Agent may deem and treat the person in whose name any Bond shall be registered as the absolute owner of such Bond, whether such Bond shall be overdue or not, for the purpose of receiving payment of, or on account of, the principal of and redemption premium, if any, and interest on said Bond and for all other purposes, and all such payments so made to any such registered owner or upon such registered owner's order shall be valid and effectual to satisfy and discharge the liability upon such Bond to the extent of the sum or sums so paid, and neither the City nor the Bond Registrar nor the Paying Agent shall be affected by any notice to the contrary, but such registration may be changed as herein provided.

The Bond Registrar shall not be required to register, transfer or exchange Bonds for a period extending from the Record Date to the immediately following Interest Payment Date for the Bonds or to register, transfer or exchange any Bonds selected for redemption in whole or in part subsequent to the date notice of such redemption is given.

Section 207. Immobilization of Bonds by the Depository. (a) The Bonds shall be initially issued as separately authenticated fully registered bonds, and one Bond shall be issued in the principal amount of each stated maturity of each series of the Bonds. Upon initial issuance, the ownership of such Bonds shall be registered in the bond register in the name of Cede & Co., as nominee of the Depository. The Bond Registrar and the City may treat the Depository (or its nominee) as the sole and exclusive owner of Bonds registered in its name for the purposes of payment of the principal of or interest on the Bonds, selecting the Bonds or portions thereof to be redeemed, giving any notice permitted or required to be given to registered owners of Bonds under this Ordinance, registering the transfer of Bonds, and for all other purposes whatsoever; and neither the Bond Registrar nor the City shall be affected by any notice to the contrary. Neither the Bond Registrar nor the City shall have any responsibility or obligation to any Participant, any person claiming a beneficial ownership interest in the Bonds under or through the Depository or any Participant, with respect to the accuracy of the records maintained by the Depository or any Participant, with respect to the payment by the Depository or any Participant of any amount with respect to the principal of or interest on the Bonds, with respect to any notice which is permitted or required to be given to owners of Bonds under this Ordinance, with respect to the selection by the Depository or any Participant of any person to receive payment in the event of a partial redemption of the Bonds, or with respect to any consent given or other action taken by the Depository as registered owner of the Bonds. So long as any Bond issued hereunder

is registered in the name of Cede & Co., as nominee of the Depository, the Bond Registrar shall pay all principal of and interest on such Bond, and shall give all notices with respect to such Bond, only to Cede & Co. in accordance with the Representation Letter, and all such payments shall be valid and effective to fully satisfy and discharge the City's obligations with respect to the principal of and interest on the Bonds to the extent of the sum or sums so paid. No person other than the Depository (or its duly authorized agent) shall receive an authenticated bond for any separate stated maturity evidencing the obligation of the City to make payments of principal and interest. Upon delivery by the Depository to the Bond Registrar of written notice to the effect that the Depository has determined to substitute a new nominee in place of Cede & Co., the Bonds will be transferable to such new nominee in accordance with paragraph (d) and Section 206 hereof.

(b) In the event the City determines that it is in the best interest of the Beneficial Owners that they be able to obtain bond certificates, the City may notify the Depository and the Bond Registrar, whereupon the Depository shall notify the Participants of the availability through the Depository of bond certificates. In such event, the Bonds will be transferable in accordance with paragraph (d) and Section 206 hereof. The Depository may determine to discontinue providing its services with respect to the Bonds at any time by giving notice to the City and the Bond Registrar and discharging its responsibilities with respect thereto under applicable law. In such event the Bonds will be transferable in accordance with paragraph (d) and Section 206 hereof.

(c) The Mayor and City Clerk are hereby authorized to execute and deliver the Representation Letter to the Depository in the form attached hereto as Exhibit B with such changes, omissions, insertions and revisions as the Mayor and the City Clerk shall deem advisable, and such execution of the Representation Letter by the Mayor and City Clerk shall be conclusive evidence of such approval. The Representation Letter sets forth certain matters with respect to, among other things, notices, consents and approvals by registered owners of the Bonds and Beneficial Owners and payments on the Bonds. The Bond Registrar shall have the same rights with respect to its actions thereunder as it has with respect to its action under this Ordinance.

(d) In the event that any transfer or exchange of Bonds is permitted under paragraph (a) or (b) hereof, such transfer or exchange shall be accomplished upon receipt by the Bond Registrar of the Bonds to be transferred or exchanged and appropriate instruments of transfer to the permitted transferee in accordance with the provisions of Section 206 of this Ordinance. In the event bond certificates are issued to holders other than Cede & Co., its successor as nominee for the Depository as holder of all the Bonds, or another securities depository as holder of all the Bonds, the provisions of this Ordinance shall also apply to all matters relating thereto, including, without limitation, the printing of such certificates and the method of payment of principal of and interest on such certificates.

Section 208. Surrender and Cancellation of Bonds. Whenever any outstanding Bond shall be delivered to the Bond Registrar for cancellation pursuant to this Ordinance, upon payment of the principal amount thereof and interest thereon or for replacement pursuant to

this Ordinance, such Bond shall be cancelled by the Bond Registrar and the cancelled Bond shall be returned to the City.

Section 209. Mutilated, Lost, Stolen or Destroyed Bonds. In the event any Bond is mutilated, lost, stolen or destroyed, the City may execute and the Bond Registrar may authenticate a new Bond of like date, series, maturity, denomination and interest rate as that mutilated, lost, stolen or destroyed; provided, that in the case of any mutilated Bond, such mutilated Bond shall first be surrendered to the City or the Bond Registrar, and, in the case of any lost, stolen or destroyed Bond there shall be first furnished to the Bond Registrar and the City evidence of such loss, theft or destruction and an indemnity satisfactory to them. In the event any such Bond shall have matured, instead of issuing a duplicate Bond, the City and Bond Registrar may pay the same without surrender thereof. The City and Bond Registrar may charge to the registered owner of such Bond their reasonable fees and expenses in connection with replacing such Bond or Bonds mutilated, stolen, lost or destroyed.

Section 210. Execution, Registration and Delivery of the Bonds. Each of the Bonds, including any Bonds issued in exchange or as substitutions for the Bonds initially delivered, shall be signed by the manual or facsimile signature of the Mayor of the City and attested by the manual or facsimile signature of the City Clerk and shall have the corporate seal of the City affixed thereto or imprinted thereon. In case any officer whose signature or facsimile thereof appears on any Bonds shall cease to be such officer before the delivery of the Bonds, such signature or facsimile thereof shall nevertheless be valid and sufficient for all purposes, the same as if such person had remained in office until delivery. Any Bond may be signed by such persons who at the actual time of the execution of such Bond shall be the proper officers to sign such Bond, although at the date of such Bond such persons may not have been such officers.

The Mayor of the City and the City Clerk are hereby authorized and directed to prepare and execute the Bonds in the manner hereinbefore specified, to cause the Bonds to be registered in the offices of the City Clerk and the State Treasurer of the State of Kansas as provided by law, and, when duly executed and registered, to deliver the Bonds to the Underwriters, upon receipt by the City of the purchase price of the Bonds as provided in the Bond Purchase Agreement herein identified and approved. The Mayor of the City and the City Clerk are also hereby further authorized to enter into an agreement with a depository trust company to have the executed, authenticated Bonds held in safe keeping prior to their delivery to the Underwriters.

The Bonds shall have endorsed thereon a Certificate of Authentication substantially in the form set forth in Exhibit A attached hereto, which shall be executed by the manual or facsimile signature of the Bond Registrar. No Bond shall be entitled to any security or benefit under the Ordinance nor shall it be valid or obligatory for any purpose unless and until such Certificate of Authentication shall have been duly executed by the Bond Registrar. Such executed Certificate of Authentication upon any Bond shall be conclusive evidence that such Bond has been duly authenticated and delivered under the Ordinance. The Certificate

of Authentication on any Bond shall be deemed to have been duly executed if signed by any authorized officer or employee of the Bond Registrar, but it shall not be necessary that the same officer or employee sign the Certificate of Authentication on all of the Bonds that may be issued hereunder at any one time.

ARTICLE III

Section 301. Redemption of Bonds. The Bonds shall be subject to redemption prior to maturity only as provided in this Section 301.

(a) Optional Redemption. Bonds of each series maturing on September 1, 2007 and thereafter shall be subject to redemption and may be called for redemption and payment prior to maturity on September 1, 2006, and thereafter, in whole by series on any date or in part on any Interest Payment Date at the redemption price of 100% of the principal amount thereof, plus accrued interest thereon to the date fixed for redemption, without premium.

Anything herein contained to the contrary notwithstanding, the City reserves the right to elect to redeem Bonds of either series pursuant to the foregoing optional redemption provisions without any obligation to redeem Bonds of the other series or to redeem Bonds of each series in such principal amounts as, in each instance, the City in its sole discretion shall determine. In the case of a partial redemption of Bonds, the City may select Bonds of any particular maturity or maturities in such amounts as in its sole discretion it shall determine.

(b) Mandatory Redemption of Series 1996A Term Bonds. The Series 1996A Bonds bearing a stated maturity of September 1, 2015, shall be subject to mandatory redemption and payment prior to their stated maturity and shall be redeemed on September 1, 2011, and on September 1 of each year thereafter to and including September 1, 2014, at the redemption price of 100% of the principal amount so redeemed plus accrued interest thereon to the redemption date, without premium, in the following principal amounts:

Redemption Date	Amount Redeemed
September 1, 2011	$420,000
September 1, 2012	445,000
September 1, 2013	465,000
September 1, 2014	490,000

(leaving $355,000 principal amount of such Series 1996A Bonds to be paid at stated maturity on September 1, 2015).

The Paying Agent and Bond Registrar shall each year in which such Series 1996A Bonds are to be redeemed pursuant to the terms of this subparagraph

(b) make timely selection of such Series 1996A Bonds or portions thereof to be so redeemed and shall give notice thereof as provided herein without further instructions from the City.

At the election and direction and instruction of the City, moneys deposited in the Principal and Interest Fund may be used at any time after September 1, 2010 to purchase Series 1996A Bonds maturing on September 1, 2015, in the open market at a price not in excess of 100% of the principal amount thereof and to pay interest accrued on such bonds so purchased at the specified rate thereon to the date of purchase.

At its option, to be exercised on or before the forty-fifth day next preceding September 1 in the years 2011 through 2014, inclusive, the City may: (i) deliver to the Paying Agent and Bond Registrar for cancellation Series 1996A Bonds having a stated maturity of September 1, 2015 in any aggregate principal amount desired, or (ii) receive a credit in respect to the mandatory redemption obligation of the City under this Section 301 for any Series 1996A Bonds having a stated maturity of September 1, 2015 which prior to such date have been purchased or redeemed (other than through the operation of the requirements of subparagraph (b) above) and cancelled by the Paying Agent and Bond Registrar and not theretofore applied as a credit against the mandatory redemption obligation under this Section 301. Each Series 1996A Bond having a stated maturity of September 1, 2015 so delivered or previously purchased or redeemed as described in the immediately preceding sentence shall be credited at 100% of the principal amount thereof against the obligation of the City to redeem Series 1996A Bonds on the next succeeding mandatory redemption date pursuant to subparagraph (b) of this Section 301 and any excess of such amount shall be credited on future mandatory redemption obligations for such Bonds pursuant to this Section 301 in chronological order. If the City intends to exercise the option granted by clauses (i) or (ii) above, the City shall, on or before the forty-fifth day next preceding each September 1 in the years 2011 through 2014, inclusive, furnish the Paying Agent and Bond Registrar a certificate signed by a duly authorized officer of the City indicating to what extent said clauses (i) and (ii) are to be complied with in respect to such mandatory redemption requirement.

Section 302. Notice of Redemption. In the event the City shall elect to redeem and pay any of the Bonds prior to the maturity thereof pursuant to subparagraph (a) of Section 301 hereof, the City shall give written notice of its intention to redeem and pay said Bonds on a specified date, the same being described by number, series and maturity, said notice to be mailed by prepaid United States registered or certified mail addressed to the Paying Agent and Bond Registrar, the Depository, the State Treasurer of the State of Kansas and the Underwriters, said notice to be mailed not less than 45 days prior to the redemption date.

The Paying Agent and Bond Registrar will send notice of redemption of Bonds to be redeemed pursuant to Section 301 hereof by first class mail to the registered owners

of such Bonds as are to be redeemed, said notices to be mailed not less than 30 days prior to the date fixed for redemption.

Section 303. Selection of Bonds to Be Redeemed. Bonds shall be redeemed only in the principal amount of $5,000 or any integral multiple thereof. When less than all of the outstanding Bonds of a given series are to be redeemed and paid prior to maturity, the Bonds of the series and the particular maturities of Bonds to be redeemed shall be determined by the City in its sole discretion, Bonds of less than a full maturity to be selected by the Paying Agent and Bond Registrar by lot in $5,000 units of face value in such equitable manner as the Paying Agent and Bond Registrar may determine.

In the case of a partial redemption of Bonds by lot when Bonds of denominations greater than $5,000 are then outstanding, then for all purposes in connection with such redemption each $5,000 of face value shall be treated as though it were a separate Bond of the denomination of $5,000. If it is determined that one or more, but not all, of the $5,000 units of face value represented by any fully registered Bond is selected for redemption, then upon notice of intention to redeem such $5,000 unit or units, the owner of such fully registered Bond or the owner's duly authorized agent shall forthwith present and surrender such Bond to the Paying Agent and Bond Registrar (1) for payment of the redemption price (including the interest to the date fixed for redemption) of the $5,000 unit or units of face value called for redemption, and (2) for exchange, without charge to the owner thereof, for a new Bond or Bonds of the same series and maturity, and in the aggregate principal amount of the unredeemed portion of the principal amount of such fully registered Bond. If the owner of any such fully registered Bond of a denomination greater than $5,000 shall fail to present such Bond to the Paying Agent and Bond Registrar for payment and exchange as aforesaid, such Bond shall, nevertheless, become due and payable on the redemption date to the extent of the $5,000 unit or units of face value called for redemption (and to that extent only).

Section 304. Effect of Call for Redemption. Whenever any Bond is called for redemption and payment as provided in this Article, all interest on such Bond shall cease from and after the date for which such call is made, provided funds are available for its payment at the price hereinbefore specified.

ARTICLE IV

FORM OF THE BONDS

Section 401. Form of Bonds. The Bonds shall be printed in accordance with the format required by the Attorney General of the State of Kansas and shall contain information and recitals substantially as set forth in Exhibit A attached hereto or as may be required by the Attorney General pursuant to the Notice of Systems of Registration for Kansas Municipal Bonds, 2 Kan. Reg. 921 (1983) in accordance with the Kansas Bond Registration Law, K.S.A. 10-620 to 10-632, inclusive, as amended.

ARTICLE V

ESTABLISHMENT OF FUNDS; APPROVAL OF ESCROW AGREEMENT

Section 501. Creation of Funds. There are hereby created and ordered to be established in the treasury of the City the following separate funds to be known respectively as follows:

(a) Principal and Interest Fund for the City of Leawood, Kansas General Obligation Refunding and Improvement Bonds, Series 1996 (the "Principal and Interest Fund");

(b) Series 1996 Improvement Fund (the "Improvement Fund");

(c) Series 1996 Cost of Issuance Fund (the "Cost of Issuance Fund"); and

(d) City of Leawood, Kansas, Escrow Fund for General Obligation Improvement Bonds, Series 1990, Series 1991, Series 1992B and Series 1994 (the "Escrow Fund").

Section 502. Administration of Funds. The Principal and Interest Fund and the Improvement Fund established pursuant to the authority of Section 501 hereof shall be maintained and administered by the City solely for the purposes and in the manner as provided in this Ordinance so long as any of the Bonds remain outstanding and unpaid.

The Cost of Issuance Fund and the Escrow Fund established pursuant to the authority of Section 501 hereof shall be maintained and administered by the Escrow Trustee for the purposes and in the manner provided in the Escrow Agreement.

Section 503. Approval of Escrow Agreement. The Escrow Trust Agreement dated as of March 1, 1996, between the City and UMB Bank Kansas, as escrow trustee thereunder (the "Escrow Trustee"), in substantially the form attached hereto as Exhibit C, including the Issuer's Instruction Agreement appended thereto, is hereby approved, and said Escrow Agreement is hereby incorporated into this Ordinance as though fully set forth herein. The Mayor of the City is hereby authorized and directed to execute the Escrow Agreement and the Issuer's Instruction Agreement with such changes, insertions and modifications thereto as in the opinion of the Mayor with advice of counsel are necessary, appropriate and desirable. The City Clerk is hereby authorized and directed to attest to the signature of the Mayor and affix the City's seal thereto, such execution and attestation being conclusive as to the approval, correctness and completeness of said Escrow Agreement and the Issuer's Instruction Agreement.

The Escrow Reinvestment Agreement is hereby approved in substantially the form appended to the Escrow Agreement with such changes, insertions and modifications thereto

as in the opinion of the Mayor with advice of counsel are necessary, appropriate and desirable.

ARTICLE VI

APPLICATION OF BOND PROCEEDS

Section 601. Disposition of Bond Proceeds and Other Moneys. The proceeds received from the sale of the Bonds, including any premium and accrued interest thereon, shall be deposited simultaneously with the delivery of the Bonds, as follows:

(a) There shall be deposited in the Principal and Interest Fund any amount received on account of accrued interest on the Bonds.

(b) There shall be transferred to the Escrow Trustee for deposit in the Cost of Issuance Fund the aggregate sum of $268,493.76 (less any amount retained by the Underwriter as its underwriting fee), representing proceeds of the Series 1996A Bonds of $164,474.36 and proceeds of the Series 1996B Bonds of $104,019.40.

(c) There shall be transferred to the Escrow Trustee for deposit in the Escrow Fund, proceeds of the sale of the Series 1996A Bonds in the amount of $10,939,605.29.

(d) The entire remaining balance of the proceeds of the Bonds (being entirely proceeds of the Series 1996B Bonds) in the amount of $7,660,980.60 shall be deposited in the Improvement Fund.

Section 602. Application of Moneys in the Improvement Fund. Moneys in the Improvement Fund shall be separately accounted for and attributed to each of the individual Series 1996 Improvements and shall be used solely to pay the cost of the Series 1996 Improvements, including the retirement of temporary notes of the City previously issued to provide interim financing for the Series 1996 Improvements, and, in the event funds on deposit in the Cost of Issuance Fund shall be insufficient for the purposes thereof, to pay costs of issuance of the Bonds. Upon completion of the Series 1996 Improvements and payment of all costs thereof, any moneys remaining in the Improvement Fund shall be deposited into the Principal and Interest Fund.

Section 603. Application of Moneys in the Cost of Issuance Fund. Moneys in the Cost of Issuance Fund shall be used and applied by the Escrow Trustee as provided in the Escrow Agreement to pay the cost of issuing the Bonds, including all printing, signing and mailing expenses, legal fees, accounting expenses, fees for ratings received on the Bonds and any fiscal fees incurred in marketing the Bonds. Any moneys remaining in the Cost of Issuance Fund on April 11, 1996 in excess of amounts for application to future payments as provided in the Escrow Agreement, shall be transferred to the Improvement Fund.

Section 604. Redemption of Refunded Bonds. The governing body hereby finds it necessary and advisable and the City hereby elects to redeem the following described Refunded Bonds bearing the stated maturities (all dates inclusive) on the dates and in the amounts as follows:

	Description	Stated Maturity Years	Principal Amount	Redemption Date
(a)	Refunded Series 1990 Bonds	1999-2002	$ 460,000	September 1, 1998
(b)	Refunded Series 1991 Bonds	2000-2007	$2,790,000	September 1, 1999
(c)	Refunded Series 1992B Bonds	2001-2008	$1,080,000	September 1, 2000
(d)	Refunded Series 1994 Bonds	2002-2016	$6,140,000	September 1, 2001

The Escrow Trustee is hereby authorized and directed to give notice of the City's intention to redeem the aforedescribed Refunded Bonds by publication of notices as provided in the Escrow Agreement. The Mayor and City Clerk and other officers of the City are hereby authorized to take such further and additional actions as may be necessary to effect the redemption of the Refunded Bonds as aforesaid for and on behalf and as the act and deed of the City.

ARTICLE VII

PAYMENT OF BONDS

Section 701. Levy of Taxes to Pay Bonds. The full faith, credit and resources of the City are hereby pledged to secure the payment of the principal of and interest on the Bonds as they severally become due and payable.

The governing body of the City shall make provision for the payment of said principal and interest on the Series 1996A Bonds by levying and collecting special assessments on property benefitted by the Prior Improvements financed in part with the proceeds of the Refunded Bonds, and to the extent of the City's portion of the cost of said Prior Improvements and to the extent such special assessments shall not be so collected, by levying and collecting an annual tax on all taxable tangible property within the territorial limits of the City in amounts sufficient to pay the installments of said principal and interest on the Series 1996A Bonds as the same accrue and become payable.

The governing body of the City shall further make provision for the payment of said principal and interest on the Series 1996B Bonds by levying and collecting special assessments on property benefited by the Series 1996 Benefit District Improvements, and to the extent of the City's portion of the cost of said Series 1996 Improvements and to the extent such special assessments on property benefitted by the Series 1996 Benefit District Improvements shall not be so collected, by levying and collecting an annual tax on all taxable tangible property within the territorial limits of the City in amounts sufficient to pay the installments of said principal and interest on the Series 1996 Bonds as the same accrue and become payable.

Section 702. Transfer of Funds to Paying Agent. The Treasurer of the City is hereby authorized and directed to withdraw from the Principal and Interest Fund and transfer to the Paying Agent sums sufficient to pay the principal of and interest on the Bonds and the fees of the Paying Agent and Bond Registrar when the same become due. If, through lapse of time or otherwise, the owners of Bonds shall no longer be entitled to enforce payment of their obligations, it shall be the duty of the Paying Agent forthwith to return said funds to the City. All moneys deposited with the Paying Agent shall be deemed to be deposited in accordance with and subject to all of the provisions contained in this Ordinance.

ARTICLE VIII

MISCELLANEOUS PROVISIONS

Section 801. Sale of Bonds to Underwriters; Approval of Bond Purchase Agreement; Approval of Official Statement; Continuing Disclosure. The sale of the Bonds to the Underwriters at a purchase price of 100% of the principal amount of the Bonds plus original issue premium of $9,079.65 and accrued interest thereon to the date of delivery thereof to the Underwriters and providing for an underwriting fee of 1.00% of par is hereby approved. The Bond Purchase Agreement between the City and the Underwriters in substantially the form attached hereto as Exhibit D is hereby approved, and the Mayor and City Clerk are hereby authorized and directed to execute and attest, respectively, the Bond Purchase Agreement for and on behalf and as the act and deed of the City.

The governing body hereby ratifies and approves the Preliminary Official Statement with respect to the Bonds, dated February 8, 1996, in the form presented to the governing body, and hereby deems said Preliminary Official Statement "final" as of its date for purposes of the requirements of Rule 15c2-12(b)(1) of the Securities and Exchange Commission, except for the omission of certain information permitted by said rule to be omitted therefrom.

Distribution of the final Official Statement relating to the Bonds in substantially the form presented to the governing body of the City and the use thereof by the Underwriters of the Bonds is hereby approved, and the Mayor of the City and the City Clerk are hereby authorized to execute such Official Statement on behalf of the City, with such corrections, omissions, insertions or changes as they may approve.

The City hereby covenants and agrees that it will comply with and carry out all of the provisions of the Continuing Disclosure Certificate, the form of which is attached hereto as Exhibit E. Notwithstanding any other provision of this Ordinance to the contrary, failure by the City to comply with the Continuing Disclosure Certificate shall not be considered a default or an event of default hereunder or on the Bonds; however, any registered owner of the Bonds or Participating Underwriter may take such actions as may be necessary and appropriate, including seeking mandamus or specific performance by court order, to cause the City to comply with its obligations under the Continuing Disclosure Certificate and this Section 801.

Section 802. Special Tax Covenants. The City covenants to comply with each and every provision of the Internal Revenue Code of 1986 and the rules and regulations promulgated thereunder (the "Code"), which is or may be applicable to the Bonds or state and local obligations of the same character as the Bonds authorized and issued hereunder; provided, that, the City shall not be required to comply with any such provision if the City shall be provided with an opinion of nationally recognized bond counsel to the effect that such compliance is not required and to the effect that the failure to comply with any such provision will not cause interest on the Bonds to be subject to federal income taxation.

In particular, the City shall complete the construction of the Series 1996 Improvements that are financed with the proceeds of the Bonds not later than that day which is three years after the earlier of (i) the date of issue of the Bonds or (ii) the date construction of such Series 1996 Improvements began.

The City further covenants and agrees that no portion of the gross proceeds of the Bonds will be used (on a basis different from use by members of the general public of the Series 1996 Improvements) directly or indirectly in any trade or business carried on by any person (including exempt persons) other than the City, any other political subdivision of the State of Kansas or any governmental unit of the State of Kansas, or to make any loan to any such person.

The City will comply with all applicable information reporting requirements of the Code.

Section 803. Arbitrage Covenant. The City covenants and agrees that it will use the proceeds of the Bonds as soon as practicable and with all reasonable dispatch for the purpose for which the Bonds are issued as hereinbefore set forth, and that no part of the proceeds of the Bonds shall be invested in any securities or obligations except for the temporary period pending such use, nor used, at any time, directly or indirectly, in a manner which, if such use had been reasonably anticipated on the date of issuance of the Bonds, would have caused any of the Bonds to be or become "arbitrage bonds" within the meaning of Section 148 of the Code.

The City will abide by any applicable arbitrage rebate requirements of the Code; provided, that, the City shall not be required to abide by any such requirements if the City

is provided with an opinion of nationally recognized bond counsel to the effect that such compliance is not required and to the effect that the failure of the City to abide by any such requirements will not cause the interest on the Bonds to be or become subject to federal income taxation.

Section 804. Authority to Redeem Outstanding Temporary Notes. The governing body hereby finds and determines that it is necessary and advisable to redeem and prepay the following described outstanding temporary notes of the City:

Project	Date Issued	Amount	Maturity Date
Series 115 - Mission Road, College Boulevard to I-435	October 10, 1995	$900,000	July 9, 1996
Series 129 - 143rd Street, Mission - 1320 Feet East	October 10, 1995	400,000	July 9, 1996
Series 134 - State Line Road, Phase II	October 10, 1995	300,000	July 9, 1996
Series 136 - State Line Road, Phase III	October 10, 1995	800,000	July 9, 1996
Series 142 - Bell Drive & Iron Horse Drive	October 10, 1995	500,000	July 9, 1996

The City Clerk is hereby authorized to give notice of the City's intention to redeem and prepay the aforedescribed temporary notes on or prior to March 13, 1996, by publication of notices to the holders thereof, substantially in the form attached as Exhibit F hereto, at least once in the official newspaper of the City not less than 10 days prior to the date fixed for such redemption and prepayment.

Section 805. Severability. If any section or other part of this Ordinance shall for any reason be held invalid, the invalidity thereof shall not affect the validity of the other provisions of this Ordinance.

Section 806. Governing Law. This Ordinance shall be governed exclusively by and construed in accordance with the applicable laws of the State of Kansas.

Section 807. Effective Date. This Ordinance shall take effect and be in full force from and after its adoption by the governing body of the City and publication in the official newspaper of the City.

PASSED by the governing body of the City of Leawood, Kansas this 20th day of February, 1996.

Approved by the Mayor this 20th day of February, 1996.

(Seal)

Marcia Rinehart, Mayor

ATTEST:

Martha Heizer, City Clerk

APPROVED AS TO FORM AND CONTENT:

City Attorney

of the series and the particular maturities of Bonds to be redeemed shall be determined by the City in its sole discretion, Bonds of less than a full maturity to be selected by the Paying Agent and Bond Registrar by lot in $5,000 units of face value in such equitable manner as the Paying Agent and Bond Registrar may determine.

In the case of a partial redemption of Bonds by lot when Bonds of denominations greater than $5,000 are then outstanding, then for all purposes in connection with such redemption each $5,000 of face value shall be treated as though it were a separate Bond of the denomination of $5,000. If it is determined that one or more, but not all, of the $5,000 units of face value represented by any fully registered Bond is selected for redemption, then upon notice of intention to redeem such $5,000 unit or units, the owner of such fully registered Bond or the owner's duly authorized agent shall forthwith present and surrender such Bond to the Paying Agent and Bond Registrar (1) for payment of the redemption price (including the interest to the date fixed for redemption) of the $5,000 unit or units of face value called for redemption, and (2) for exchange, without charge to the owner thereof, for a new Bond or Bonds of the same series and maturity, and in the aggregate principal amount of the unredeemed portion of the principal amount of such fully registered Bond. If the owner of any such fully registered Bond of a denomination greater than $5,000 shall fail to present such Bond to the Paying Agent and Bond Registrar for payment and exchange as aforesaid, such Bond shall, nevertheless, become due and payable on the redemption date to the extent of the $5,000 unit or units of face value called for redemption (and to that extent only).

Section 304. Effect of Call for Redemption. Whenever any Bond is called for redemption and payment as provided in this Article, all interest on such Bond shall cease from and after the date for which such call is made, provided funds are available for its payment at the price hereinbefore specified.

ARTICLE IV

FORM OF THE BONDS

Section 401. Form of Bonds. The Bonds shall be printed in accordance with the format required by the Attorney General of the State of Kansas and shall contain information and recitals substantially as set forth in Exhibit A attached hereto or as may be required by the Attorney General pursuant to the Notice of Systems of Registration for Kansas Municipal Bonds, 2 Kan. Reg. 921 (1983) in accordance with the Kansas Bond Registration Law, K.S.A. 10-620 to 10-632, inclusive, as amended.

ARTICLE V

ESTABLISHMENT OF FUNDS;
APPROVAL OF ESCROW AGREEMENT

Section 501. Creation of Funds. There are hereby created and ordered to be established in the treasury of the City the following separate funds to be known respectively as follows:

(a) Principal and Interest Fund for the City of Leawood, Kansas General Obligation Refunding and Improvement Bonds, Series 1996 (the "Principal and Interest Fund");

(b) Series 1996 Improvement Fund (the "Improvement Fund");

(c) Series 1996 Cost of Issuance Fund (the "Cost of Issuance Fund"); and

(d) City of Leawood, Kansas, Escrow Fund for General Obligation Improvement Bonds, Series 1990, Series 1991, Series 1992B and Series 1994 (the "Escrow Fund").

First published in The Johnson County Sun, Friday, February 23,1996

ORDINANCE NO. 1558

AN ORDINANCE AUTHORIZING THE ISSUANCE OF $18,860,000 PRINCIPAL AMOUNT OF GENERAL OBLIGATION REFUNDING AND IMPROVEMENT BONDS, SERIES 1996, OF THE CITY OF LEAWOOD, KANSAS, FOR THE PURPOSE OF PROVIDING FUNDS TO REFUND CERTAIN OUTSTANDING GENERAL OBLIGATION BONDS OF THE CITY AND TO FINANCE THE COST OF CERTAIN IMPROVEMENTS WITHIN THE CITY; PRESCRIBING THE FORM AND DETAILS OF SAID BONDS AND THE COVENANTS AND AGREEMENTS MADE BY THE CITY TO FACILITATE AND PROTECT THE PAYMENT THEREOF; MAKING PROVISION FOR THE COLLECTION OF AN ANNUAL TAX FOR THE PURPOSE OF PAYING THE PRINCIPAL OF AND INTEREST ON SAID BONDS AS THEY BECOME DUE; AND PROVIDING FOR EXECUTION OF CERTAIN AGREEMENTS IN CONNECTION THEREWITH.

WHEREAS, pursuant to K.S.A. 12-631a et seq., K.S.A. 12-685 et seq., K.S.A. 6a01 et seq., K.S.A 12-1301 et seq., and K.S.A. 12-1736 et seq., each as amended, and other provisions of the laws of the State of Kansas applicable thereto, by proceedings duly had, the City of Leawood, Kansas (the "City") has heretofore issued the following described general obligation bonds of the City:

(a) General Obligation Improvement Bonds, Series 1990-A, dated October 1, 1990, in the original principal amount of $1,848,653 (the "Series 1990 Bonds") pursuant to Ordinance No. 1186 of the City adopted October 2, 1990, of which Series 1990 Bonds in the aggregate principal amount of $880,000 remain outstanding and unpaid;

(b) General Obligation Improvement Bonds, Series 1991-A, dated

ing first
anager of
the State
ON COUNTY,
ternal

"Beneficial Owner" shall mean, whe
authorized, the person in whose name such bo
Bond by a Participant on the records of such

"Bond Registrar" means the UMB Ba
and its successors or assigns.

"Cede & Co." shall mean Cede & C
successor nominee of the Depository with re

"Continuing Disclosure Certificate" m
form attached hereto as Exhibit B.

"Cost of Issuance Fund" means the S
with the Escrow Trustee by Section 501 of t

"Depository" shall mean The Deposit

"Escrow Agreement" means the Escr
Escrow Trustee in the form attached hereto a

"Escrow Fund" means the City of
Obligation Improvement Bonds, Series 1990
established with the Escrow Trustee by Se
Agreement.

"Escrow Reinvestment Agreement"
between the Escrow Trustee and the Pro
Agreement.

"Escrow Trustee" means UMB Bank
its capacity as escrow trustee under the Escr

"Improvement Fund" means the Seri
501 of this Ordinance.

"Issuer's Instruction Agreement" mea
the City and the Provider in the form append

"Ordinance" means this Ordinance as
the terms hereof.

"Participant" shall mean any broker
which the Depository holds Bonds as securit

"Participating Underwriter" shall have
Disclosure Certificate.

"Paying Agent" means the UMB Ba
and its successors and assigns.

"Provider" means Chemical Bank, a
and permitted assigns.

"Principal and Interest Fund" means
Leawood, Kansas General Obligation Refun
by Section 501 of this Ordinance.

Representation Letter" shall mean th
Bond Registrar to the Depository with respec
to this Ordinance as Exhibit B.

"Underwriters" means George K. Ba

ARTI

AUTHORIZATIO

Section 201. Authorization of the B
directed to be issued in the principal amou
funds to refund the Refunded Bonds in adv
of the Series 1996 Improvements, as provid

The Bonds shall be designated "Ge
Bonds, Series 1996," and shall be composed
"General Obligation Refunding Bonds, Ser
of $11,095,000 (the "Series 1996A" Bonds)
Series 1996B", in the aggregate principal
Bonds").

Section 202. Security for the Bond
obligations of the City, and the full faith an
the principal of and interest on the Bonds a

The Series 1996A Bonds shall be
against properties benefited by the Prior I
of the Refunded Bonds and, if not so pai
without limitation as to rate or amount upo
within the territorial limits of the City, an
taxes which may be levied without limit
tangible property, real and personal, withi

0 times a
n said
e first
ffice of
atter.

shed in the
xecutive
made as
19 96,

19____

19____

ne Shaeler

Martasin
DTARY PUBLIC

J. MARTASIN
ARY PUBLIC
OF KANSAS